March 25, 1941. E. H. AYERS 2,236,282

CONTROLLER

Filed April 28, 1938

Fig. 1.

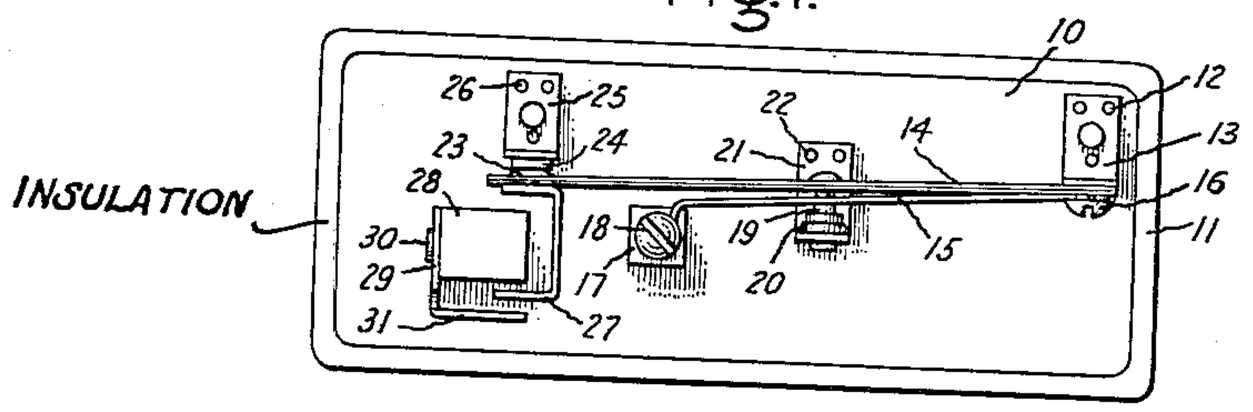

Fig. 2.

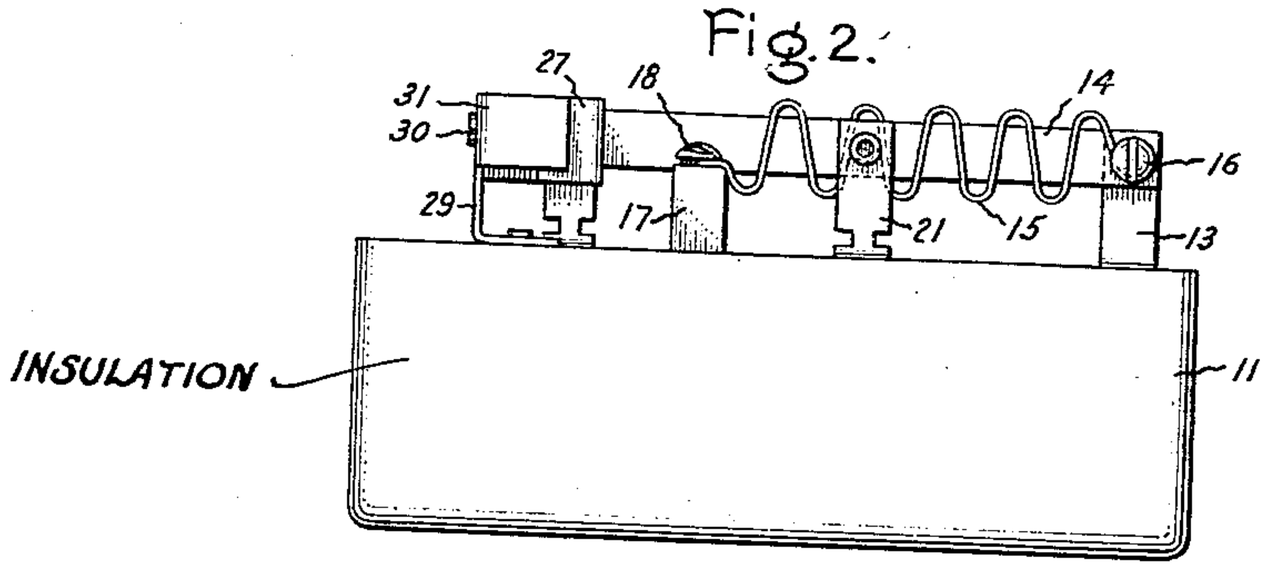

Fig. 3.

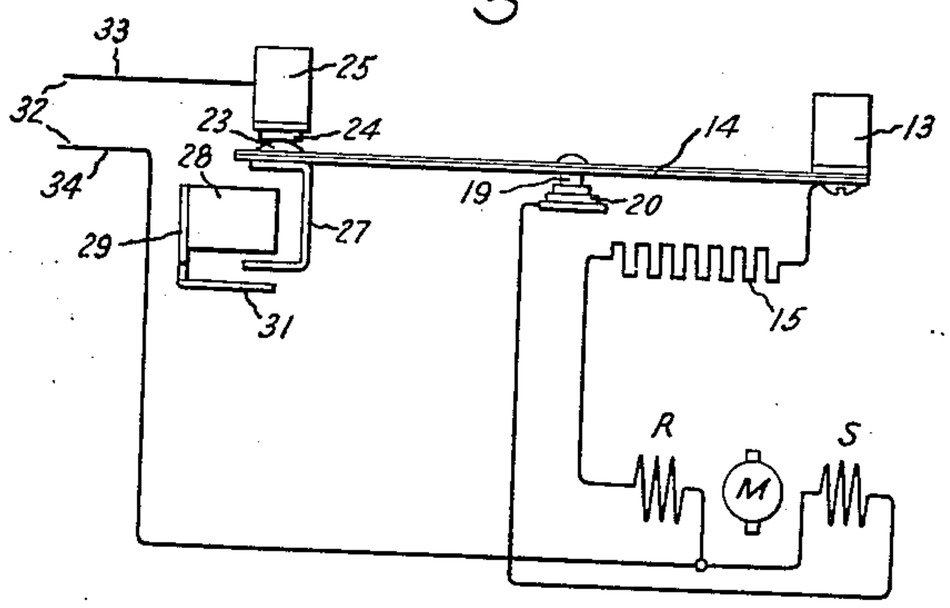

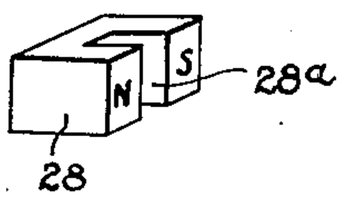

Fig. 4

Inventor:
Edgar H. Ayers,
by Harry E. Dunham
His Attorney

Patented Mar. 25, 1941

UNITED STATES PATENT OFFICE

2,236,282

CONTROLLER

Edgar H. Ayers, Schenectady, N. Y., assignor to General Electric Company, a corporation of New York

Application April 28, 1938, Serial No. 204,804

12 Claims. (Cl. 200—122)

My invention relates to controllers, more particularly to apparatus for controlling the starting circuit of an electric motor of the split-phase type and for protecting the motor from excessive current flow therethrough by reason of overload, and has for its object the provision of an extremely simple device of this character which has a minimum number of parts and which, accordingly, may be cheaply and easily manufactured.

It is well understood, of course, that it is necessary to provide means for insuring that the starting winding of the motor shall be energized during and only during the starting period. It is also highly desirable to protect the motor from excessive current both during running and stalled conditions. For successful operation of a combined starting relay and automatic resetting overload, the starting contacts of the starting relay must be closed ahead of or at the same time the overload contacts of the overload relay close. If this condition was not met, the motor would be placed on the line without its starting winding in the circuit, and the motor would not be ready to start when the overload contacts were closed.

To effect the desired control of motors of the split-phase type reliably, yet with a device which can be cheaply manufactured, I provide a controller having thermally responsive actuating means, such as a bimetallic strip, arranged to deflect in accordance with the current in the strip and a heating element in the motor circuit. Operable by this strip are starting and overload contacts normally in engagement and adapted to disengage upon a predetermined deflection of the strip. I provide magnetic means for retaining a portion of the bimetallic strip in an undeflected position to hold the overload contacts in engagement during normal operating conditions of the motor. The magnetic means I have provided, although I do not intend to be limited thereto, may consist of an armature having two arms spaced from but encompassing a permanent magnet, the armature being attached to the bimetallic strip and arranged to be attracted to either of two positions.

Another portion of the bimetallic strip is free to deflect to operate the starting contacts for removing the starting winding from the motor circuit after sufficient time has elapsed for the motor to come up to speed. In case the motor should overload for any reason, the bimetallic strip will deflect a further amount and overcome the magnetic restraint and open the overload contacts. When the overload contacts are opened, the armature moves to its other attracted position and retains these contacts in disengagement, until a cooling of the bimetallic strip recloses the starting contacts. Thereafter, the overload contacts automatically reset and permit the motor to start up again with the starting winding in the motor circuit.

For a more complete understanding of my invention, reference should be had to the accompanying drawing, in which Fig. 1 is a plan view of a controller embodying my invention; Fig. 2 is an elevational view of Fig. 1; Fig. 3 is a circuit diagram showing a controller embodying my invention connected in the circuit of a split-phase motor and Fig. 4 is a perspective view of a magnet used in a controller embodying my invention.

Referring to the drawing, I have shown my invention in one form as applied to the starting and running circuits of a split-phase motor, although it will be obvious that a controller of this character has broad application to general circuit control and overload protection. The controller is shown mounted on a base 10 of suitable insulating material which may form the top or cover of an insulated wire box or casing 11 into which the necessary circuit wires may be led and connected to terminals on the bottom face (not shown) of the base 10. Fastened to the base 10 by means of rivets 12, I provide an angular support member 13 having secured at the upper end thereof actuating means such as a bimetallic strip 14. The bimetallic strip 14 may be spaced above and may extend longitudinally of the base 10 being secured at one end to the support member 13 by suitable means, such as by welding, and may have its other end free for lateral deflection in response to changes in temperature in accordance with the heating of a heater element 15.

For heating the strip 14 in accordance with the intensity of the current in the motor circuit, I provide preferably the heating element 15 in the form of a resistance wire which is electrically connected to the fixed end of the strip 14 and is arranged adjacent but spaced from the strip 14 for the transmission of heat thereto. The strip 14 is of such material and cross section that heat is also generated in it by passage of current therethrough. The heater wire 15 is fastened to the support 13 by a screw 16 at one end and has its other end fastened by a screw 18 to a terminal post 17 secured to the base 10.

The bimetallic strip 14 may be fastened so that its broad faces are substantially perpendicular to the base 10 and so that its deflection is substantially parallel to the plane of the base. For switching the starting circuit of the motor, I

provide a movable starting contact 19 on one of the broad faces of the strip 14. The movable contact 19 is held in normal engagement with a fixed starting contact 20 there-adjacent by the spring bias of the undeflected strip 14, in a manner to be explained hereinafter. The fixed contact 20 is carried by an angular support member 21 riveted onto the base 10 by the rivets 22. When the strip 14 is heated, the intermediate portion bows or deflects away from the fixed contact 20, thereby causing the starting contacts 19 and 20 to disengage.

On the opposite face of the strip 14 from that where the starting contact 19 is fastened and secured near the free end of the strip is a movable overload contact 23 held in normal engagement with a fixed overload contact 24. The fixed contact 24 is carried by an angular support member 25 which is secured to the base 10 by the rivets 26. Also on the strip 14 near its free end, disposed adjacent the movable contact 23 but on the other side of the strip, I provide an armature 27 which cooperates with a permanent magnet 28 The armature 27 has two arms, one of which may be secured directly to the strip 14 by suitable means, such as welding, the armature 27 being C-shaped and having the permanent magnet 28 disposed in the open end of the C between the armature arms. The magnet 28 may be fastened to a supporting member 29 by means of a rivet 30. The magnet 28 may be substantially a block shaped piece of magnetizable metal having a central groove 28a on its face adjacent the armature 27 and being so magnetized as to have a north and a south pole on that face.

The bifurcated armature 27 is adapted to be attracted to two positions relative to the magnet 28 which is encompassed by the armature arms. Normally, the armature 27 is magnetically held in a first position in which the overload contacts 23 and 24 are engaged. Upon a predetermined deflection of the strip 14, however, the armature 27 moves to a second attracted position for holding the contacts 23 and 24 in disengagement.

Near the top of the support 29 I provide a projection 31 for limiting the movement of the armature 27 in its second position out of contact with the magnet 28, the fixed overload contact 24 constituting like limiting means for the armature 27 in its first position. It will be obvious that other limiting means for keeping the armature 27 out of contact with the magnet 28, such as shims or spacers of non-magnetic material may be provided, and, therefore, I do not wish to be limited to the construction shown.

Referring now to Fig. 3, I have shown diagrammatically a controller embodying my invention connected in the circuit of a split phase motor M having a starting winding S and a running winding R connected in a well-known manner. The motor M may be supplied from a source of alternating current 32 through the conductors 33 and 34. The running circuit of the motor M comprises the conductor 33 connected in series circuit with the supporting member 25, the overload contacts 23 and 24, the bimetallic strip 14, the heater wire 15, the running winding R, and the conductor 34. The starting circuit of the motor M is electrically connected in parallel to the running circuit from the strip 14 through the starting contacts 19 and 20 and the starting winding S to the conductor 34.

In operation, when the motor M is disconnected from the source 32, the strip 14 remains in an unheated and undeflected condition. The overload contacts 23 and 24 are biased in normal engagement by the magnetic force on the armature 27 and by the leaf spring bias of the strip 14. The starting contacts 19 and 20 are also biased in normal engagement by the leaf spring bias of the strip 14 which seeks to maintain itself in a linear position. The leaf spring biasing effect for holding the several contacts in engagement may be achieved by disposing the fixed contacts 20 and 23 slightly off the line the strip 14 would normally assume in its undeflected condition.

When current is supplied to the motor M, the starting circuit is complete and the motor is ready for gradual acceleration to its running speed. During the acceleration period, a relatively high current flows through the heater wire 15 and the bimetallic strip 14 in the running circuit, since the back E. M. F. of the motor is low at low speeds. The heater wire 15 is heated up by this initial high current and some of its heat is conducted and radiated to the strip 14 thereadjacent. After sufficient time has elapsed for the motor M to come up to speed, the strip 14 bows up or deflects to disengage the starting contacts 19 and 20. This first movement of the strip 14 is one of pivoting on the fixed contact 24, the overload contacts 23 and 24 being magnetically retained in engagement. Thereafter, the motor M will run entirely on its running winding R. The normal running current of the motor M is sufficient to maintain the strip 15 bowed or curvedly disposed at the portion intermediate its ends with the starting contacts 19 and 20 disconnected and the overload contacts 23 and 24 still in engagement.

It will be understood that if the magnet 28 were removed and the left hand end of the bimetallic strip 14 were entirely free, this end would move downward, as viewed in Fig. 1, in response to an increase in the temperature of the strip, and the intermediate portion of the strip would likewise tend to move downward and press the contact 19 more firmly against the contact 20. However, with the magnet 28 holding the left hand end in the position shown in Fig. 1, it will be observed that distortion of the strip in response to an increase in temperature, whereby the strip takes a substantially arcuate form, causes its intermediate portion to move upward and thereby disengage the contact 19 from the contact 20. This action can be clearly understood by first assuming that the strip has its left hand end free and that this end has moved downward upon an increase in temperature. If now this left hand end is forceably moved upward to the position shown in Fig. 1, it will be seen that the strip will be bowed upward at its center because it will retain its arcuate shape to a certain extent.

When the intermediate portion of the strip 14 bows or curves upon heating, the movable contact 23 will tend to slip across the surface of the fixed contact 24 besides acting as pivoting means for the end of the strip 14. To minimize the change in spacing between the armature 27 and the magnet 28 and the magnetic force therebetween when the armature 27 is restrained to its first position, I prefer to make the fixed overload contact 24 a flat surface. This flat surface permits the movable contact 23 to move laterally of the fixed contact 24 as the strip 14 deflects without causing too great a change in the air gap between the armature 27 and magnet 28 such as would occur if both contacts had rounded tips.

Should for any reason a condition of overload come on the motor M, either in the stalled or running condition, the heater 15 and the strip 14 will heat up accordingly. Upon an abnormal heating of the strip 14, it will build up force sufficient to overcome magnetic force on the armature 27 on its first position and will snap the overload contacts 23 and 24 apart. The armature 27 is then magnetically restrained in the second position awaiting automatic resetting when the strip 14 cools down.

With the main circuit broken, the strip 14 will cool down and again cause the starting contacts 19 and 20 to reclose before the magnetic restraint on the strip in the second position is overcome. After the starting contacts 19 and 20 have reclosed, a further cooling and deflection of the strip 14 will cause the overload contacts 23 and 24 to snap engage in the first position, and the motor M will be ready for starting with the starting winding S connected in the motor circuit.

In a motor circuit such as I have shown, it is conceivable that the motor pulling a sluggish mechanical load might stall before the strip 14 cooled sufficiently to reclose the starting contacts 19 and 20. Under these circumstances, if the current were again turned on, the motor would be unable to start since the starting circuit S would be still disconnected. However, the high current through the heater element 15 and the strip 14 would quickly cause the strip 14 to deflect sufficiently to actuate the overload contacts 23 and 24, and automatic resetting of both the starting and the overload contacts would occur in the normal and correct sequence before any damage was done to the motor.

Although I have shown my invention in one form with magnetic restraining and resetting means, I do not intend to be limited thereto, since it will be obvious to those skilled in the art that spring means, such as an overcenter spring arrangement, or other means may be used as well without departing from the spirit of my invention.

While I have shown a particular embodiment of my invention, it will be understood, of course, that I do not wish to be limited thereto since many modifications may be made, and I therefore contemplate by the appended claims to cover any such modifications as fall within the true spirit and scope of my invention.

What I claim as new and desire to secure by Letters Patent of the United States is:

1. A motor controller comprising a starting switch and an overload switch, means including a thermo-responsive element arranged for lateral deflection in response to a change in temperature for actuating said starting switch and said overload switch, means for heating said thermo-responsive element, and means associated with said thermo-responsive element for causing said overload switch to be operated only in a predetermined sequence with respect to the operation of said starting switch.

2. A thermo-responsive device comprising a thermo-responsive element arranged for a deflection in response to changes in temperature, means for heating said thermo-responsive element, switching means operable by a deflection of an intermediate portion of said element, switching means operable by another portion of said element, and restraining means for retaining said last mentioned switching means in a given position during a predetermined deflection of said element while said first mentioned switching means is operated.

3. A thermo-responsive device comprising a thermo-responsive element fixed at one end having the other end free for lateral deflection, means for heating said thermo-responsive element, switching means including a first pair of contacts in normal engagement operable by the deflection of said free end of said thermo-responsive element, switching means including a second pair of contacts in normal engagement operable by the deflection of an intermediate portion of said thermo-responsive element, and restraining means for retaining said first pair of contacts in engagement during a predetermined deflection of said element while said second pair of contacts are caused to disengage, said first pair of contacts being disengaged by a further deflection of said element, and said restraining means retaining said first pair of contacts in disengagement thereafter until said second pair of contacts are caused to re-engage.

4. A motor controller comprising a starting switch and an automatic resetting overload switch, said starting switch and said overload switch being normally closed for completing a circuit, means including a bimetallic strip adapted to deflect in response to changes in temperature for actuating said starting switch and said overload switch, means including a heater element for heating said strip, electrical connections for connecting said heater element in the circuit of a motor to be controlled, and means associated with said strip for retaining said overload switch in said normally closed position after said starting switch has opened, for snapping said overload switch to an open position after a predetermined deflection of said bimetallic strip, and for causing said overload switch to reset in a predetermined sequence relative to the closure of said starting switch after said strip has cooled.

5. A motor controller comprising a starting switch and an overload switch having a plurality of fixed and movable starting and overload contacts in respective normal engagement, means including a bimetallic strip for actuating said movable contacts, means for heating said bimetallic strip for causing said strip to deflect, electrical connections for connecting said heating means in the circuit of a motor to be controlled, and means associated with said strip including a permanent magnet and an armature for causing said overload contacts to disengage and re-engage in a predetermined sequence with respect to the operation of said starting contacts.

6. A motor controller comprising fixed and relatively movable starting contacts in normal engagement, fixed and relatively movable overload contacts in normal engagement, means for actuating said movable starting and overload contacts including a bimetallic strip, means including a heater element for causing said strip to deflect, and magnetic means cooperating with said strip adapted to be attracted to either of two positions for retaining said overload contacts in engagement in a first of said positions when said starting contacts are caused to disengage by a deflection of said strip and for snapping said armature to said second position after a predetermined deflection of said bimetallic strip for causing said overload contacts to disengage.

7. A motor controller comprising fixed and relatively movable starting contacts in normal engagement, fixed and relatively movable overload

contacts in normal engagement, means for actuating said movable starting and overload contacts including a bimetallic strip, means including a heater element for causing said strip to deflect, electrical connections for connecting said heater element in the circuit of a motor to be controlled, and magnetic means cooperating with said strip adapted to be attracted to either of two positions for retaining said overload contacts in engagement in a first of said positions when said starting contacts are caused to disengage by a deflection of said strip and for snapping said armature to said second position after a predetermined deflection of said bimetallic strip for causing said overload contacts to disengage, said last mentioned means being adapted to restrain said armature in said second position for holding said overload contacts in disengagement until said bimetallic strip has cooled sufficiently to permit said starting contacts to re-engage.

8. A motor controller comprising fixed and movable starting and overload contacts, means including a bimetallic strip fixed at one end the other end being adapted to deflect in response to changes in temperature for actuating said contacts, one of said movable starting contacts being in normal engagement with one of said fixed starting contacts and operable by the deflection of an intermediate portion of said strip, and means including a permanent magnet cooperating with an armature on said other end of said bimetallic strip for retaining said overload contacts in normal engagement during a predetermined deflection of said intermediate portion of said strip, said predetermined deflection of said strip being sufficient to disengage said starting contacts.

9. A motor controller comprising fixed and movable starting and overload contacts, means including a bimetallic strip fixed at one end the other end being adapted to deflect in response to changes in temperature for actuating said contacts, said movable starting contact being in normal engagement with said fixed starting contact and operable to disengage by the deflection of an intermediate portion of said strip, said movable overload contact being in normal engagement with said fixed overload contact and operable to disengage by said other end of said strip, and means including a permanent magnet cooperating with an armature secured to said strip for retaining said overload contacts in engagement during a predetermined deflection of said intermediate portion of said strip, for snap disengaging said overload contacts after said predetermined deflection of said strip, and for retaining said overload contacts in disengagement until said starting contacts have re-engaged after said strip has cooled, said last mentioned means thereafter causing said overload contacts to snap re-engage.

10. A motor controller comprising a bimetallic strip fixed at one end the other end being arranged for lateral deflection in response to changes in temperature, a movable starting contact secured to an intermediate portion of said strip for movement therewith normally in engagement with a fixed starting contact, a movable overload contact secured to said other end of said strip for movement therewith normally in engagement with a fixed overload contact, a heater element for heating said strip, and means including an armature secured to said strip having two arms spaced apart and a permanent magnet positioned between said arms, said armature adapted to be attracted to a first position for holding said overload contacts normally in engagement while said starting contacts are caused to disengage and adapted to be attracted to a second position after a predetermined deflection of said strip for disengaging said overload contacts, whereby said overload contacts are held in disengagement until said strip has cooled sufficiently for re-engaging said starting contacts and thereafter said overload contacts are caused to re-engage.

11. A thermo-responsive device comprising a bimetallic strip fixed at one end having a movable starting contact secured to an intermediate portion of said strip and a movable overload contact secured to the free end of said strip, a pair of stationary contacts in respective normal engagement with said movable contacts in a first position when said strip is in an undeflected position, a heater element for heating said strip, said strip normally seeking to deflect laterally in a positive direction throughout its length upon being heated, and magnetic means for restraining said free end of said strip in said first position for holding said overload contacts in engagement during a predetermined deflection of said strip and thereby causing said intermediate portion of said strip to deflect in a negative direction for disengaging said starting contacts.

12. A thermo-responsive device comprising a bimetallic strip fixed at one end having a movable starting contact secured to an intermediate portion of said strip and a movable overload contact secured to the free end of said strip, a pair of stationary contacts in respective normal engagement with said movable contacts in a first position when said strip is in an undeflected position, a heater element for heating said strip, said strip normally seeking to deflect laterally in a positive direction throughout its length upon being heated, and magnetic means for restraining said free end of said strip in said first position for holding said overload contacts in engagement during a predetermined deflection of said strip and thereby causing said intermediate portion of said strip to deflect in a negative direction for disengaging said starting contacts, said magnetic means being adapted to snap said free end of said strip to a second position in a positive direction for disengaging said overload contacts upon a further deflection of said strip while said intermediate portion of said strip is caused to retain its negative deflection for holding said starting contacts in disengagement.

EDGAR H. AYERS.