Oct. 8, 1940. E. F. GAINES ET AL 2,217,543

WINDOW

Filed Jan. 6. 1939 4 Sheets-Sheet 1

Fig. 1.

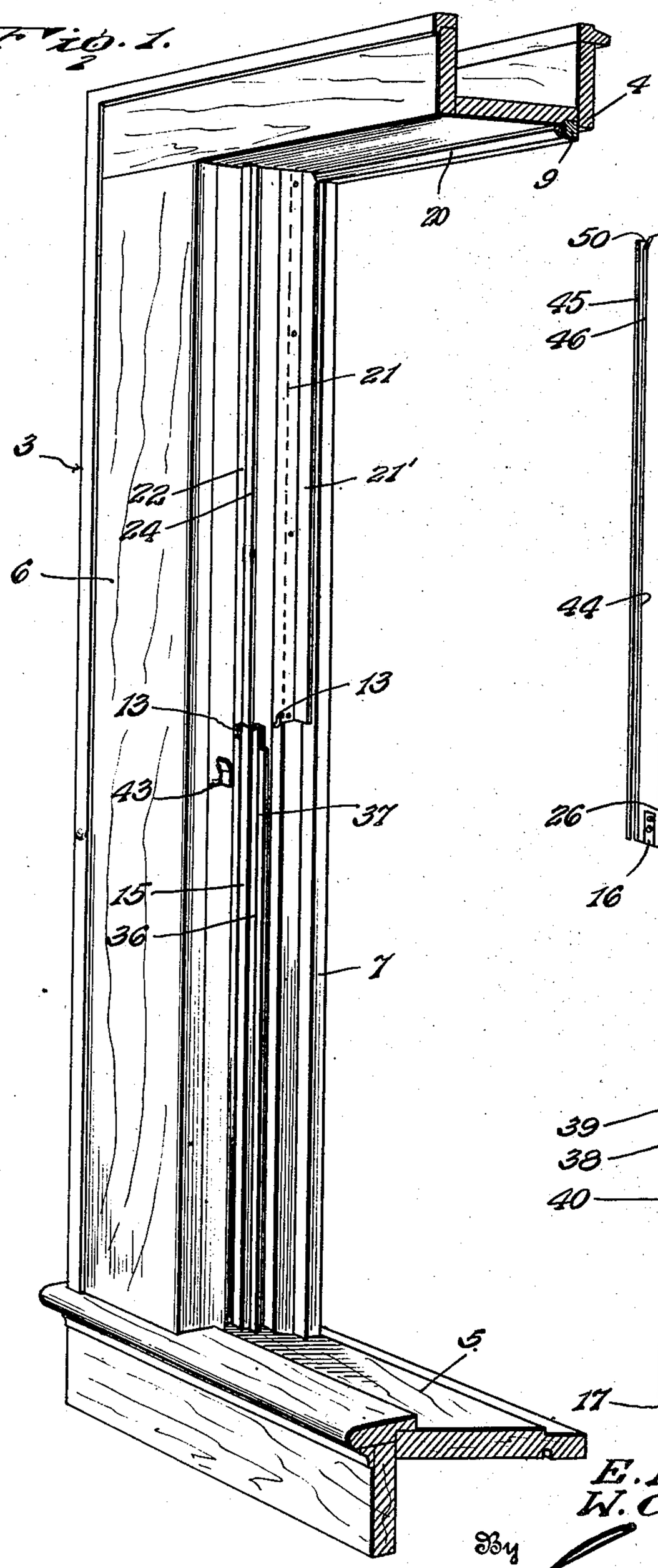

Fig. 2.

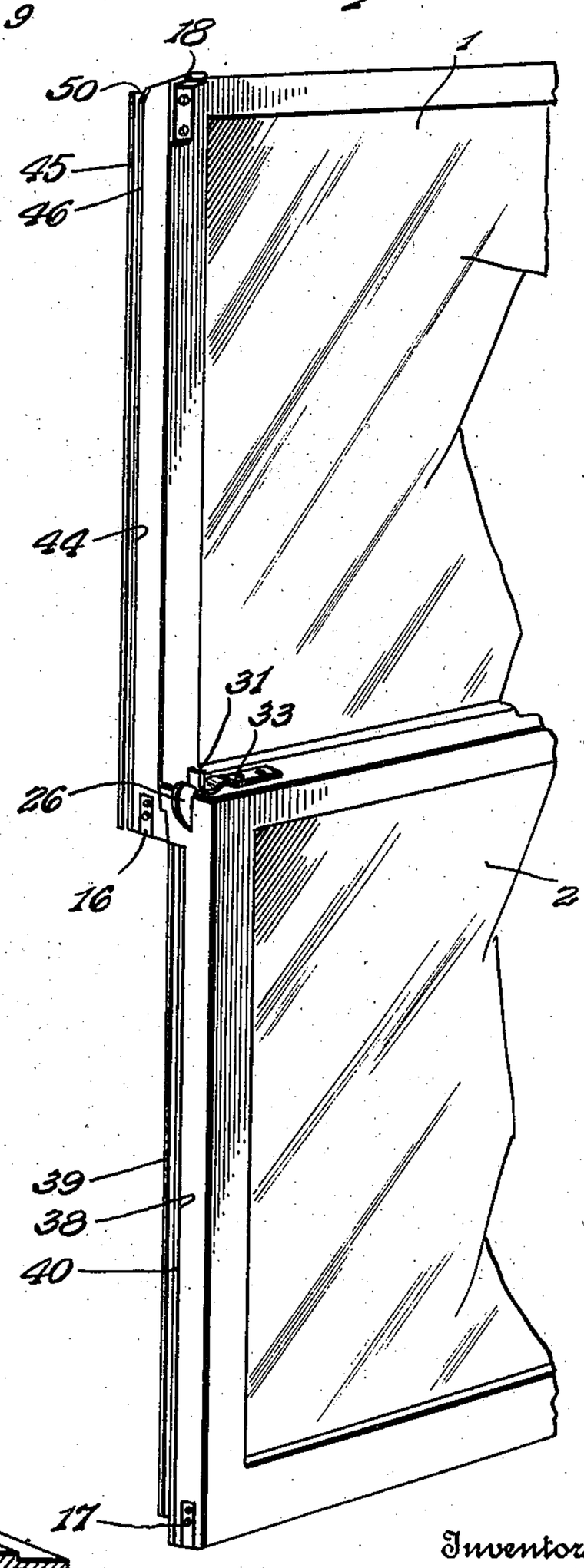

Inventors

E. F. Gaines.
W. C. Lippert.

By Lacey & Lacey.

Attorneys

Oct. 8, 1940. E. F. GAINES ET AL 2,217,543

WINDOW

Filed Jan. 6. 1939 4 Sheets-Sheet 2

Fig. 3.

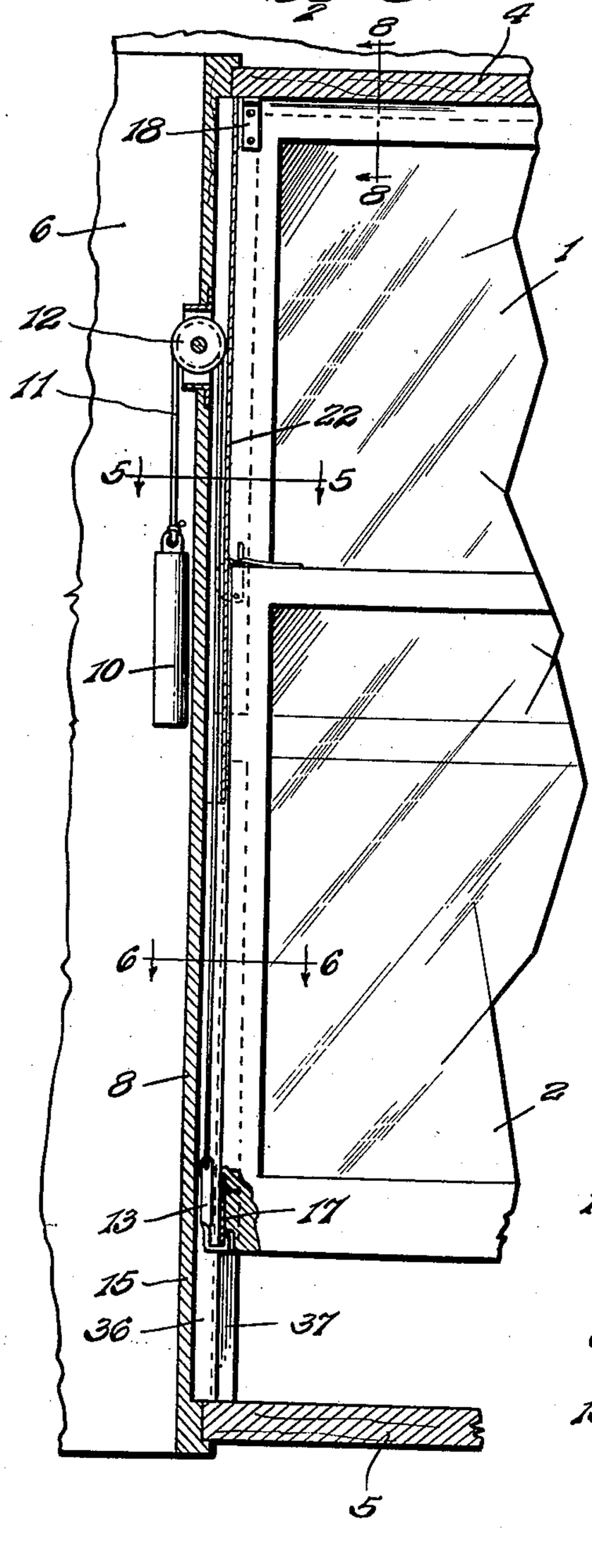

Fig. 4.

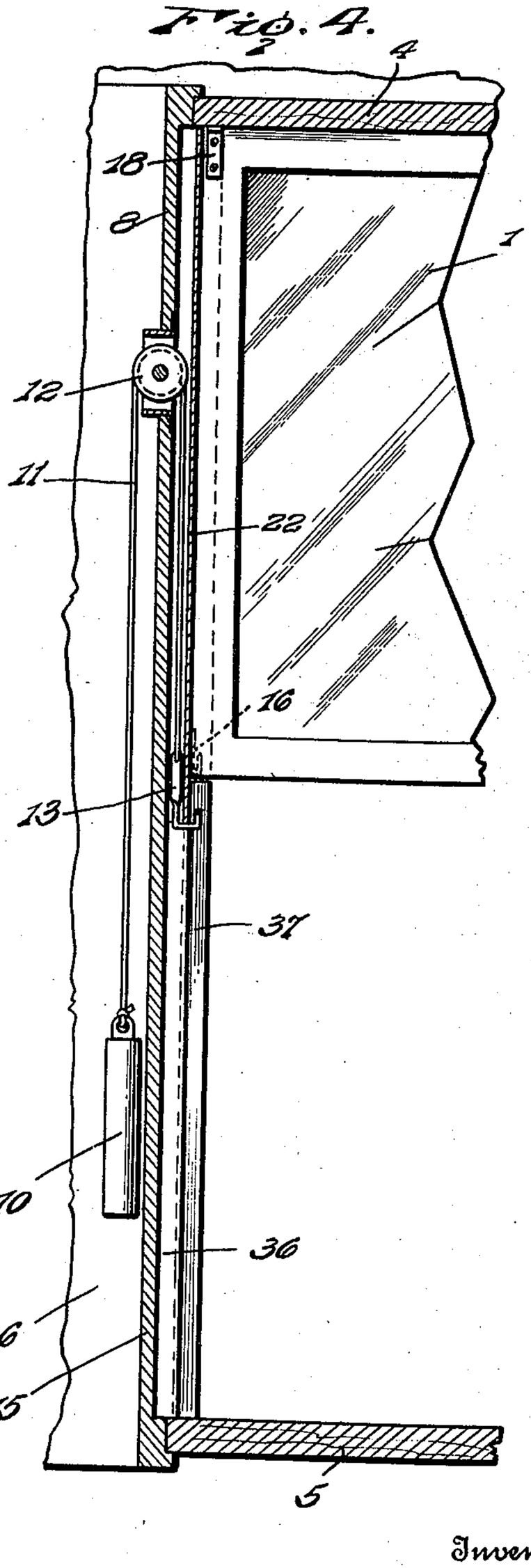

Inventors

E. F. Gaines.
W. C. Lippert.

By Lacey & Lacey. Attorneys

Oct. 8, 1940. E. F. GAINES ET AL 2,217,543

WINDOW

Filed Jan. 6. 1939 4 Sheets-Sheet 3

Fig. 5.

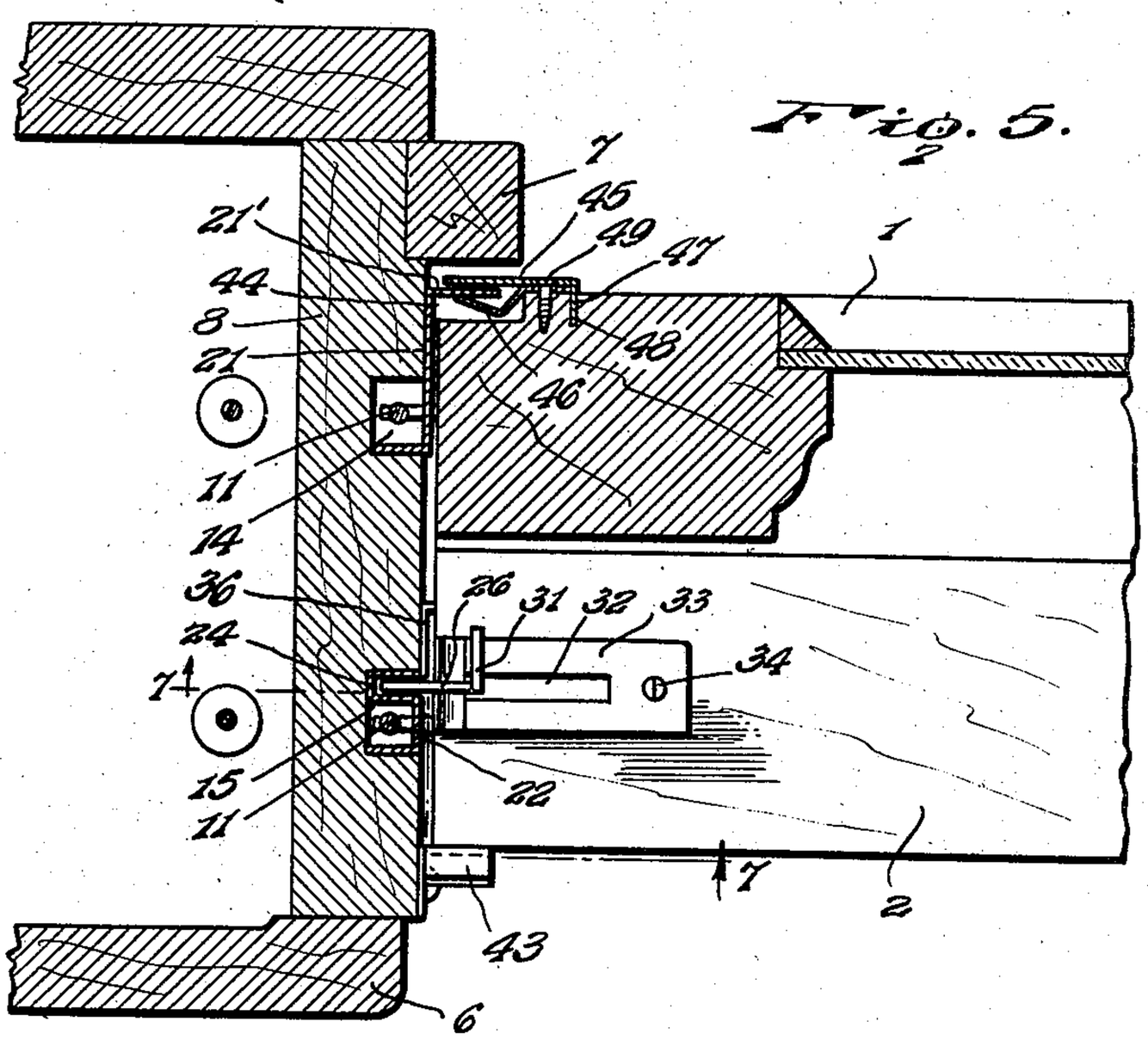

Fig. 6.

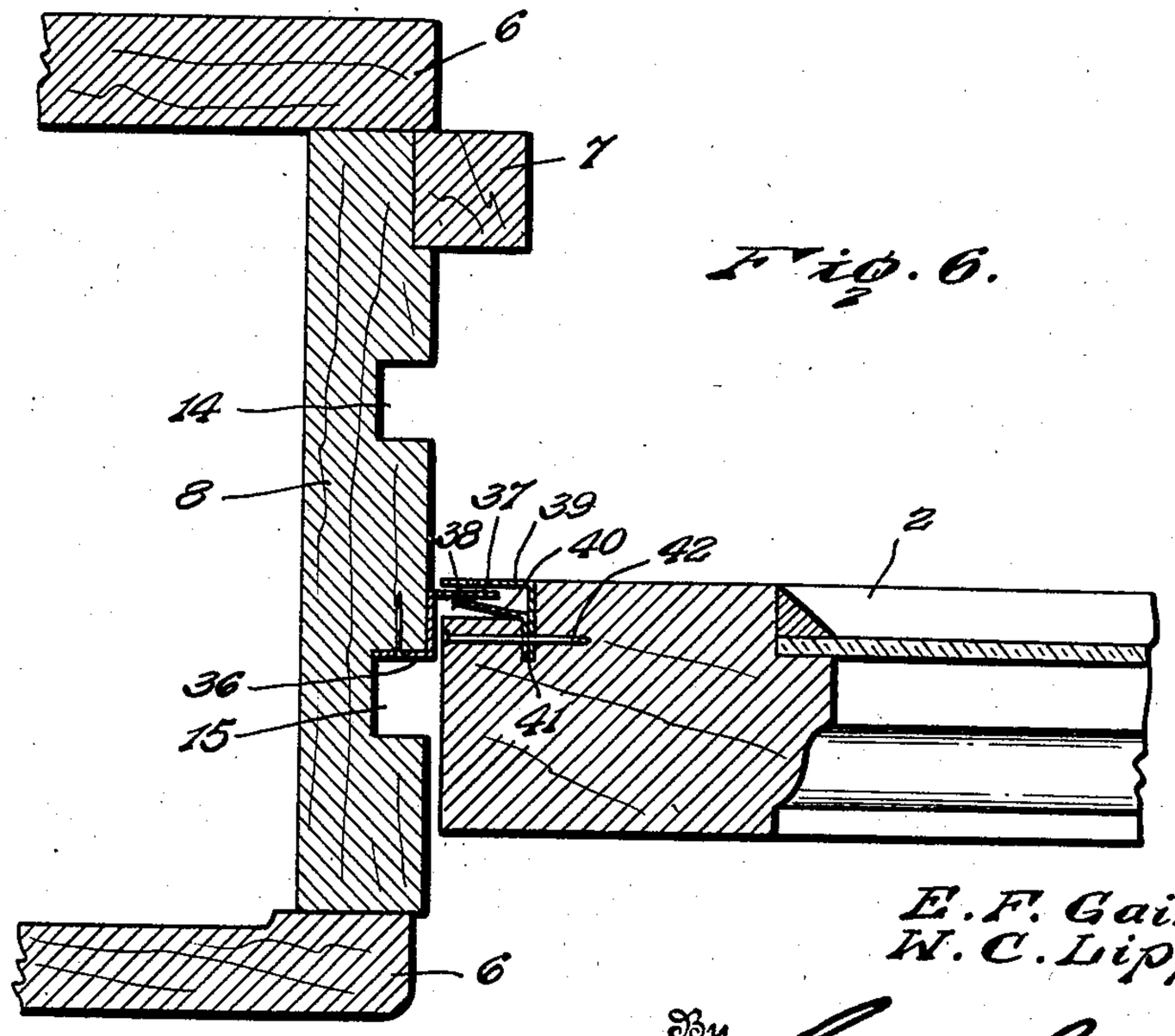

Inventors
E. F. Gaines.
W. C. Lippert.

By Lacey & Lacey, Attorneys.

Oct. 8, 1940. E. F. GAINES ET AL 2,217,543

WINDOW

Filed Jan. 6. 1939 4 Sheets-Sheet 4

Fig. 7.

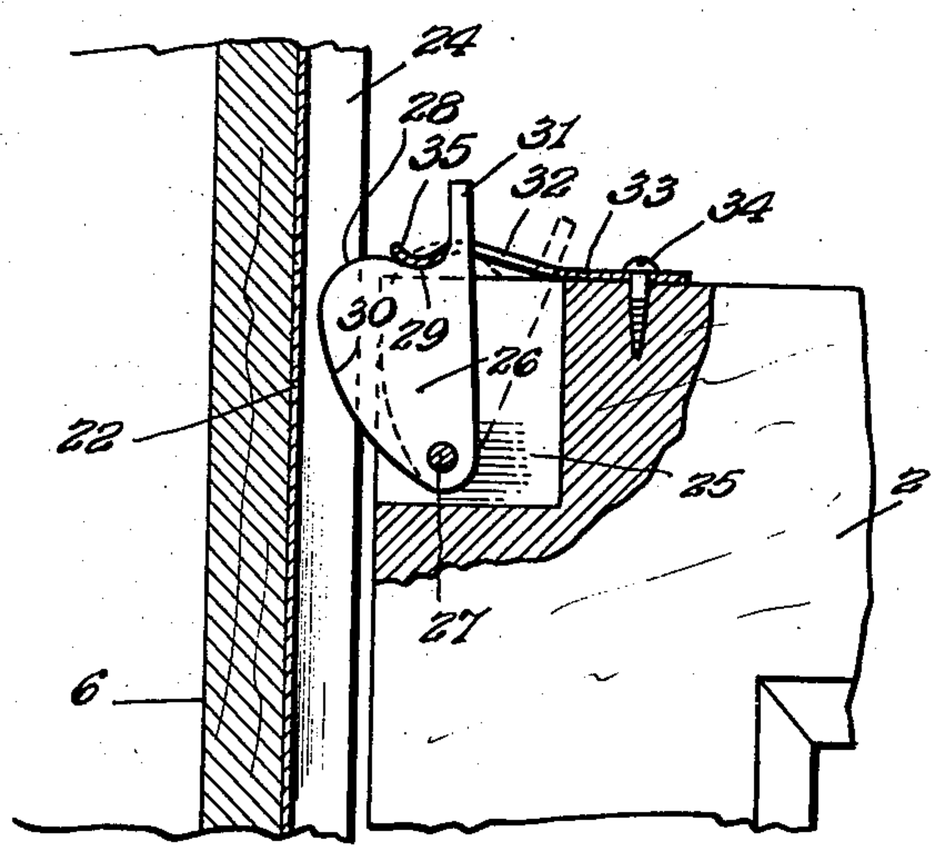

Fig. 8.

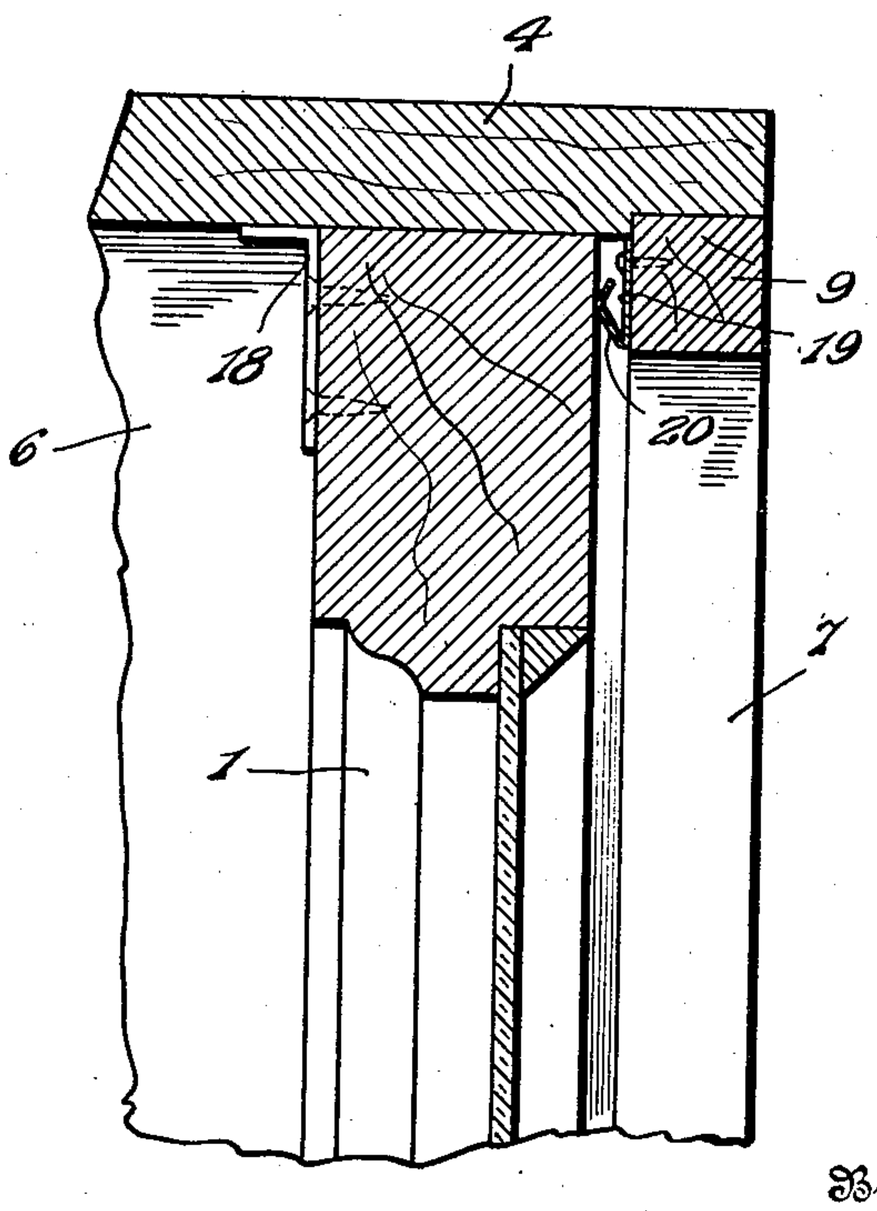

Fig. 9.

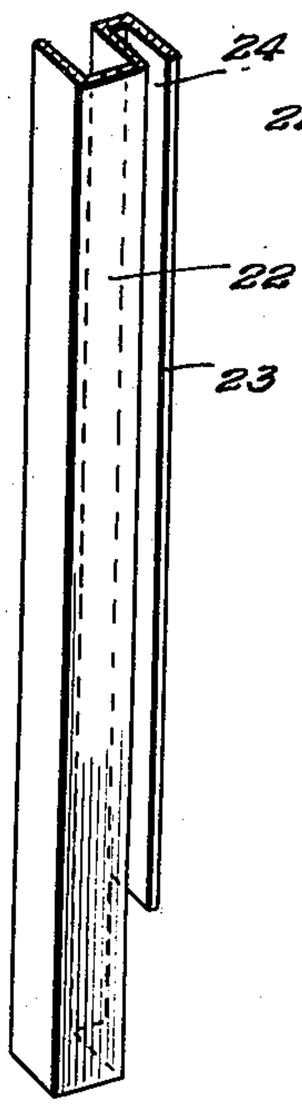

Fig. 10.

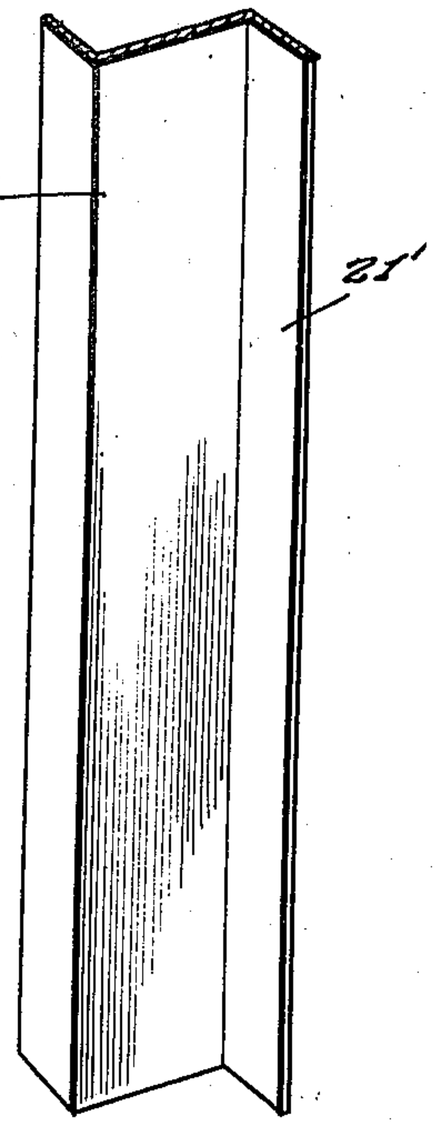

Fig. 11.

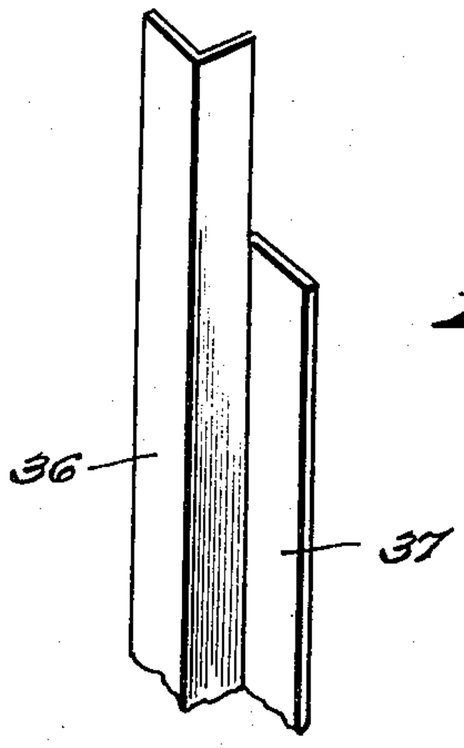

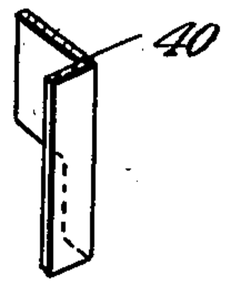

Fig. 12.

Inventors

E. F. Gaines.
W. C. Lippert.

By Lacey & Lacey Attorneys

Patented Oct. 8, 1940 2,217,543

UNITED STATES PATENT OFFICE

2,217,543

WINDOW

Earl F. Gaines and Walter C. Lippert, Milwaukee, Wis.

Application January 6, 1939, Serial No. 249,638

3 Claims. (Cl. 20—43)

This invention relates to a window construction and more particularly to a window including a frame having upper and lower sashes mounted therein and slidable vertically into and out of closed position.

One object of the invention is to provide the frame with improved means for slidably mounting the upper and lower sashes and the sashes with companion elements which slidably engage the guides carried by the window frame and not only cause the sashes to be slidably mounted but in addition serve as weather stripping to prevent air from flowing through crevices between the sashes and the window frame.

Another object of the invention is to so form and mount the sash guiding means carried by the window frame that they will serve not only as guides for the sashes but also as shields for concealing counter-balance connections.

Another object of the invention is to provide the counter-balance connections with sash engaging members which are adapted to be engaged with the strips constituting the sash guide and released from the sashes when the sashes are shifted upwardly to the top of the window frame. It will thus be seen that, when the window sashes are raised, they may be automatically released from the counter-balance connections and withdrawn from the window frame through the upper portion thereof.

Another object of the invention is to provide the lower sash with keepers which are movable from an extended position in engagement with the guides of the frame to a retracted position permitting removal of the lower sash from the frame when the lower sash is in its raised position.

Another object of the invention is to provide means for limiting sliding movement of the two sashes in the frame relative to each other.

The invention is illustrated in the accompanying drawings, wherein:

Figure 1 is a perspective view of approximately one-half of a window frame having the improved construction,

Figure 2 is a perspective view of approximately one-half of the upper and lower sashes which are slidably received in the frame of Figure 1,

Figure 3 is a view showing the frame in vertical section and the sashes in elevation and illustrating the manner in which the lower sash is connected with its weight cord,

Figure 4 is a view similar to Figure 3 with the lower sash removed and the hook of the sash cord engaged with the lower end of the strip constituting the sash guide and the sash cord concealing means,

Figure 5 is a transverse sectional view upon an enlarged scale taken along the line 5—5 of Figure 3,

Figure 6 is a similar view taken along the line 6—6 of Figure 3,

Figure 7 is a fragmentary view taken along the line 7—7 of Figure 5 and showing one of the keepers which slidably hold the lower sash in the frame,

Figure 8 is a fragmentary sectional view taken along the line 8—8 of Figure 3 and showing the weather stripping at the top of the frame for forming an air-tight joint across the upper end of the upper sash,

Figure 9 is a perspective view of the metal strip which guides movement of the lower sash and conceals the sash cord thereof,

Figure 10 is a perspective view of the corresponding strip for the upper sash,

Figure 11 is a perspective view of the weather stripping carried by the frame for the lower sash, and

Figure 12 is a fragmentary perspective view of the lower end portion of the weather stripping carried by the lower sash for cooperating with the companion weather stripping carried by the window frame.

The improved window has upper and lower sashes 1 and 2 which are mounted in a frame 3 having an upper head portion 4, a lower sill 5 and a weight box 6 extending vertically at each side between the sill and the head portion. The usual outer strip or blind strip 7 extends vertically along the wall 8 of each weight box, and there has also been provided the usual cross strip 9 secured against the under face of the head portion 4 between upper ends of the strip 7.

In order to counter-balance the upper and lower sashes and permit them to be slid easily in the frame and remain in an adjusted position, there have been provided the usual weights 10 to which the sash cords 11 are tied. The sash cords are engaged about the usual guide pulleys 12 and at their outer ends carry hooks 13 which project out of the grooves 14 and 15 in which the sash cords move with their hooked lower ends disposed in position to engage the plates 16 and 17 secured against side edge faces of the two sashes 1 and 2 at lower ends thereof. The grooves or channels 14 and 15 extend the full height of the window frame, and the hooks 13 slide freely in these grooves from a lowered position close to the bottom of the frame to a raised position sub-

stantially midway the height of the frame. Therefore, the two sashes may be slid vertically from a raised position to a lowered position and opened and closed in the usual manner. To each upper corner portion of the upper sash is secured a cleat 18, and since the cleats project inwardly from the upper sash, as shown in Figures 2 and 8, they will serve to engage the upper end of the lower sash and thus prevent the sashes from being slid in opposite directions beyond the position in which they have their upper and lower ends substantially flush with each other. Metal weather stripping 19 is secured against the inner side face of the cross strip 9, and when the upper sash is in its raised or closed position, it engages the yieldable lip 20 of this weather stripping to form an air-tight joint across the upper end of the upper sash.

In order to conceal the outer portions of the sash cords, there have been provided weather strip guards 21 and 22 which are formed of sheet metal bent as shown clearly in Figure 5 and in Figures 9 and 10. The guard 22 has a main portion which is substantially U-shaped in cross section and along its outer side carries a lip 23 defining a channel 24. This guard 22 fits snugly within the upper half of the groove 15 with its outer surface flush with the surface of the wall 8, and when the lower sash is in its lowered or closed position, the sash cords for the lower sash will be entirely concealed from view. The channels 24 of the two guards 22 are intended to receive the guides or keepers carried by the lower sash at upper corners thereof. Each of the upper corner portions of the lower sash is cut to form a pocket 25 in which a guide or keeper 26 is pivotally mounted through the medium of a pin 27 extending through its lower end. Each keeper or guide is of substantially triangular outline with its apex disposed downwardly and the upper edge of the keeper is cut to provide a cam surface 28 leading from a recess or seat 29 and merging into the outer side edge 30 of the keeper. A finger 31 extends upwardly at the inner side of the keeper and passes through a slot 32 formed in a resilient strip 33 extending transversely of the sash and secured upon the upper edge faces thereof by a screw 34. The upper end portion of this finger is bent laterally, as shown in Figure 5, so that the finger may be easily grasped and the keeper swung about its pivot 27 to the extended position in which it engages in the groove or track 24 or to the retracted position within the pocket, as indicated by the dotted lines in Figure 7. When the two keepers are extended, they are held in this extended position by the free end portion 35 of the spring strip which engages in the seat 29 and the lower sash will be held in its proper position for sliding movement from a lowered or closed position to a raised position. In view of the fact that the end portion 35 is curved longitudinally of the spring strip 33 as shown in Figure 7, a cam action may be exerted by the curved portion 28 of the keeper and the keeper easily shifted to its retracted position. When the keepers are in the retracted position, the lower sash may be shifted inwardly after being raised and bodily removed from the window frame.

A window guide 36 which is formed of sheet metal is provided and is secured against the wall 8 of the weight box along one side of the lower half of the groove 15. The window guide has an outstanding flange or lip 37 which terminates in spaced relation to the upper end of said window guide, as shown in Figures 1 and 11, and this flange or lip extends into a groove 38 formed along the adjacent side of the lower sash at the outer face thereof. A metal closure strip 39 for the outer side of the recess 38 and a sealing strip or companion weather strip 40 are mounted in the recess 38 with their inner portions secured in a groove 41 by a suitable number of nails 42, and when the lower sash is in place, the flange 37 of the guide 36 engages between the closure 39 and the weather stripping 40, as shown in Figure 6. Therefore, an air-tight joint will be provided at each side of the lower sash for the full height thereof when this sash is closed and air will be prevented from flowing through crevices between the window frame and sides of the lower sash. In view of the fact that the flange 37 terminates in spaced relation to the upper end of the guide 36, this flange will be disposed below the lower edge of the lower sash when this lower sash is fully raised and the lower sash may be shifted inwardly out of the window frame. It should also be noted that, while the hook 13 of the sash cord will normally remain in engagement with the retainer plate 17 of the lower sash, the upper end portion of the lower sash may be tilted inwardly as it is raised and thus shifted upwardly to such a height that the hook of the sash cord will engage the lower end of the weather strip guard 22 and automatically release the window sash from the sash cord. This takes place at both sides of the window sash and the lower sash may then be bodily removed from the window frame with the hooks of its two sash cords remaining in engagement with lower ends of the two closure strips and their hooked ends projecting outwardly in position to again engage the plate 17 when the lower sash is replaced and slid downwardly. A guide 43 is secured against the wall 8 of the weight box at each side of the window frame to guide movement of the lower sash as it is inserted or removed.

The weather strip guard 21 for the outer grooves 14 are each provided with a flange or lip 21′ along its outer side edge and thus provide each guard 21 with a flange or lip also serving as a weather strip. The weather strip 21′ extends into a recess 44 formed in the outer face of the adjacent side portion of the upper sash and corresponding to the groove or recess 38 of the lower sash. An outer closure strip 45 is provided for each recess 44 and within each recess is disposed a metal weather strip 46 corresponding to the weather strip 40, and upon referring to Figure 5, it will be seen that the guide strip 21′ fits between the closure strip 45 and the weather strip 46 with said strip 21′ and the weather strip 46 in close contacting engagement with each other to provide a tight joint when the upper sash is in its raised or closed position and thus prevent air from flowing through crevices between side edges of the upper sash and side portions of the window frame. A flange 47 formed along the closure strip 45 engages in a groove 48 formed in the outer face of the upper sash and when a suitable number of screws 49 are passed through the strips 45 and 46 and into the sash the two strips will be firmly held in place and prevented from shifting out of their proper position. The upper end of each weather strip 46 is bent away from the companion closure strip 45, as shown at 50 in Figure 2, thus providing means for guiding the lower end of the weather strip 44 into place between the strips 45 and 46.

When the upper sash is removed, it is shifted downwardly after moving the cleat 13 to such a position that lower ends of the weather strips 21' move from between the strips 45 and 46. The upper sash may then be tilted inwardly at its upper end and shifted upwardly to a position in which the hook 13 of its sash cord will engage lower ends of the guard 21 and automatically free the hook from the plate 16. Therefore, the sash cords of the upper sash will be released therefrom and the upper sash may be shifted inwardly for bodily removal from the window frame. When the upper sash is replaced and the cleat 13 again applied, it may be shifted downwardly to a lowered or opened position but it cannot be shifted downwardly a sufficient distance to effect movement of the strip 21' from between the companion strips 45 and 46 as the cleat will engage the upper end of the lower sash and limit downward movement of the upper sash. It will thus be seen that the strips 21' will serve as guides for the upper sash as well as constituting weather stripping.

Having thus described the invention, what is claimed as new is:

1. In a window construction, a sash having vertically extending grooves at its opposite sides, a sash shiftable vertically in said frame, counterbalances for said sash having portions extending longitudinally in said grooves, closure strips for upper portions of said grooves, the closure strips being formed with vertically extending channels, and retainers carried by said sash and movable from an extended position within the channels to a retracted position for freeing the said sash and permitting removal thereof from the frame.

2. In a window construction, a frame having side portions formed with vertically extended grooves, a sash slidable vertically in said frame, counter-balancing means for said sash having members extending longitudinally in said grooves and adapted to be connected with adjacent side portions of said sash, and closure strips for upper portions of said grooves formed with longitudinally extending channels, keepers carried by said sash and movable from a retracted position to an extended position for engagement in said channels to guide vertical shifting of said sash, and means for yieldably resisting movement of the keepers in adjusted position.

3. In a window construction, a frame, upper and lower sashes slidable in said frame, strips extending longitudinally in said frame against opposite side portions thereof and each having a portion bent to form a longitudinally extending channel, upper corner portions of the lower sash being formed with pockets, keepers pivotally mounted in said pockets and each being movable from a retracted position in the pocket to an extended position for engaging in the channel of the companion strip, spring strips secured upon the upper edge face of the lower sash and extending across upper ends of the pockets with their free ends curved longitudinally and bearing upon upper edges of the keepers for yieldably resisting movement of the keepers to adjusted position, and fingers extending upwardly from the keepers through slots formed longitudinally in said resilient strips and constituting handholds adapted to be grasped when moving the keepers to adjusted position.

EARL F. GAINES.
WALTER C. LIPPERT.