June 11, 1940. H. KOPPERS 2,204,019

COAL CHARGING HOPPER FOR COKE OVENS

Filed Nov. 19, 1937

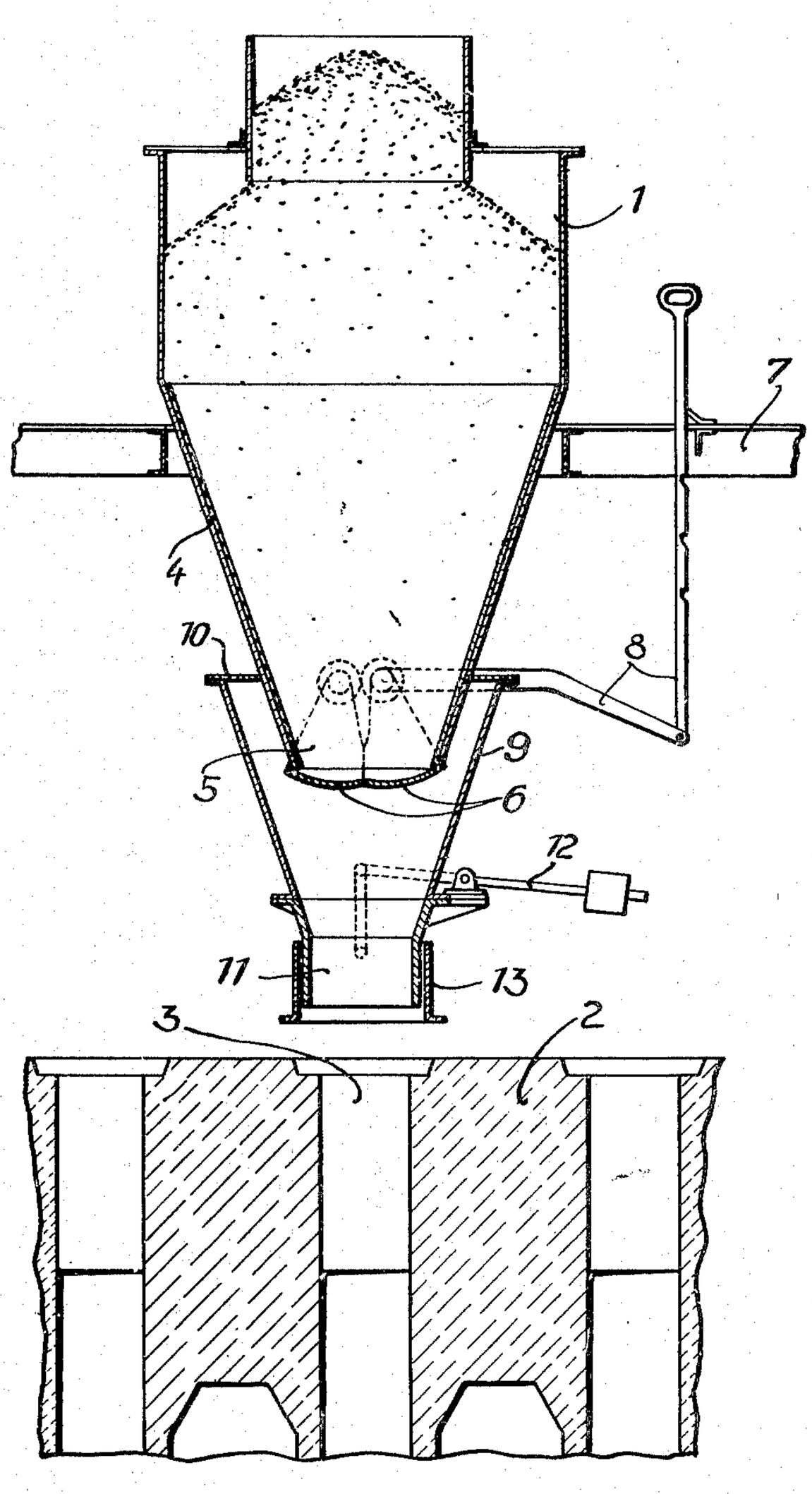

Inventor:
Heinrich Koppers
By Henry Lowe Clarke
his Attys

Patented June 11, 1940

2,204,019

UNITED STATES PATENT OFFICE

2,204,019

COAL CHARGING HOPPER FOR COKE OVENS

Heinrich Koppers, Essen, Germany, assignor, by mesne assignments, to Koppers Company, Pittsburgh, Pa., a corporation of Delaware

Application November 19, 1937, Serial No. 175,380
In Germany November 20, 1936

2 Claims. (Cl. 214—35)

The present invention relates to hoppers for charging coal or other suitable fuel or mixtures of fuels into coke ovens, for instance into horizontal chamber or retort ovens for the production of coke and gas, and more particularly to those hoppers which are mounted on a suitable lorry running over the top of the coke oven battery and which are provided with two or more outlets at the bottom, in order that the coal may be fed into the oven through the usual charging openings provided therefor in the oven roof.

It is a well-known fact that the diameter of the charging openings in the oven roof is dependent on the width of the oven chamber. The diameter of the charging holes and also that of the outlet openings in the bunker of the coal charging lorry is therefore generally very small. It is extremely difficult to discharge moist or sticky coal at a higher velocity through the narrow bottom openings of the charging hopper and to fill it into the oven. In most cases, it is therefore necessary to do hand-poking work. For eliminating any poking work, it has already been suggested to equip the charging hoppers with mechanical stirring and scraping devices by means of which the coal adhering to the bunker will be removed, so as to obtain a uniform and rapid discharge.

The main object of the present invention is to provide such improvements in hoppers of coal charging lorries or the like, which will enable a proper and quick discharge of the charging hoppers in a very simple manner, without having to use such expensive and complicated stirring and scraping devices.

The invention now consists in that the lower bunker spout which is above the bottom outlet openings for the bunker, and from where the bunker enlarges towards the top, is provided with a larger diameter than the bottom bunker's outlet opening the diameter of which is essentially similar to that of the charging holes.

In order to ensure a quick discharge of the coal from the inner walls of the charging hoppers or bunkers and further to avoid any corrosion favoured by the sticking of the coal to the walls, the sliding surfaces of the charging hoppers are lined with sheet plates, made of zinc, aluminium or a similar, non-corroding material. The sliding surface must be smooth.

According to the present invention, the charging hopper or bunker is to be constructed in such a way that a proper discharge is obtained at a higher velocity without any coal sticking to the walls.

Further objects and features of my invention may be taken from the following description of a preferred embodiment thereof shown in the accompanying drawing, in which the single figure illustrates a vertical section through one of the charging hoppers, built according to my invention.

The charging device comprises a series of charging hoppers 1, arranged side by side. For simplicity, only one of the hoppers is illustrated on the drawing. The charging device travels on the oven roof 2. The driving means have, however, not been shown on the drawing. Several charging holes 3 are arranged in the oven roof 2. The hopper 1 is provided with upper inclined surfaces 4, extending downwards to a lower spout 5, which is situated at a distance greater than usually from the oven roof 2. It will be noted from the drawing that the upper outlet 5 measures ¾ of an inch or 12/16" as compared with 9/16" for the lower outlet 11, and the upper outlet 5 is at a distance (15/16") substantially exceeding its (12/16") diametric dimension from the top of the lower outlet 11. Thus it will be apparent that the valve outlet 5, which has a free-section larger than the connecting nozzle 11, terminates above the top of the connecting nozzle 11 at a distance substantially greater than its own diametric dimension. The lower spout 5, which is closed by means of segmental valves 6, is of such a large area, that the coal can be discharged when the valves are open, without causing any blocking. The segmental valves 6 are operated from the service platform 7 by means of lever and rod 8. The bottom opening for the hopper or bunker is constituted of a lower hopper or bin 9 in which the lower spout 5 enters. The discharging bin 9 is fixed to the hopper 1 by means of a ring plate 10 which is above the lower spout 5 and is of larger diameter. At its bottom, the discharging bin 9 has a branch or nozzle with a sectional area similar to that of the charging opening 3, so that the coal leaving the lower spout 5, can be fed into the oven charging holes 3. The increase in diameter of the outlet 5 over the outlet 11 together with the substantially greater distance between the two, together with the spacing of hopper 9 with a substantial clearance from hopper 4, form in effect an expansion chamber. These features in cooperation with each other in conjoint use are effective to cause, especially in conjunction with the smooth action of the inner lining, coal to flow when moist or sticky, through the valved-closed outlet 5 and lower hopper outlet 11 to the charging hole 3 without sticking,

free from poking and scraping and without resort to obstructions in the interiors of the hoppers.

The branch or nozzle 11 is surrounded by a movable mouth piece 13, which can be lowered down to the oven roof by means of lever and rod 12 before charging the oven with coal.

The inner, inclined surfaces 4 of the charging hopper 1 are lined with sheet plates made of zinc, aluminium or another non-corroding material, in order to obtain a proper and quick discharge of the coal. The inner surfaces of the charging hopper 9 which come into contact with the coal, may also be covered with sheet-plates in a similar way.

I claim:

1. A coke-oven lorry coal-charging receptacle comprising: an upper hopper of comparatively large area at its upper part with lower inclined sides tapering to and terminating in an unrestricted lower valve-closed outlet; and a lower hopper with similarly inclined tapered sides surrounding the lower discharge valve-closed outlet of the upper hopper with a substantial clearance and terminating in a bottom connecting nozzle outlet to a coke-oven charging hole for connecting the lorry upper hopper with the charging hole; and in which the inclined sliding faces of the tapered sides of the upper hopper are innerlined with non-corroding sheet plates; and in which the valve-closed outlet has a free-section larger than the connecting nozzle outlet, and terminates above the top of the connecting nozzle at a distance substantially greater than its own diametric dimension as to cause, in conjunction with the smooth-action of the inner-lining, the coal material to flow when moist or sticky, through the valve-closed outlet and lower hopper to the charging hole without sticking, free from poking and scraping in the hoppers, the interior of the hoppers and outlets being entirely free from obstructions.

2. A coke-oven lorry coal-charging receptacle comprising: an upper hopper of comparatively large area at its upper part with lower inclined sides tapering to and terminating in an unrestricted lower valve-closed outlet; and a lower hopper with similarly inclined tapered sides surrounding the lower discharge valve-closed outlet of the upper hopper with a substantial clearance and terminating in a bottom connecting nozzle outlet to a coke-oven charging hole for connecting the lorry upper hopper with the charging hole; and in which the valve-closed outlet has a free-section larger than the connecting nozzle outlet, and terminates above the top of the connecting nozzle at a distance substantially greater than its own diametric dimension as to cause the coal material to flow when moist or sticky, through the valve-closed outlet and lower hopper to the charging hole without sticking, free from poking and scraping in the hoppers, the interior of the hoppers and outlet being entirely free from obstructions.

HEINRICH KOPPERS.