Sept. 5, 1939. A. MARCHAND 2,171,663

DRAWER-CONTROLLING MEANS FOR MEDICINE CABINETS

Filed July 8, 1938 2 Sheets-Sheet 1

FIG. 1.

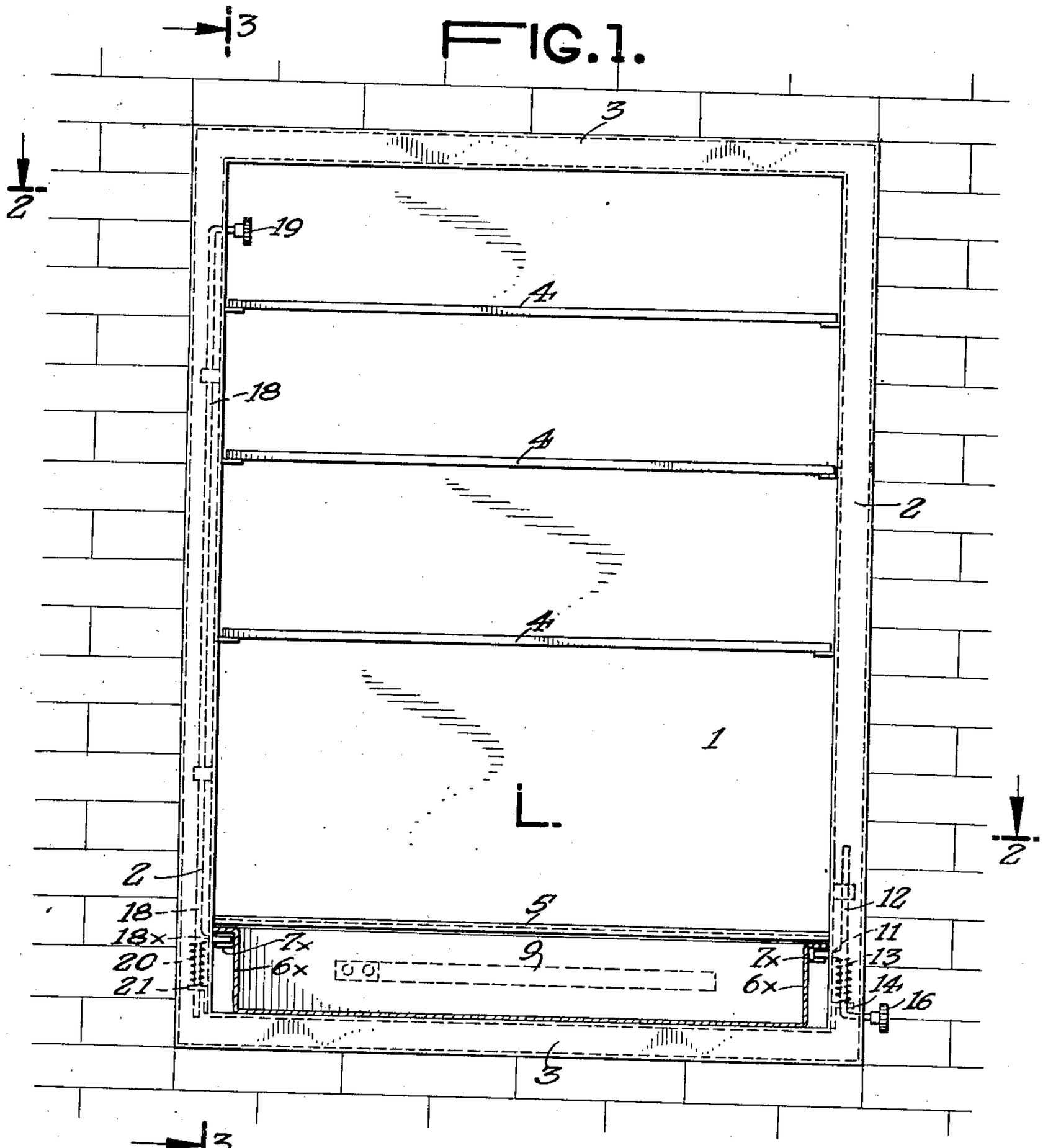

FIG. 2.

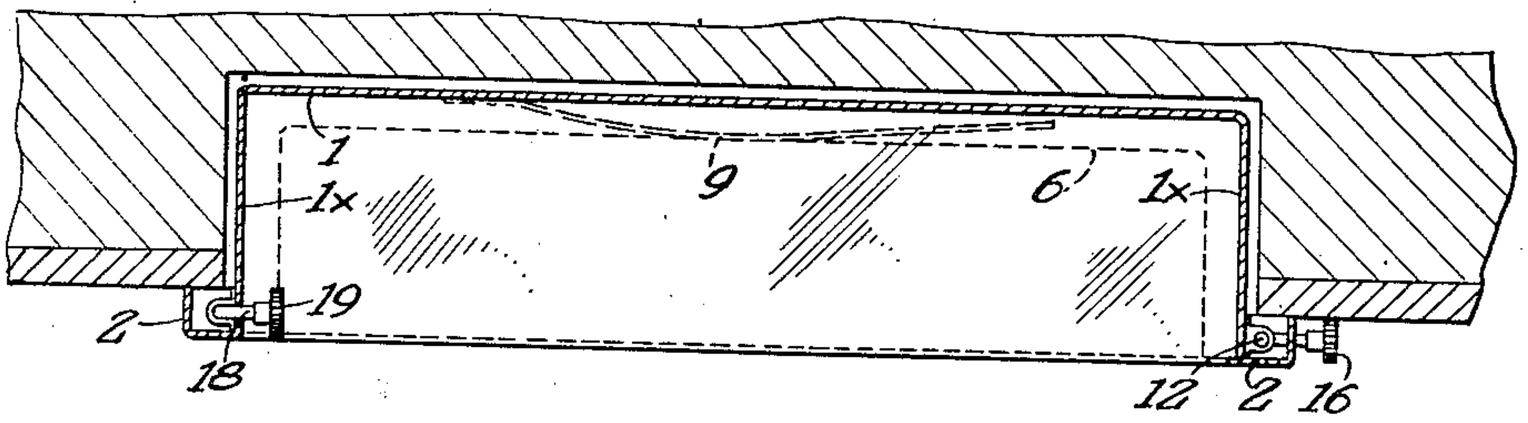

INVENTOR.
adolph Marchand

BY
H. Lee Helm

ATTORNEY.

Sept. 5, 1939. A. MARCHAND 2,171,663

DRAWER-CONTROLLING MEANS FOR MEDICINE CABINETS

Filed July 8, 1938 2 Sheets-Sheet 2

FIG. 3.

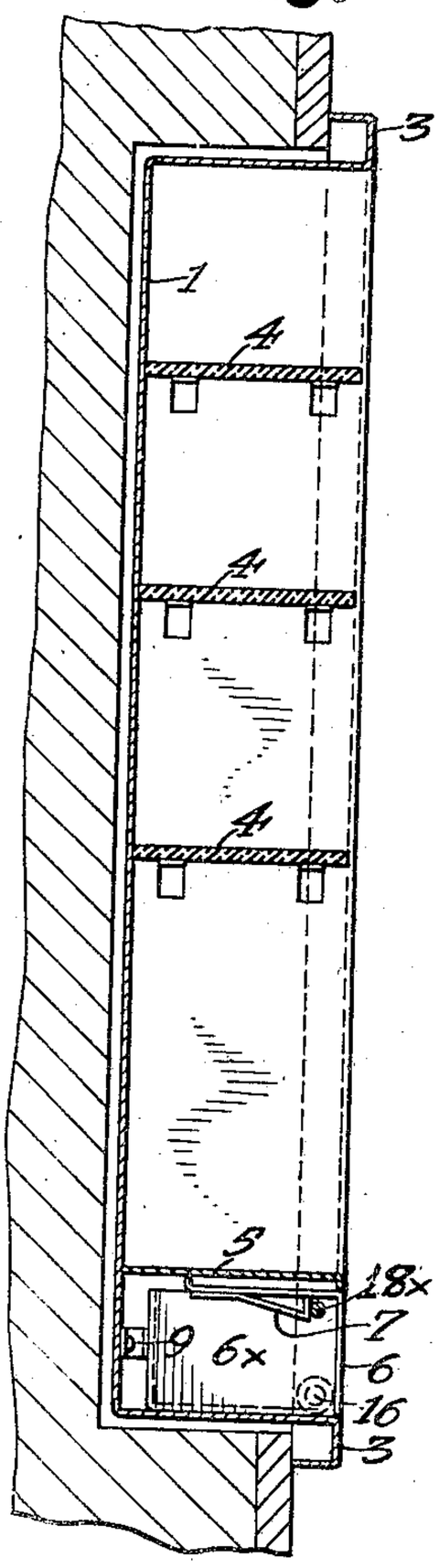

FIG. 4.

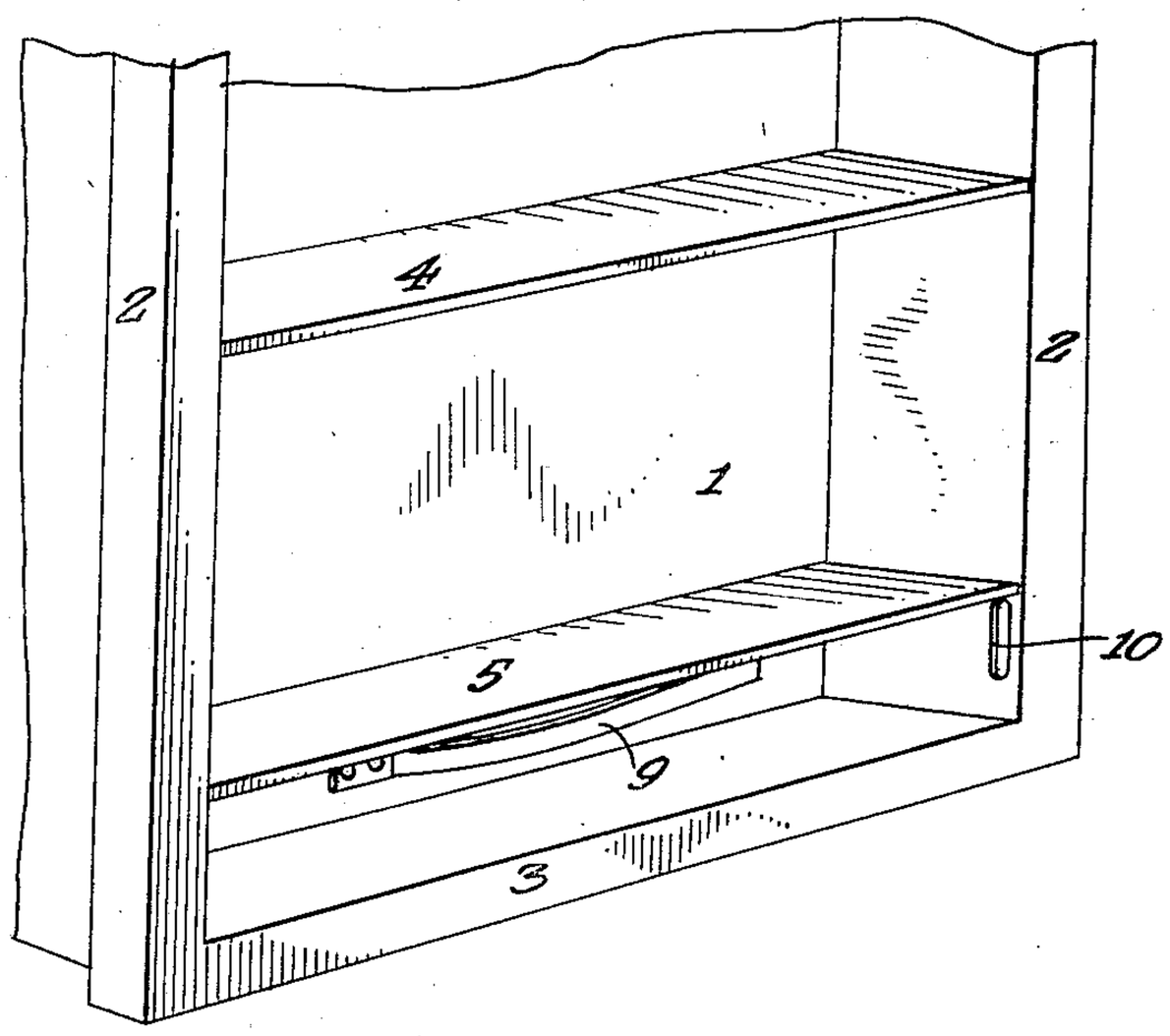

FIG. 5.

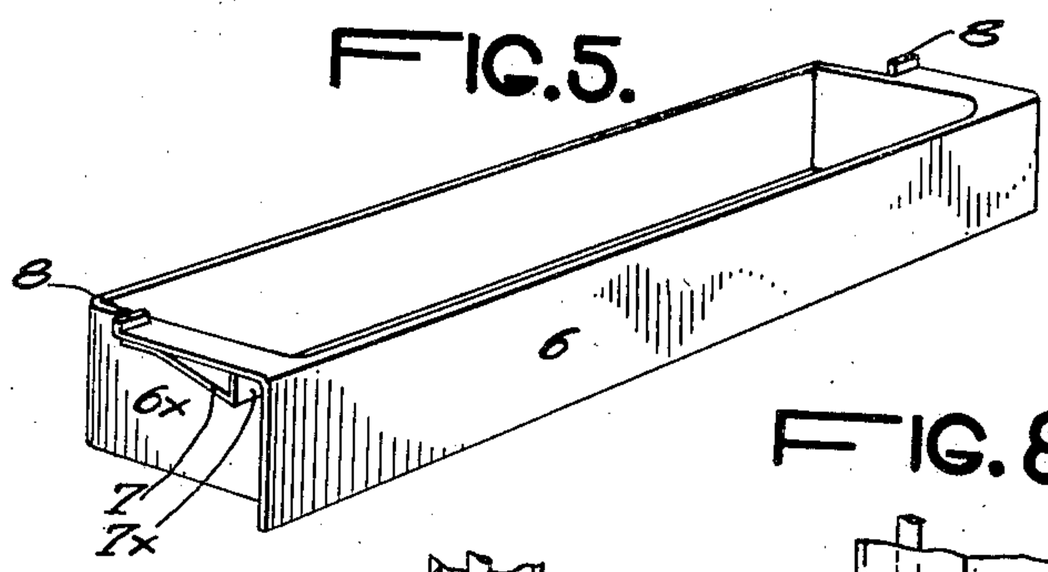

FIG. 6.

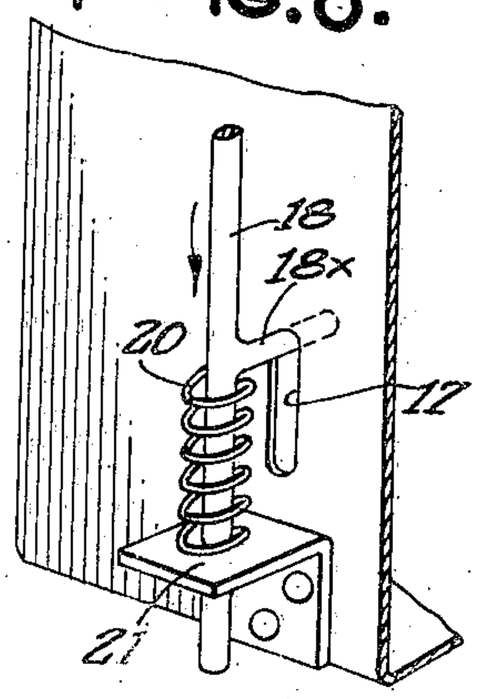

FIG. 7.

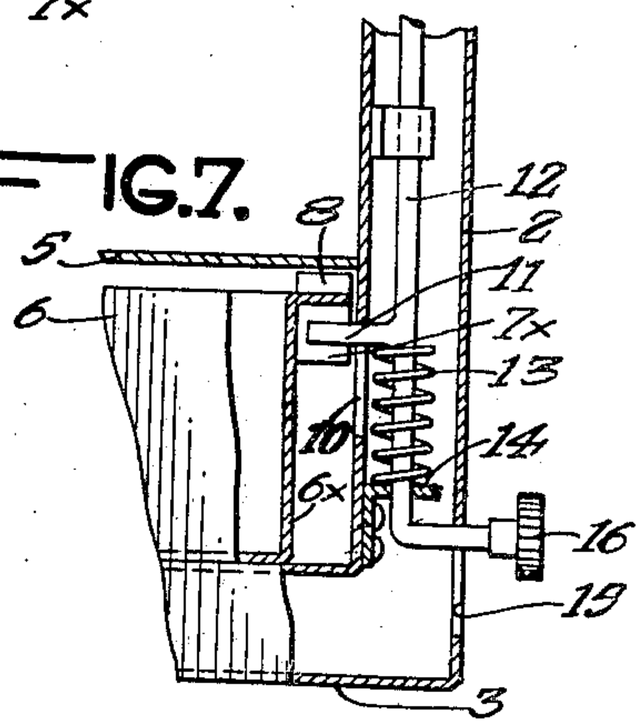

FIG. 8.

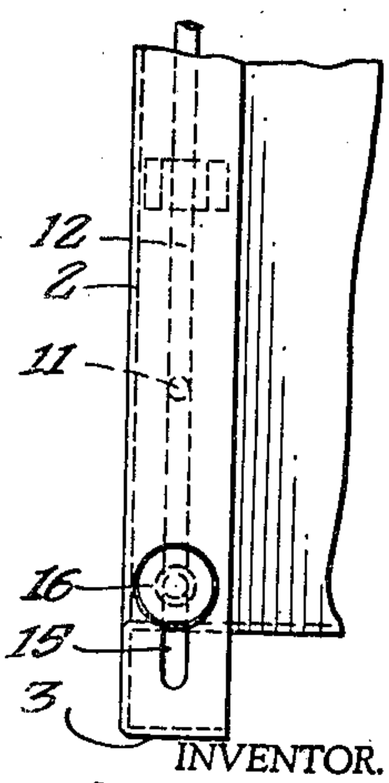

INVENTOR.
Adolph Marchand

BY
H. Lee Helms

ATTORNEY.

Patented Sept. 5, 1939 2,171,663

UNITED STATES PATENT OFFICE

2,171,663

DRAWER-CONTROLLING MEANS FOR MEDICINE CABINETS

Adolph Marchand, Jackson Heights, N. Y.

Application July 8, 1938, Serial No. 218,066

1 Claim. (Cl. 45—94)

The usual household medicine cabinet generally contains a number of commonly used antiseptics such as iodine and other drugs which are deleterious and even poisonous to the human system when taken internally. The object of my present invention is to provide a drawer for containing such articles and which, while avoiding the use of a key-lock, will safeguard the opening of the drawer by small children.

The principle of my invention is to provide two separate latching elements for the drawer, which elements must be operated simultaneously and which are so separated as to make it difficult, if not impossible, for a small child to operate the said latching means.

The separated latching members, requiring the use of both hands and arms simultaneously, are employed in conjunction with spring means for ejecting the drawer.

The invention will be described with reference to the accompanying drawings, in which:

Figure 1 is a view in elevation of an embodiment of the invention, certain parts being shown in dotted lines, and other parts in section.

Figure 2 is a horizontal section on the line 2—2, Figure 1.

Figure 3 is a vertical section on the line 3—3, Figure 1.

Figure 4 is a fragmentary perspective view showing the lower portion of the cabinet with the drawer removed.

Figure 5 is a perspective view of the drawer.

Figure 6 is an enlarged detailed view in perspective, showing the base portion of the left-hand latch member.

Figure 7 is a view in sectional elevation showing the lower portion of the right-hand latching member, the latter being in latching relation to the drawer, part of which is shown.

Figure 8 is a fragmentary side elevation of the structure shown in Figure 7.

Referring to the drawings, it will be seen that the form of the invention therein illustrated comprises a bath-room cabinet which is substantially counter-sunk. It comprises a casing having the rear wall 1 and side walls 1*x*, the latter being formed with outwardly extending box flanges 2 which merge with the top and bottom box flanges 3.

Within the casing may be suitably supported a plurality of shelves 4 and the bottom shelf 5 may be fixed in position as, for example, by spot welding, constituting the top of a drawer compartment. Into this compartment is adapted to slide a drawer 6, each end of the drawer being constructed as shown more particularly in Figures 3 and 4. It will be seen that the end wall 6*x* is inset and that adjacent thereto and spaced from the front wall of the drawer is a cam strip 7 having a latch-receiving vertical face 7*x*.

The horizontal portion of the drawer overlying each cam strip 7 carries an upwardly extending lug 8. The front edge of shelf 5 is turned down as shown in Figure 3 so that when the drawer is moved outwardly, lugs 8 will be engaged to prevent the drawer from being wholly withdrawn from the cabinet. To effect the outward movement of the drawer there is disposed at wall 1 a leaf spring 9 which is free at one end. When the drawer is moved inwardly the spring is compressed, and the release of the drawer will cause the spring to move it outwardly into open position. The drawer is held against release by the instrumentalities now to be described.

At the right-hand side of the cabinet the side wall is formed with an elongated slot at 10 and into the slot is projected a latch arm 11 carried by an operating rod 12, and the operating rod 12 is normally held in upward position by the action of a coil spring 13 which surrounds it and engages arm 11, the base of the spring bearing against the top of an angular plate 14.

The lower end of rod 12 is angularly bent and projected through a slot at 15, and a finger disk or handle 16 may be secured to the thus projected end of the rod. It will be seen that when the drawer is moved inwardly its right-hand cam strip 7 will lie over upon rod arm 11 causing the rod to be moved downwardly against the tension of spring 13 until shoulder 7*x* moves past the rod arm, enabling spring 13 to snap the rod upwardly, bringing arm 11 into latching relation to shoulder 7*x* as shown in Figure 7.

At the left-hand side of the cabinet, its side wall within box flange 2 is formed with an elongated aperture at 17, Figure 6, which receives latch arm 18*x* of a rod 18, which rod extends upwardly to the top area of the cabinet and its upper angularly bent section projects through an elongated slot similar to slot 17 and is provided with a finger disk or handle 19.

A spiral spring 20 encircles rod 18 below arm 18*x* and bears upon the latter, the lower end of the spring engaging a supporting bracket 21. When the drawer is moved inwardly the left-hand cam strip 7 will bear upon the top of arm 18*x* and gradually the arm will be moved downward until shoulder 7*x* passes it, whereupon spring 20 will snap the arm in front of the

shoulder and into latching engagement, as shown in Figure 3.

When either handle 16 or 19 is operated to move downward its appropriate rod, no action upon drawer 6 ensues. Therefore, a child may move either of the rods without opening the drawer. It is necessary to grasp the handles 16 and 19 and move the rods simultaneously. When this is done, the spring 9 will move the drawer outwardly and access will be had to its contents.

Having described my invention, what I claim and desire to secure by Letters Patent, is as follows:

Drawer-controlling means for medicine cabinets comprising a casing having rectangular parallel sides, a base wall and a top wall, box flanges carried by the side walls, a rod disposed in each box flange and having a latching arm projected through the adjacent side wall, a drawer slidably disposed intermediate each of said arms, a latching cam adjacent each arm, a spring tending to move the drawer to open position, spring means for engaging said rods, a manual operating member carried by one rod and projected through the box flange in which it is disposed, and a manual operating member connected to the second rod and projected through the box flange in which it is disposed, whereby for release of the drawer the rods must be independently actuated to simultaneously lie in such position that the rod arms are retracted from the latch cams, the latch cams being adapted to automatically return the arms to latching position upon closure of the drawer against the tension of its spring.

ADOLPH MARCHAND.