May 30, 1939. E. J. HUOTT 2,160,661

PENHOLDER FOR INKSTANDS

Filed July 28, 1938

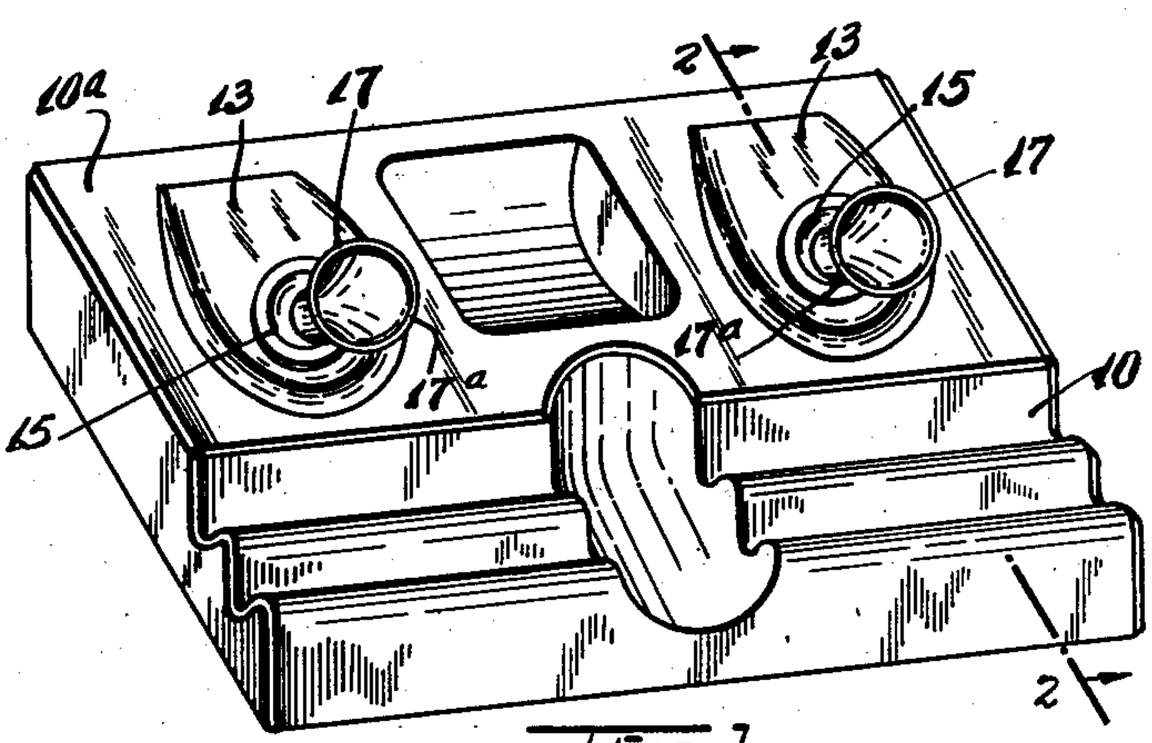

Fig. 1.

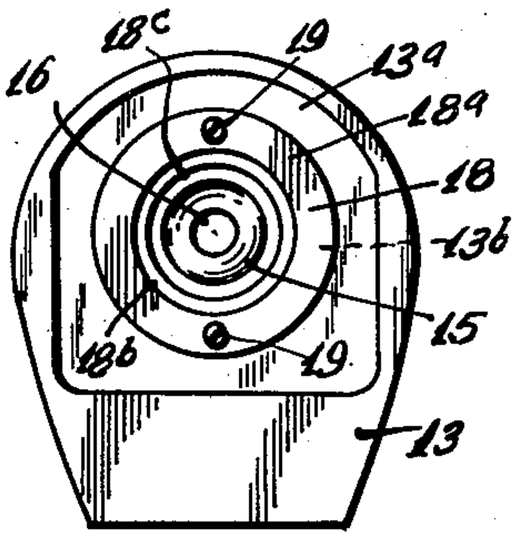

Fig. 3.

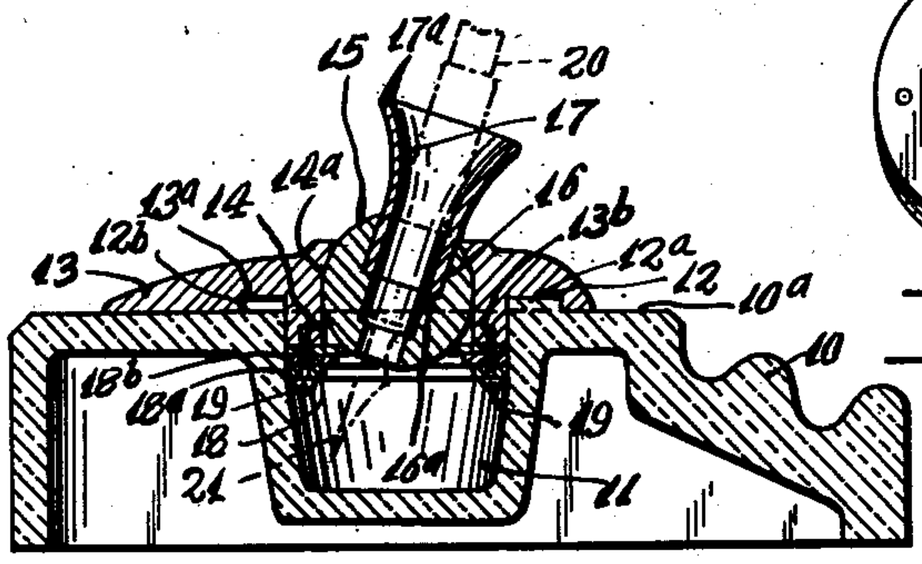

Fig. 2.

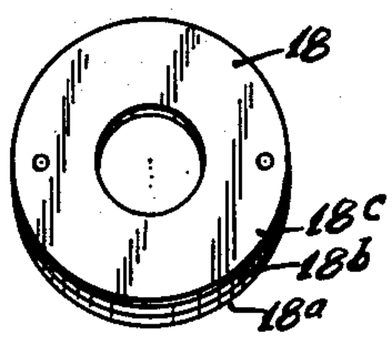

Fig. 4.

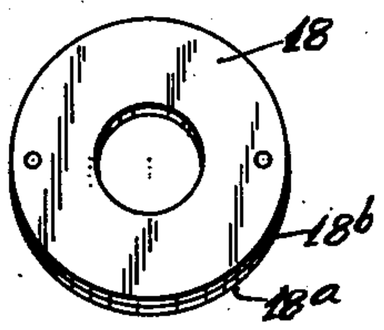

Fig. 8.

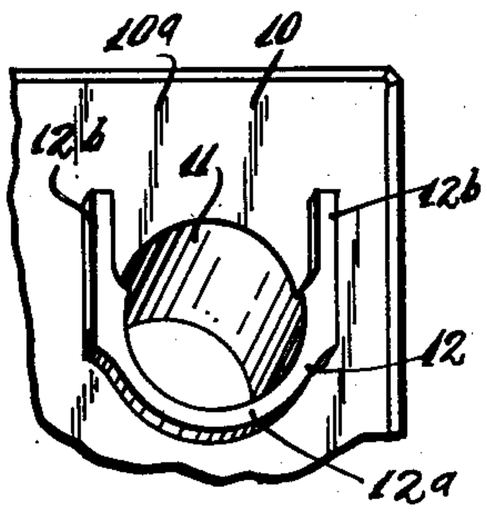

Fig. 5.

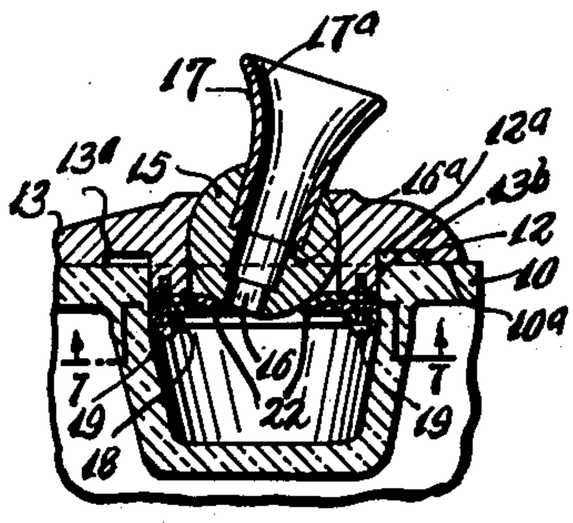

Fig. 6.

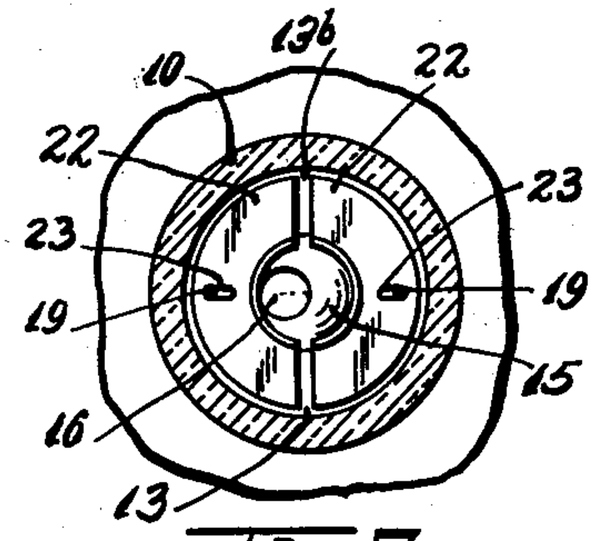

Fig. 7.

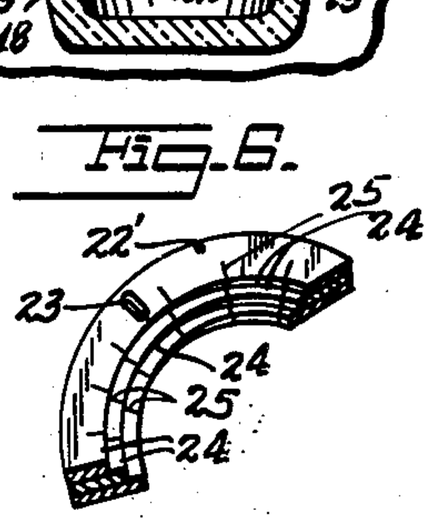

Fig. 10.

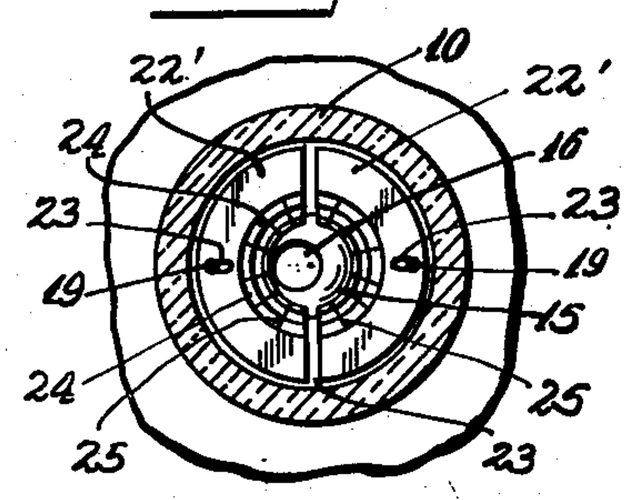

Fig. 9.

INVENTOR
Edmond J. Huott
BY Zoltan Polachek
ATTORNEY

Patented May 30, 1939

2,160,661

UNITED STATES PATENT OFFICE

2,160,661

PENHOLDER FOR INKSTANDS

Edmond J. Huott, New York, N. Y.

Application July 28, 1938, Serial No. 221,655

8 Claims. (Cl. 120—4)

This invention relates to new and useful improvements in a pen holder for ink stands.

Still further the invention proposes the construction of a pen holder for ink stands characterized by the combination of an ink stand having an ink holding opening surrounded with a flange extending around the front side and having straight rearwardly extending sides upon which a substantially flat body having a recess for the flange is adapted to be positioned.

Still further the invention proposes the provision of a cylindrical projection formed on the substantially flat body and engageable partially into the ink holding opening and having a cylindrical opening extending in from the bottom and terminating at the top of the body in a slightly contracted spherical zone portion.

A further object of this invention is the provision of a ball disposed within the cylindrical opening and resting against the spherical zone portion and having an opening extending therethrough and into which the bottom end of a tube having an outwardly flaring end is mounted for receiving the point end of a pen holder.

Still further it is proposed to provide an annular member mounted on the bottom of the cylindrical portion and frictionally engaging against the bottom of the ball for maintaining the ball in position within the cylindrical opening and for maintaining the ball in various pivoted positions within the cylindrical opening.

A further object of this invention is the provision of a pair of semi-circular members engaged between the adjacent faces of the annular member and the cylindrical projections and adjustable to bear against the ball in varying degrees to control the movement of the ball within the cylindrical opening.

Still further it is proposed to provide each of the semi-circular members with a plurality of slits and score lines for adding to the resiliency thereof in the operative position of the semi-circular members.

For further comprehension of the invention, and of the objects and advantages thereof, reference will be had to the following description and accompanying drawing, and to the appended claims in which the various novel features of the invention are more particularly set forth.

In the accompanying drawing forming a material part of this disclosure:

Fig. 1 is a perspective view of an ink stand having pen holders constructed according to this invention.

Fig. 2 is an enlarged sectional view taken on the line 2—2 of Fig. 1.

Fig. 3 is a bottom plan view of one of the pen holders per se.

Fig. 4 is a perspective view of the annular member per se.

Fig. 5 is a perspective view of one of the ink holding openings and the flange extending thereabout.

Fig. 6 is an enlarged view similar to a portion of Fig. 2 but illustrating a modification of the invention.

Fig. 7 is a sectional view on the line 7—7 of Fig. 6.

Fig. 8 is a perspective view of the annular member used in conjunction with this modification.

Fig. 9 is a view similar to Fig. 7 illustrating a still further modification.

Fig. 10 is a perspective view of one of the semi-circular members per se.

The pen holder, according to this invention, is to be used in combination with an ink stand 10 constructed of glass or similar material and having a flat top 10a with one or more ink holding openings 11. A flange 12 surrounds the opening and has a portion 12a extending across the front of the opening and straight rearwardly extending sides 12b continuing from each end of the portion 12a.

The pen holder includes a substantially flat body 13 which is adapted to be rested on the top face of the flat top 10a of the ink stand 10. The flat body 13 is constructed of Bakelite or similar material and is formed in its bottom faces with an inwardly extending recess 13a into which all portions of the flange 12 are adapted to extend (see Fig. 2). The bottom face of the flat body is further formed with a downwardly extending cylindrical projection 13b which extends partially into the ink holding opening and which is formed with a cylindrical opening 14 extending in from the bottom end thereof and terminating at its top in a slightly contracted spherical zone portion 14a.

A ball 15 constructed of substantially the same material as the flat body 13 is disposed within the cylindrical opening 14 and has one of its sides normally resting against the spherical zone portion 14a. The ball 15 is formed with an opening 16 which extends diametrically through the center of the ball and which is formed with a shoulder 16a near one end thereof. A tube 17 having an outwardly flared end 17a has its inner end extending into the opening 16 formed in

the ball 15 with its bottom end bearing against the shoulder 16a for preventing the tube from being pushed entirely into the ball 15.

An annular member 18 is mounted on the bottom end of the cylindrical projection 13b and is maintained in position by means of screws 19 and normally frictionally engages against the bottom of the ball 15 for maintaining the same in various adjusted positions within the cylindrical opening 14 formed in the cylindrical projection 13b. This annular member 18 is formed of a separate laminations 18a, 18b, etc., fixedly attached together in face contact for adding to the resiliency thereof to cause the innermost lamination to have its inner edge portion bearing against the ball 15.

In normal use, the pen holder is positioned upon the ink stand with the flange 12 extending into the recess 13a. A pen holder, illustrated by the dot and dash lines 20 in Fig. 2, is adapted to be slipped into the tube 17 from the flared end 17a thereof with the pen point 21 extending into the ink holding opening 11 to contact the ink supply therein. It is possible to pivot the ball 15 to change the position of the tube 17a to permit the pen holder 20 to be easily inserted and removed from the tube 17.

According to the modification of the invention shown in Figs. 6–8 inclusive, a means is provided for permitting the resiliency with which the ball 15 is maintained in position within the cylindrical opening to be easily varied. This means comprises a pair of semi-circular members constructed of resilient material and inserted between the adjacent face of the annular member 18 and the cylindrical projection 13b. These semi-circular members are formed with elongated slots 23 through which the screws 19 are adapted to pass to permit the members 22 to be moved in and out with relation to the open end of the ball 15 in the loosened position of the screws 19 for controlling the resiliency with which the members 22 will bear against the ball 15. In other respects this form of the invention is similar to the previous form.

According to the modification shown in Figs. 9 and 10 each of the semi-circular members 22′ is formed with a plurality of circular score lines 24 extended inwards from the operative edge thereof. Each of the semi-circular members 22′ is formed with a plurality of radially inwardly extended slits also extending inwards from the operative edge thereof. These score lines and slits 25 add to the resiliency of the operative edge of each of the semi-circular members 22′. In other respects this form of the invention is similar to the previous forms.

While I have illustrated and described the preferred embodiments of my invention, it is to be understood that I do not limit myself to the precise constructions herein disclosed and the right is reserved to all changes and modifications coming within the scope of the invention as defined in the appended claims.

Having thus described my invention, what I claim as new, and desire to secure by United States Letters Patent is:

1. In combination with an ink stand having a flat top with an ink holding opening surrounded with a flange extending across the front of the opening and straight rearwards at the sides, a substantially flat body for resting on the top face of said flat top and having a recess for said flange and a cylindrical projection engaging partially into said ink holding opening and formed with a cylindrical opening extended in from the bottom and terminating at the top of said body in a slightly contracted spherical zone portion, a ball disposed in said cylindrical opening and resting against said spherical zone portion, a tube having an outwardly flaring end and mounted at its inner end in an opening extending through said ball, and an annular member mounted on the bottom of said cylindrical projection and frictionally engaging said ball.

2. In combination with an ink stand having a flat top with an ink holding opening surrounded with a flange extending across the front of the opening and straight rearwards at the sides, a substantially flat body for resting on the top face of said flat top and having a recess for said flange and a cylindrical projection engaging partially into said ink holding opening and formed with a cylindrical opening extended in from the bottom and terminating at the top of said body in a slightly contracted spherical zone portion, a ball disposed in said cylindrical opening and resting against said spherical zone portion, a tube having an outwardly flaring end and mounted at its inner end in an opening extending through said ball, and an annular member mounted on the bottom of said cylindrical projection and frictionally engaging said ball, said ball having such a diameter that its opposite sides will extend beyond the top and bottom edges of said cylindrical opening.

3. In combination with an ink stand having a flat top with an ink holding opening surrounded with a flange extending across the front of the opening and straight rearwards at the sides, a substantially flat body for resting on the top face of said flat top and having a recess for said flange and a cylindrical projection engaging partially into said ink holding opening and formed with a cylindrical opening extended in from the bottom and terminating at the top of said body in a slightly contracted spherical zone portion, a ball disposed in said cylindrical opening and resting against said spherical zone portion, a tube having an outwardly flaring end and mounted at its inner end in an opening extending through said ball, and an annular member mounted on the bottom of said cylindrical projection and frictionally engaging said ball, said opening in said ball being formed with a shoulder near the bottom end thereof and against which the bottom end of said tube is adapted to strike for preventing said tube from being pushed entirely through said ball.

4. In combination with an ink stand having a flat top with an ink holding opening surrounded with a flange extending across the front of the opening and straight rearwards at the sides, a substantially flat body for resting on the top face of said flat top and having a recess for said flange and a cylindrical projection engaging partially into said ink holding opening and formed with a cylindrical opening extended in from the bottom and terminating at the top of said body in a slightly contracted spherical zone portion, a ball disposed in said cylindrical opening and resting against said spherical zone portion, a tube having an outwardly flaring end and mounted at its inner end in an opening extending through said ball, and an annular member mounted on the bottom of said cylindrical projection and frictionally engaging said ball, said tube being adapted to receive the point end of a pen holder in such a manner that the pen point will extend into

the ink holding opening to contact ink contained therein.

5. In combination with an ink stand having a flat top with an ink holding opening surrounded with a flange extending across the front of the opening and straight rearwards at the sides, a substantially flat body for resting on the top face of said flat top and having a recess for said flange and a cylindrical projection engaging paritally into said ink holding opening and formed with a cylindrical opening extended in from the bottom and terminating at the top of said body in a slightly contracted spherical zone portion, a ball disposed in said cylindrical opening and resting against said spherical zone portion, a tube having an outwardly flaring end and mounted at its inner end in an opening extending through said ball, and an annular member mounted on the bottom of said cylindrical projection and frictionally engaging said ball, said annular member being held in position by means of screws passing through openings formed therein and threadedly engaged into the bottom end of said cylindrical projection.

6. In combination with an ink stand having a flat top with an ink holding opening surrounded with a flange extending across the front of the opening and straight rearwards at the sides, a substantially flat body for resting on the top face of said flat top and having a recess for said flange and a cylindrical projection engaging partially into said ink holding opening and formed with a cylindrical opening extended in from the bottom and terminating at the top of said body in a slightly contracted spherical zone portion, a ball disposed in said cylindrical opening and resting against said spherical zone portion, a tube having an outwardly flaring end and mounted at its inner end in an opening extending through said ball, and an annular member mounted on the bottom of said cylindrical projection and frictionally engaging said ball, said annular member being constructed of separate laminations fixedly attached together in face contact with each other for adding to the resiliency of said member.

7. In combination with an ink stand having a flat top with an ink holding opening surrounded with a flange extending across the front of the opening and straight rearwards at the sides, a substantially flat body for resting on the top face of said flat top and having a recess for said flange and a cylindrical projection engaging partially into said ink holding opening and formed with a cylindrical opening extended in from the bottom and terminating at the top of said body in a slightly contracted spherical zone portion, a ball disposed in said cylindrical opening and resting against said spherical zone portion, a tube having an outwardly flaring end and mounted at its inner end in an opening extending through said ball, and an annular member mounted on the bottom of said cylindrical projection and frictionally engaging said ball, and a pair of semi-circular members engaged between the adjacent faces of said annular member and the bottom end of said cylindrical projection, said members being adjustable to control the resiliency with which said semi-circular members will bear against said ball.

8. In combination with an ink stand having a flat top with an ink holding opening surrounded with a flange extending across the front of the opening and straight rearwards at the sides, a substantially flat body for resting on the top face of said flat top and having a recess for said flange and a cylindrical projection engaging partially into said ink holding opening and formed with a cylindrical opening extended in from the bottom and terminating at the top of said body in a slightly contracted spherical zone portion, a ball disposed in said cylindrical opening and resting against said spherical zone portion, a tube having an outwardly flaring end and mounted at its inner end in an opening extending through said ball, and an annular member mounted on the bottom of said cylindrical projection and frictionally engaging said ball, and a pair of semi-circular members engaged between the adjacent faces of said annular member and the bottom end of said cylindrical projection, said members being adjustable to control the resiliency with which said semi-circular members will bear against said ball, each of said semi-circular members being formed with a plurality of score lines extended in from the operative edge thereof and a plurality of radially extending slits extending inwards from the operative edge thereof to add to the resiliency of said semi-circular members.

EDMOND J. HUOTT.