US 20230376125A1

(19) United States
(12) Patent Application Publication
Shin et al.
(10) Pub. No.: US 2023/0376125 A1
(43) Pub. Date: Nov. 23, 2023

(54) **PASSIVE-ACCESSORY MEDIATED GESTURE INTERACTION WITH A HEAD-MOUNTED DEVICE**

(71) Applicant: **Google LLC**, Mountain View, CA (US)

(72) Inventors: **Dongeek Shin**, Santa Clara, CA (US); **Ricardo John Campbell**, Redwood City, CA (US)

(21) Appl. No.: **17/663,978**

(22) Filed: **May 18, 2022**

Publication Classification

(51) **Int. Cl.**
G06F 3/0346 (2006.01)
G06F 3/01 (2006.01)

(52) **U.S. Cl.**
CPC ***G06F 3/0346*** (2013.01); ***G06F 3/017*** (2013.01); ***G06F 3/012*** (2013.01); *G06F 2203/0331* (2013.01)

(57) **ABSTRACT**

Physical gestures may be performed by a user to interact with a head-mounted device. These physical gestures can be detected by other devices worn by the user. For example, a fitness tracker worn on a wrist of a user may be used to detect the movement of the wrist as a gesture and then communicate this gesture to the head-mounted device. This accessory-mediated gesture interaction may be interrupted when the accessory device loses power or otherwise stops tracking. In this condition, the disclosed head-mounted device may take-over gesture detection by monitoring distortions to a magnetic field caused by movement of the device. This form of gesture detection can be used when an active device has exhausted its battery. Further, this form of gesture detection can be used for electrically inactive objects that can cause detectable changes to the magnetic field when moved in the magnetic field.

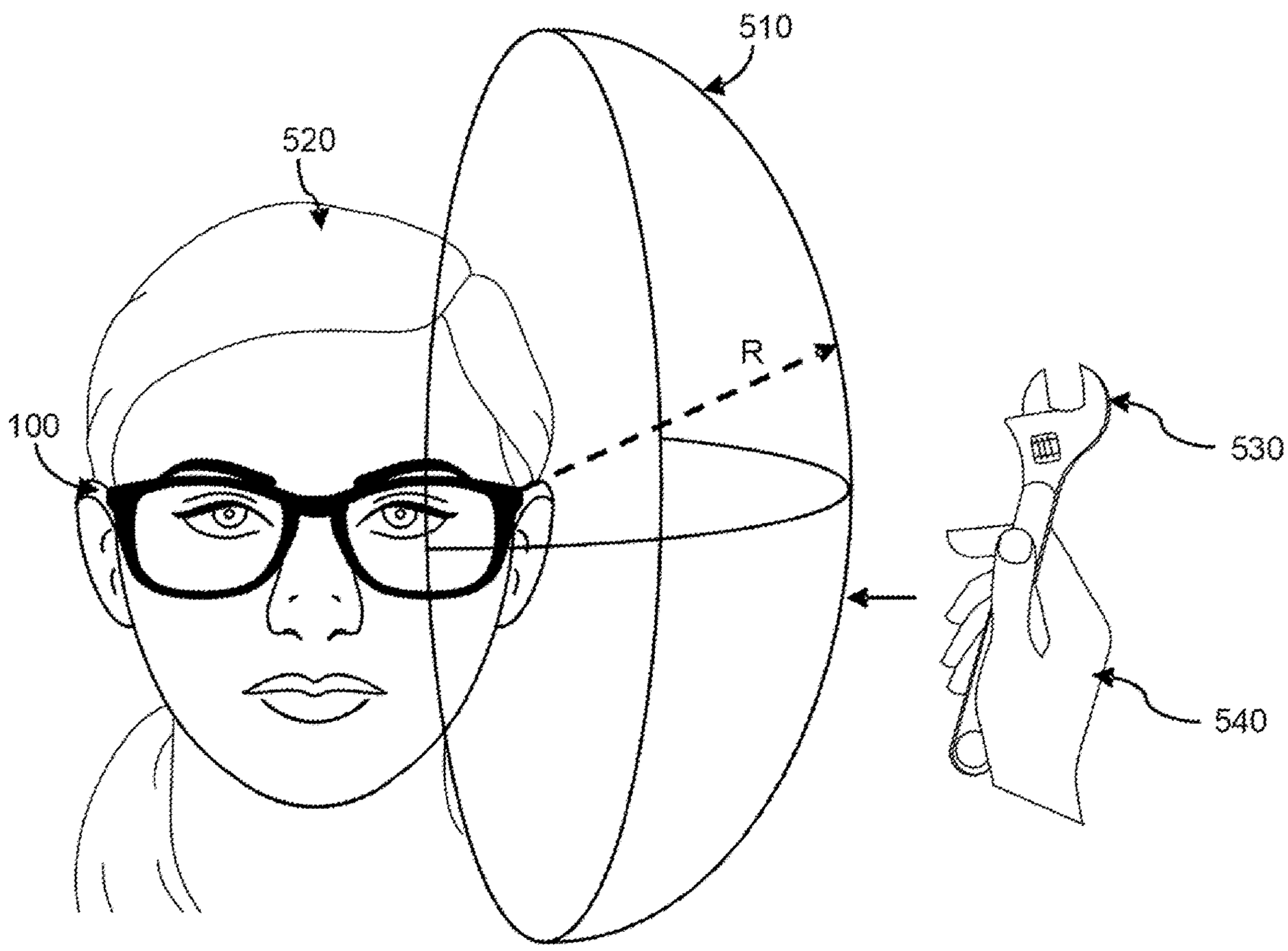

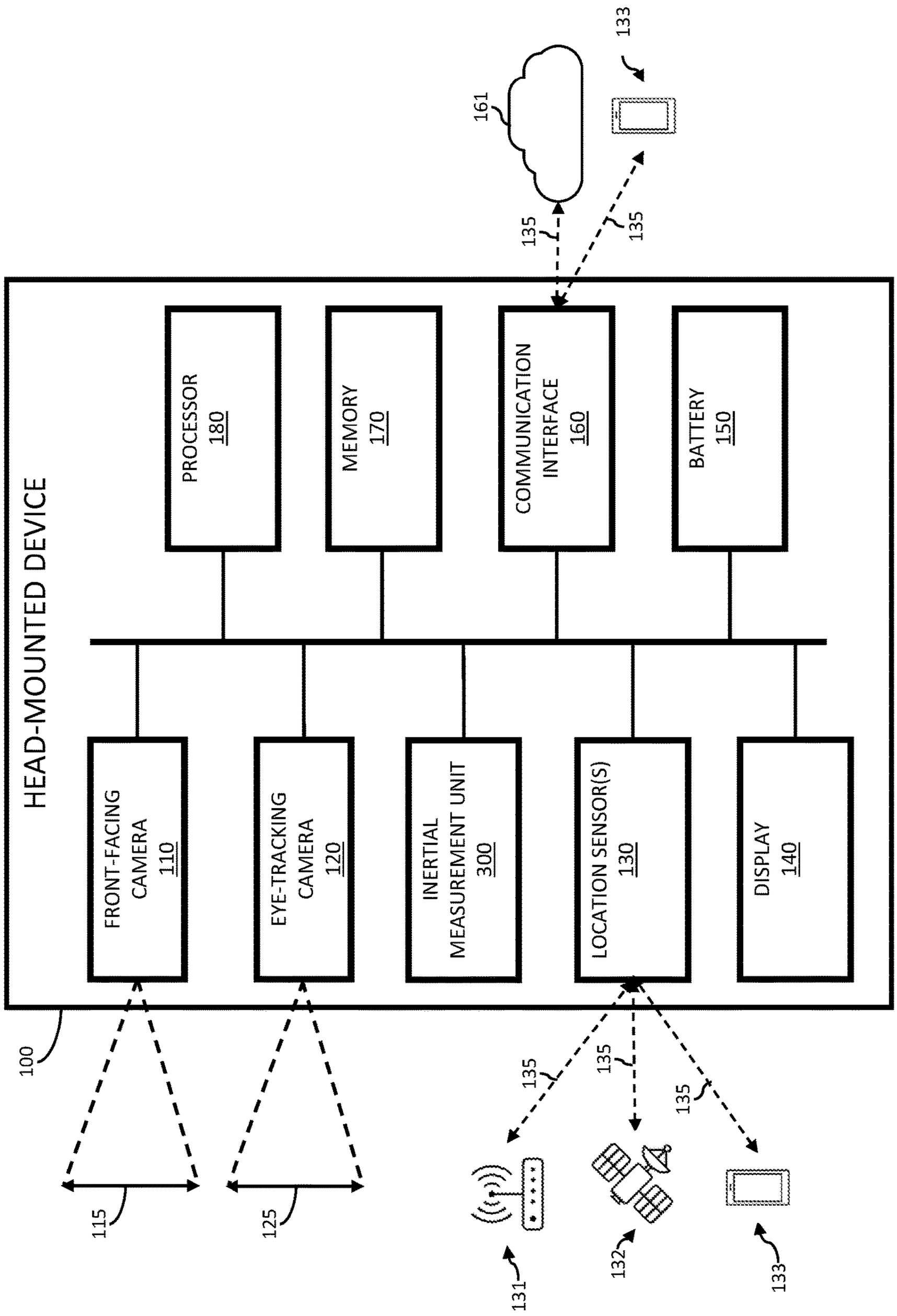
HEAD-MOUNTED DEVICE
100
FRONT-FACING CAMERA 110
EYE-TRACKING CAMERA 120
INERTIAL MEASUREMENT UNIT 300
LOCATION SENSOR(S) 130
DISPLAY 140
PROCESSOR 180
MEMORY 170
COMMUNICATION INTERFACE 160
BATTERY 150
115
125
135
135
135
135
131
132
133
161
133

FIG. 1

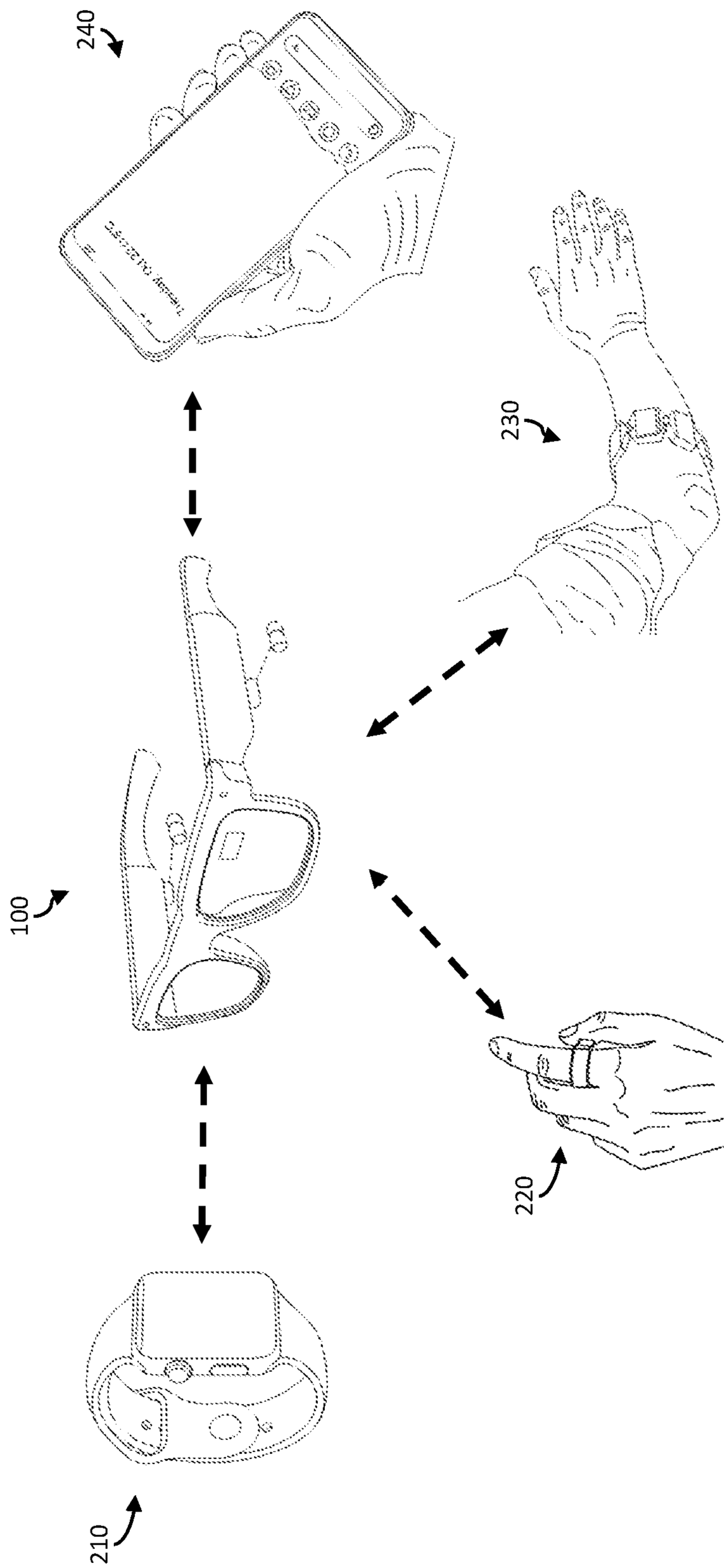

FIG. 2

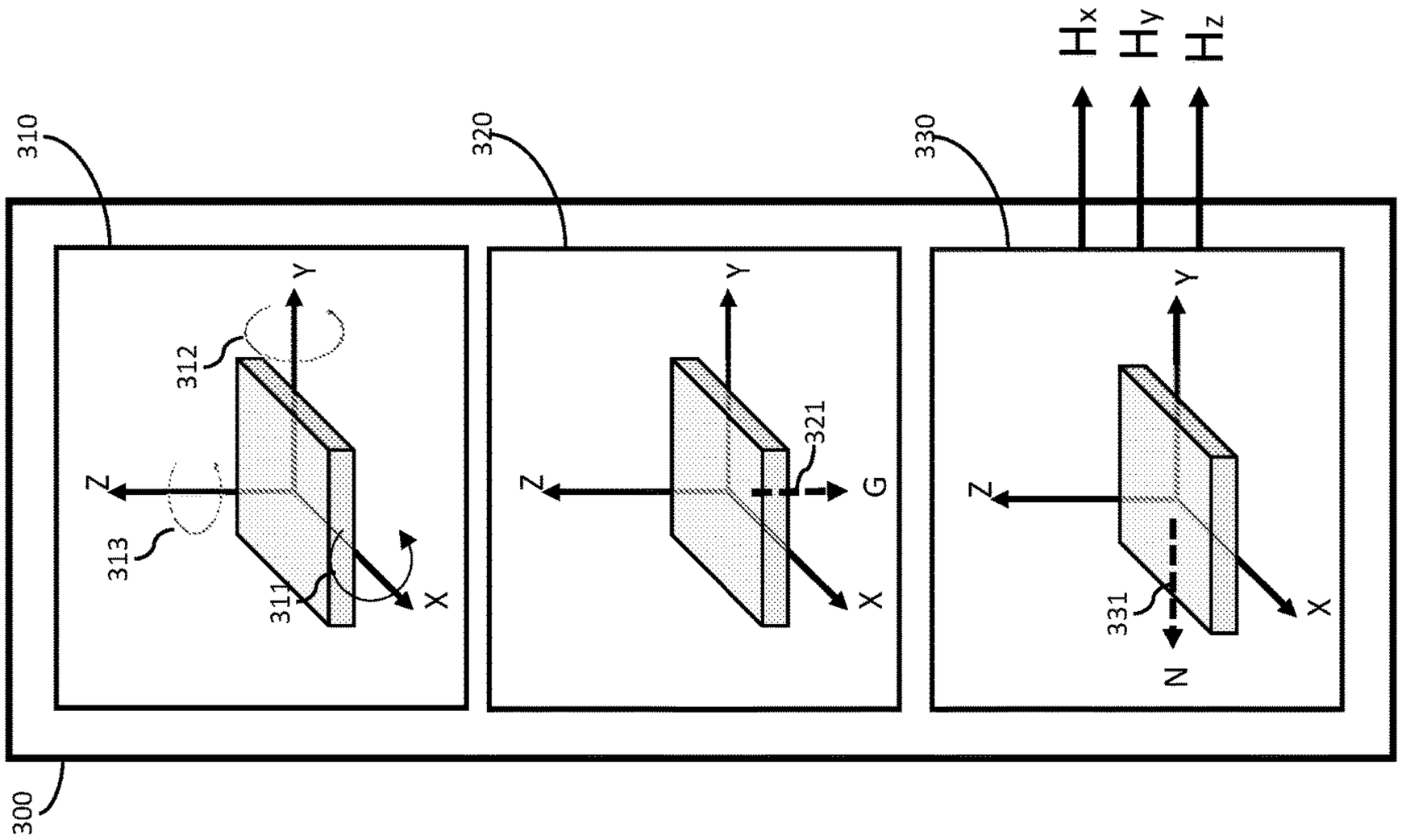

FIG. 3

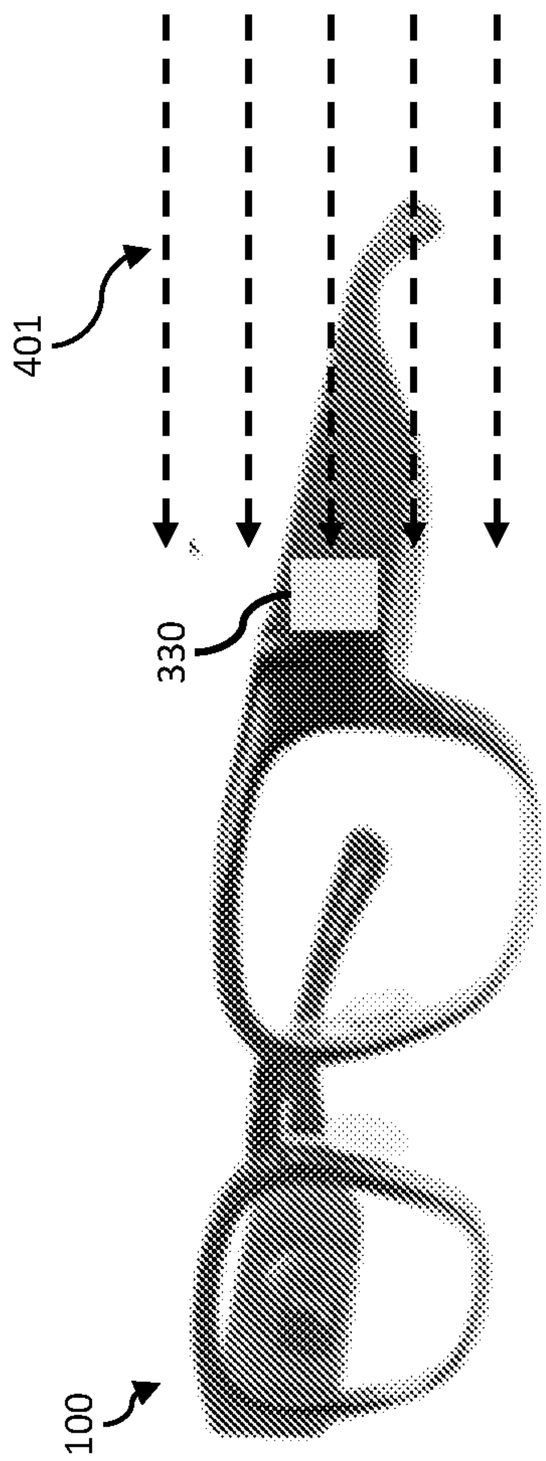

FIG. 4A

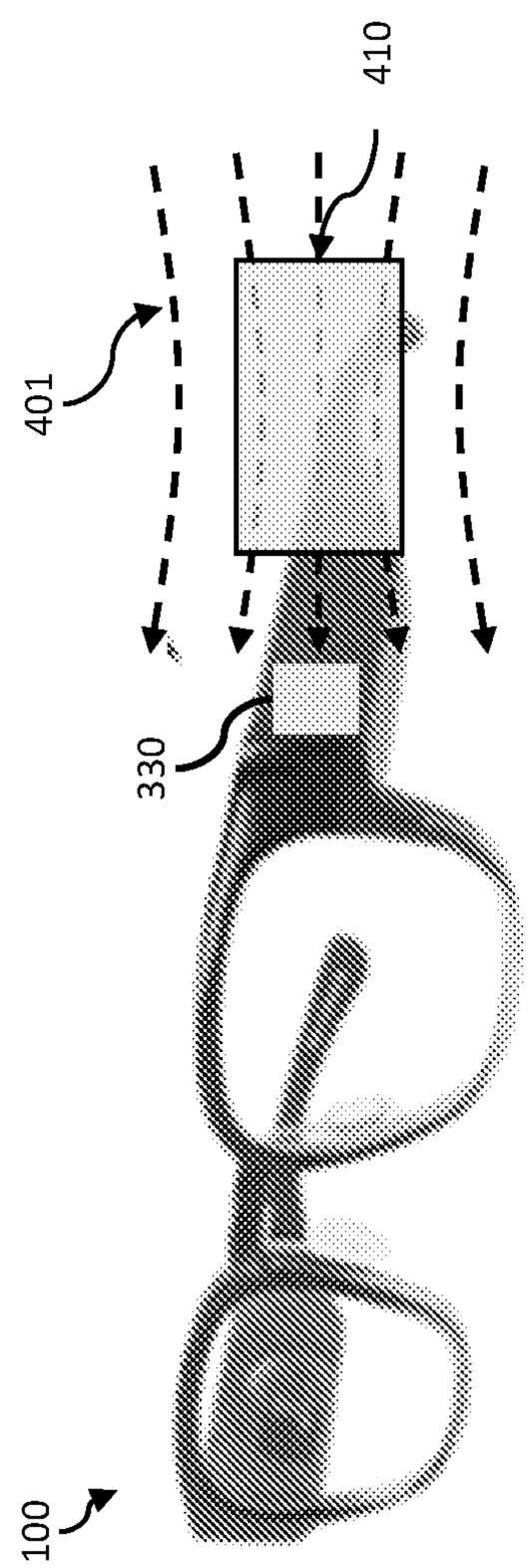

FIG. 4B

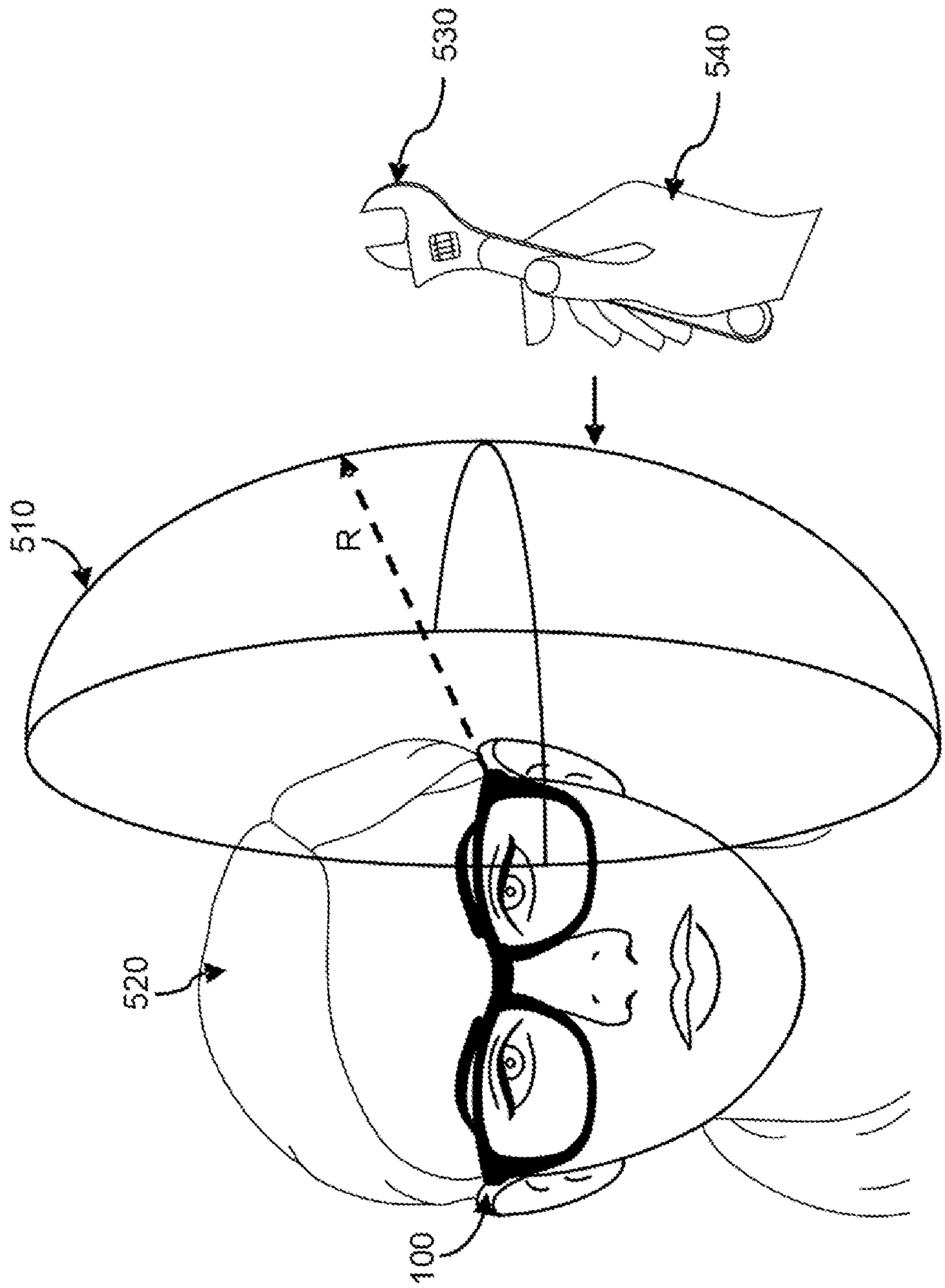

FIG. 5

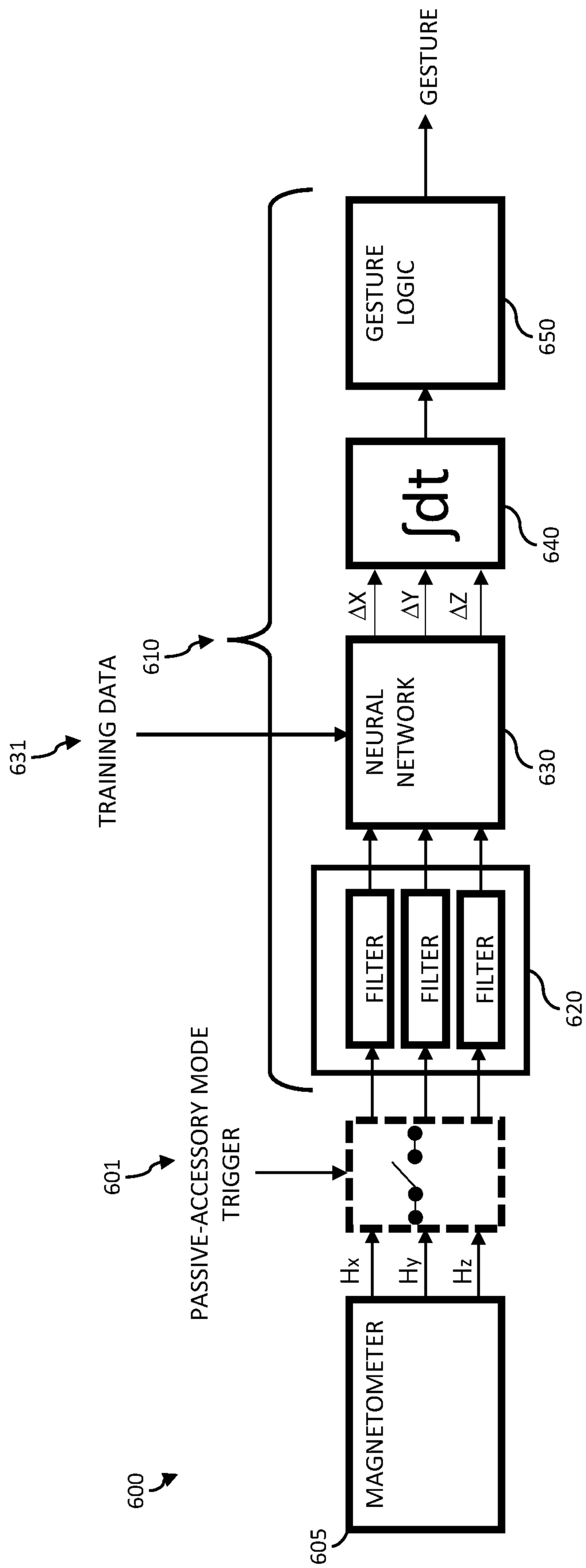
GESTURE
GESTURE LOGIC
650
∫dt
640
ΔX
ΔY
ΔZ
610
631
TRAINING DATA
NEURAL NETWORK
630
FILTER
FILTER
FILTER
620
601
PASSIVE-ACCESSORY MODE TRIGGER
Hx
Hy
Hz
600
MAGNETOMETER
605

FIG. 6

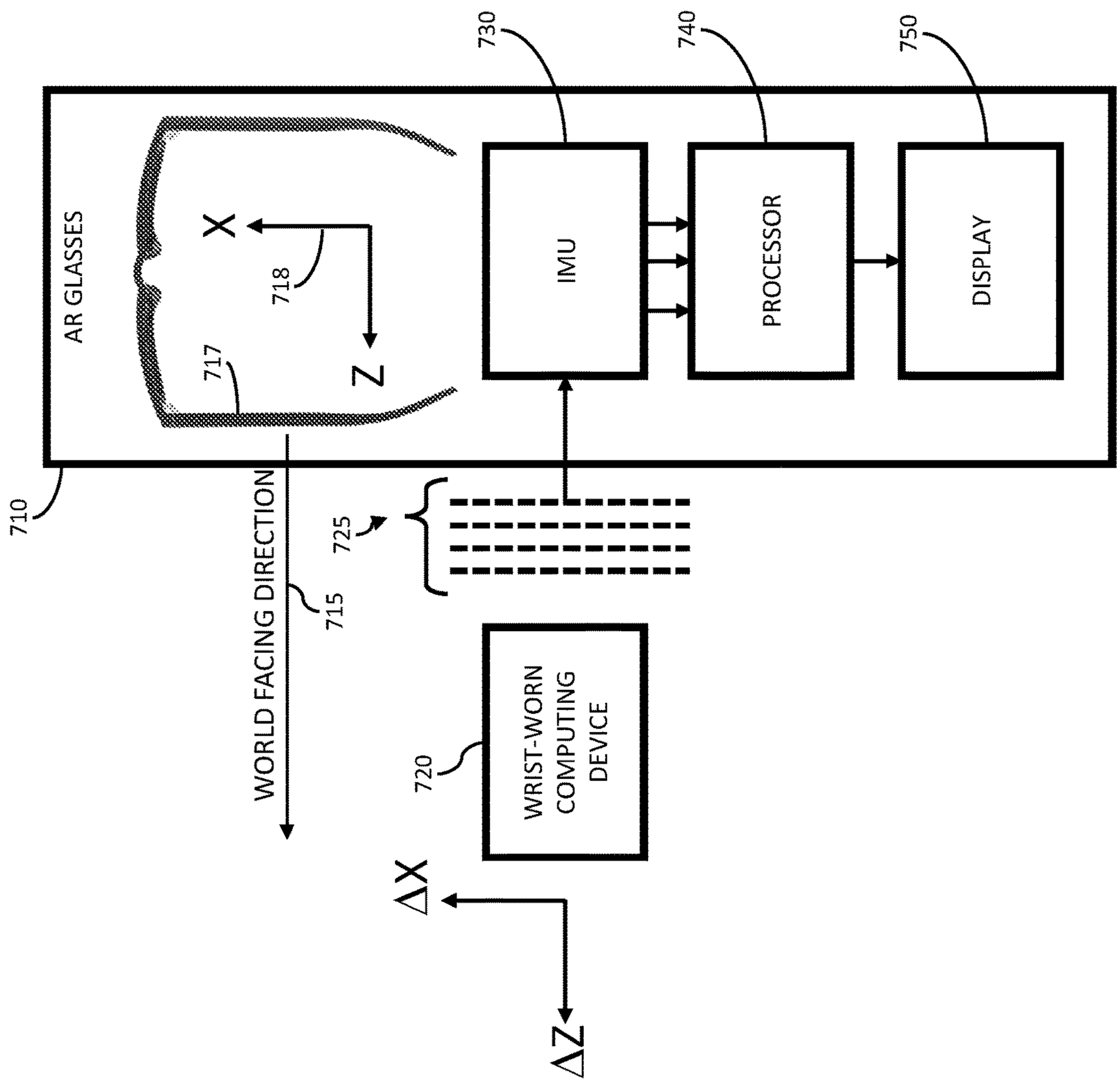
730
740
750
AR GLASSES
X
718
Z
717
IMU
PROCESSOR
DISPLAY
710
WORLD FACING DIRECTION
715
725
720
WRIST-WORN COMPUTING DEVICE
ΔX
ΔZ

FIG. 7

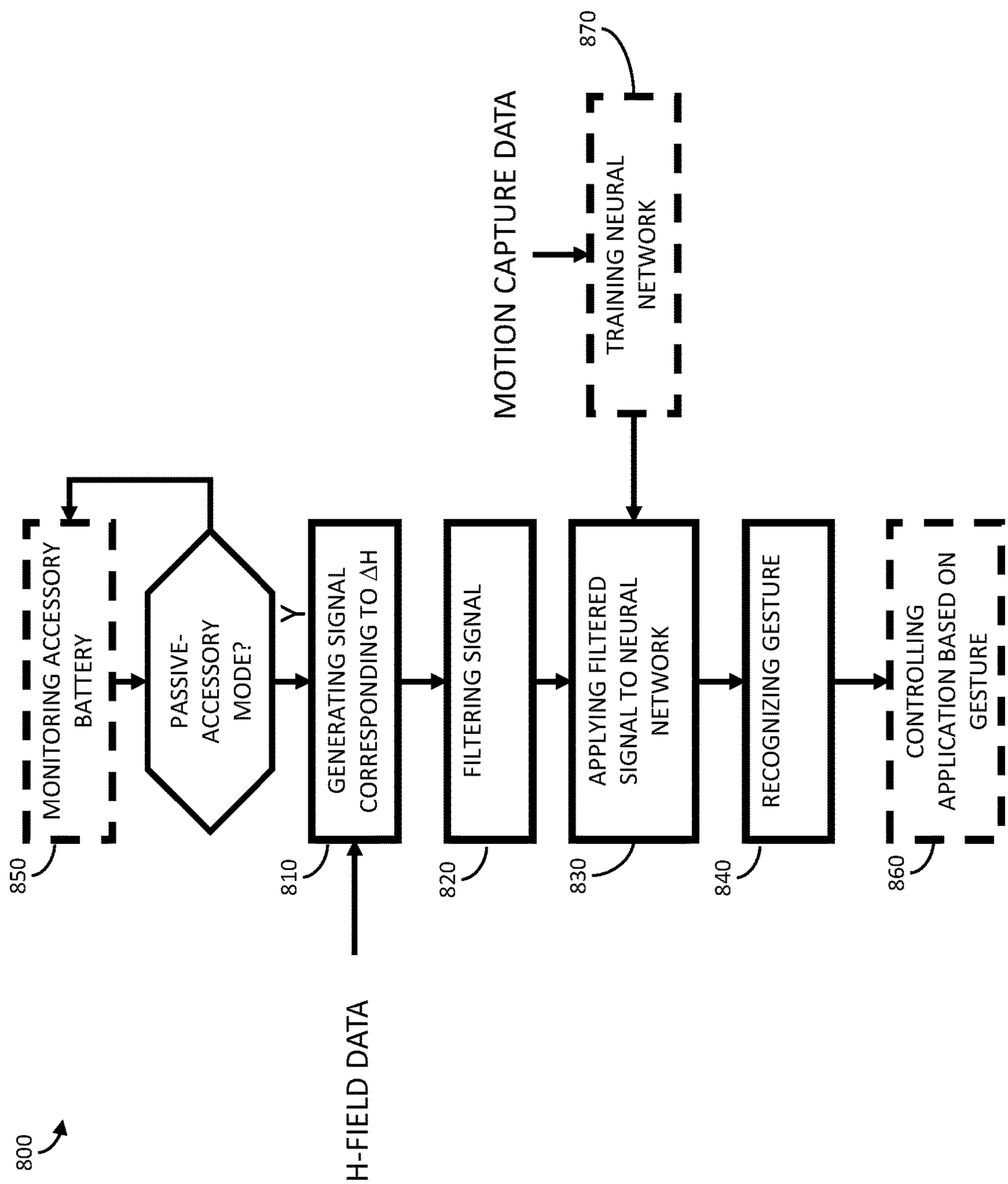
800
850
MONITORING ACCESSORY BATTERY
PASSIVE-ACCESSORY MODE?
Y
810
GENERATING SIGNAL CORRESPONDING TO ΔH
H-FIELD DATA
820
FILTERING SIGNAL
MOTION CAPTURE DATA
870
TRAINING NEURAL NETWORK
830
APPLYING FILTERED SIGNAL TO NEURAL NETWORK
840
RECOGNIZING GESTURE
860
CONTROLLING APPLICATION BASED ON GESTURE

FIG. 8

PASSIVE-ACCESSORY MEDIATED GESTURE INTERACTION WITH A HEAD-MOUNTED DEVICE

FIELD OF THE DISCLOSURE

[0001] The present disclosure relates to gesture interaction with a head-mounted device and more specifically to gesture interaction that includes a passive accessory device.

BACKGROUND

[0002] A user may wear multiple computing devices to provide a computing environment that can enable an augmented reality experience. Interaction between the computing devices can enhance the augmented reality experience.

SUMMARY

[0003] In some aspects, the techniques described herein relate to a head-mounted device including: a magnetometer configured to detect changes to a magnetic field caused by a movement of an accessory, in a passive state, in a volume including the head-mounted device; and a processor configured by instructions to: activate a passive-accessory mode for gesture input; receive a signal from the magnetometer corresponding to the changes to the magnetic field; apply the signal to a filter to generate a filtered signal; apply the filtered signal to a neural network to generate a movement signal corresponding to the movement of an accessory; and classify the movement signal as a gesture.

[0004] In some aspects, the techniques described herein relate to a head-mounted device, wherein the accessory is a wrist-worn computing device.

[0005] In some aspects, the techniques described herein relate to a head-mounted device, wherein the processor is configured to: receive a trigger signal to activate the passive-accessory mode for gesture input when a battery level of the wrist-worn computing device is below a threshold.

[0006] In some aspects, the techniques described herein relate to a head-mounted device, wherein the trigger signal is received from a mobile phone monitoring the battery level of the wrist-worn computing device.

[0007] In some aspects, the techniques described herein relate to a head-mounted device, wherein the processor is configured to: receive a trigger signal to activate the passive-accessory mode for gesture input when the wrist-worn computing device is turned OFF.

[0008] In some aspects, the techniques described herein relate to a head-mounted device, wherein the accessory is a passive item that includes a ferrous metal or magnet.

[0009] In some aspects, the techniques described herein relate to a head-mounted device, wherein the passive item is a key and/or a keyring.

[0010] In some aspects, the techniques described herein relate to a head-mounted device, wherein the magnetometer is located in a frame arm of the head-mounted device and the volume is a hemisphere bounded on one side by a plane defined by the frame arm and not including the head of a user wearing the head-mounted device.

[0011] In some aspects, the techniques described herein relate to a head-mounted device, wherein the processor is further configured to: control an application running on the head-mounted device based on the gesture.

[0012] In some aspects, the techniques described herein relate to a head-mounted device, wherein the application controls an augmented reality interaction based on the gesture.

[0013] In some aspects, the techniques described herein relate to a head-mounted device, wherein the application controls the head-mounted device to end a power-saving mode based on the gesture.

[0014] In some aspects, the techniques described herein relate to a head-mounted device, wherein the filter is an infinite-impulse-response high-pass filter configured to separate relatively fast changes to the magnetic field caused by movement of the accessory from relatively slow changes to the magnetic field caused by ambient fluctuations.

[0015] In some aspects, the techniques described herein relate to a head-mounted device, wherein the magnetometer is one magnetometer of a plurality of magnetometers included in an inertial measurement unit (IMU) of the head-mounted device.

[0016] In some aspects, the techniques described herein relate to a head-mounted device, wherein the processor is configured to: receive a plurality of signals from each of the plurality of magnetometers; apply each of the plurality of signals to one of a plurality of filters to generate a plurality of filtered signals; apply the plurality of filtered signals to a neural network configured to generate three movement signals, each of the three movement signals corresponding to a movement in a direction along an axis of a coordinate system of the head-mounted device; integrate the three movement signals over time to compute a trajectory of the accessory in the coordinate system of the head-mounted device; and classify the trajectory as the gesture.

[0017] In some aspects, the techniques described herein relate to a method for recognizing a gesture, the method including: generating a signal corresponding to changes to a magnetic field caused by a movement of an accessory, in a passive state, in a volume including a head-mounted device, the accessory being in a passive state; applying the signal to a filter to separate relatively fast changes to the magnetic field caused by the movement of the accessory from relatively slow changes to the magnetic field caused by ambient fluctuations, the filter outputting a filtered signal; applying the filtered signal to a neural network to generate a movement signal corresponding to the movement of the accessory; and recognizing the movement as a gesture.

[0018] In some aspects, the techniques described herein relate to a method for recognizing the gesture, wherein the accessory is a wrist-worn computing device that is in the passive state.

[0019] In some aspects, the techniques described herein relate to a method for recognizing the gesture, further including: determining that the accessory is in the passive state when the wrist-worn computing device has a battery level below a threshold.

[0020] In some aspects, the techniques described herein relate to a method for recognizing the gesture, further including: controlling an application running on the head-mounted device based on the gesture.

[0021] In some aspects, the techniques described herein relate to a method for recognizing the gesture, further including: training the neural network using example signals corresponding to movements captured using a motion capture system.

[0022] In some aspects, the techniques described herein relate to an augmented reality system including; a wrist-worn computing device in a passive state; and augmented-reality glasses that include: an inertial measurement unit positioned in a frame arm of the augmented-reality glasses and configured to output signals corresponding to changes in a magnetic field as the wrist-worn computing device is moved in a volume is a hemisphere bounded on one side by a plane defined by the frame arm and not including a head of a user wearing the augmented-reality glasses; and a processor configured by instructions to: activate a passive-accessory mode for gesture input based on the passive state of the wrist-worn computing device; receive a plurality of signals from the inertial measurement unit; apply each of the plurality of signals to one of a plurality of filters to generate a plurality of filtered signals; apply the plurality of filtered signals to a neural network configured to generate three movement signals, each of the three movement signals corresponding to a movement in a direction along an axis of a coordinate system of the augmented-reality glasses; integrate the three movement signals over time to compute a trajectory of the wrist-worn computing device in the coordinate system of the augmented-reality glasses; classify the trajectory as a gesture; and control an augmented reality application based on the gesture.

[0023] In some aspects, the techniques described herein relate to an augmented reality system, wherein the processor is further configured to: receive a battery level of the wrist-worn computing device; and determine that the wrist-worn computing device is in the passive state based on the battery level.

[0024] The foregoing illustrative summary, as well as other exemplary objectives and/or advantages of the disclosure, and the manner in which the same are accomplished, are further explained within the following detailed description and its accompanying drawings.

BRIEF DESCRIPTION OF THE DRAWINGS

[0025] FIG. **1** is a block diagram of a head-mounted device according to a possible implementation of the present disclosure.

[0026] FIG. **2** illustrates possible accessory devices for a head-mounted device according to an implementation of the present disclosure.

[0027] FIG. **3** is a block diagram illustrating an inertial measurement unit according to a possible implementation of the present disclosure.

[0028] FIGS. **4**A-**4**B illustrate a head-mounted device including sensors configured to sense an ambient magnetic field with and without distortions according to implementations of the present disclosure.

[0029] FIG. **5** illustrates a possible volume of detection for a head-mounted device according to a possible implementation of the present disclosure.

[0030] FIG. **6** is a block diagram of a process for gesture recognition using a head-mounted device according to a possible implementation of the present disclosure.

[0031] FIG. **7** is a block diagram illustrating a gesture interaction between a head-mounted device and an accessory device according to a possible implementation of the present disclosure.

[0032] FIG. **8** is a flowchart of a method for recognizing a gesture according to a possible implementation of the present disclosure.

[0033] The components in the drawings are not necessarily to scale relative to each other. Like reference numerals designate corresponding parts throughout the several views.

DETAILED DESCRIPTION

[0034] Accessory devices (e.g., mobile phone, smart watch, wrist band, smart ring, etc.) can be configured to detect gestures that can control applications running on a head-mounted device (e.g., smart glasses). For example, a graphical user interface (i.e., GUI) displayed on smart glasses may respond (e.g., zoom) when a gesture corresponding to a thumb-index finger pinch is detected by a wristband. In another example, display of a navigation application on a mobile phone display may switch to a smart-glasses display when a gesture corresponding to pocketing the phone is detected by the mobile phone. This accessory-mediated gesture interaction may be advantageous because it can reduce a complexity and power required by smart glasses when compared to direct gesture interaction (e.g., voice interaction, pressing a button, tapping the smart glasses, etc.). The accessory-mediated gesture interaction relies on the accessory device to actively monitor position, orientation, and movement to detect a gesture. This interaction may be disrupted when the accessory device becomes electrically inactive (i.e., is in a passive state).

[0035] An accessory device may cease its active monitoring when a battery level drops below a value either because it enters a low power mode or because it stops operating all together. In this condition, gesture interaction between a head-mounted device and the accessory device may be lost, which can be confusing to a user and can limit the functionality and/or convenience of the head-mounted device.

[0036] A need exists for a way to continue gesture interaction between the head-mounted device and the accessory device when the active monitoring of the accessory device is terminated due to a low power, or no power, condition. The present disclosure solves this technical problem without significantly adding complexity (e.g., new sensors) to the head-mounted device and without significantly reducing a battery life of the head-mounted device. The disclosed techniques may have the technical effect of expanding the versatility of the head-mounted device in its ability to recognize gestures and may be used in an extended reality (e.g., augmented reality, virtual reality, mixed reality) environment. Additionally, the disclosed techniques may expand the possible accessories that can interact with the head-mounted device to magnetic and/or ferrous objects that are electrically inactive (i.e., passive).

[0037] As used herein, the term "passive state" can include any condition in which an accessory is not electrically configured for gesture recognition. For example, an accessory device can be in a passive state when it is in a mode in which it does not sense movement, orientation, or position. This mode may be set by a user or may be automatically set by a device in a condition (e.g., low power, standby, etc.). In another example, a device can be in a passive state when it is electrically active but not configured for gesture recognition. For example, a device (e.g., flashlight) that is not configured for interconnectivity with other devices (i.e., a dumb device) may be electrically active but is effectively in a passive state because it does not communicate with the head-mounted device. In another example, a device can be in a passive state when it is electrically inactive (i.e., not operating, not ON, not powered). The

device may be electrically inactive as a result of being turned OFF (e.g., by a user) or because it has exhausted its power source (e.g., battery). In another example, a device can be in a passive state when it is not configured for electrical activity, such as a tool (e.g., screwdriver, wrench, etc.) or an object (e.g., key ring, permanent magnet, etc.). The term passive can be contrasted with active. In an active state an accessory may be configured to communicate with the head-mounted device and may be further configured to participate in a gesture recognition process.

[0038] FIG. **1** is a block diagram of a head-mounted device according to a possible implementation of the present disclosure. The head-mounted device **100** (i.e., head-worn device) may be implemented as smart glasses worn by a user. In a possible implementation, the smart glasses may provide a user with (and enable a user to interact with) an augmented reality (AR) environment. In these implementations, the smart glasses may be referred to as AR glasses. While AR glasses are not the only possible head-mounted device that can be implemented using the disclosed systems and methods (e.g., smart earbuds), the disclosure will discuss and refer to AR glasses as the head-mounted device throughout the disclosure.

[0039] The head-mounted device **100** may be worn on the head of a user (i.e., wearer) and can be configured to monitor a position and orientation (i.e., pose) of the head of the user. Additionally, the head-mounted device **100** may be configured to monitor the environment of the user. The head-mounted device may further be configured to determine a frame coordinate system based on the pose of the user and a world coordinate system based on the environment of the user. The relationship between the frame coordinate system and the world coordinate system may be used to visually anchor digital objects to real objects in the environment. The digital objects may be displayed to a user in a heads-up display. For these functions the head-mounted device **100** may include a variety of sensors and subsystems.

[0040] The head-mounted device **100** may include a front-facing camera **110**. The front facing camera may be configured to capture images of a front field-of-view **115**. The front field-of-view **115** may be aligned with a user's field of view so that the front facing camera captures images from a point-of-view of the user. The camera may be a color camera based on a charge coupled device (CCD) or complementary metal oxide semiconductor (CMOS) sensor.

[0041] The head-mounted device **100** may further include an eye-tracking camera **120** (or cameras). The eye tracking camera may be configured to capture images of an eye field-of-view **125**. The eye field of view **125** may be aligned with an eye of the user so that the eye-tracking camera **120** captures images of the user's eye. The eye images may be analyzed to determine a gaze direction of a user, which may be included in analysis to refine the frame coordinate system to better align with a direction in which the user is looking. When the head-mounted device **100** is implemented as smart glasses, the eye-tracking camera **120** may be integrated with a portion of a frame of the glasses surrounding a lens to directly image the eye. In a possible implementation the head-mounted device **100** includes an eye-tracking camera **120** for each eye and a gaze direction may be based on the images of both eyes.

[0042] The head-mounted device **100** may further include location sensors **130**. The location sensors may be configured to determine a position of the head-mounted device (i.e., the user) on the planet, in a building (or other designated area), or relative to another device. For this, the head-mounted device **100** may communicate with other devices over a wireless communication link **135**. For example, a user's position may be determined within a building based on communication between the head-mounted device **100** and a wireless router **131** or indoor positioning unit. In another example, a user's position may be determined on the planet based on a global positioning system (GPS) link between the head-mounted device **100** and a GPS satellite **132** (e.g., a plurality of GPS satellites). In another example, a user's position may be determined relative to a device (e.g., mobile phone **133**) based on ultrawide band (UWB) communication or Bluetooth communication between the mobile phone **133** and the location sensors **130**.

[0043] The head-mounted device **100** may further include a display **140**. For example, the display **140** may be a heads-up display (i.e., HUD) displayed on a portion (e.g., the entire portion) of a lens of AR glasses. In a possible implementation, a projector positioned in a frame arm of the glasses may project light to a surface of a lens, where it is reflected to an eye of the user. In another possible implementation, the head-mounted device **100** may include a display for each eye.

[0044] The head-mounted device **100** may further include a battery **150**. The battery may be configured to provide energy to the subsystems, modules, and devices of the head-mounted device **100** to enable their operation. The battery may be rechargeable and have an operating life (e.g., lifetime) between charges. The head-mounted device **100** may include circuitry or software to monitor a battery level of the battery **150**.

[0045] The head-mounted device **100** may further include a communication interface **160**. The communication interface may be configured to communicate information digitally over a wireless communication link (e.g., WiFi, Bluetooth, etc.). For example, the head-mounted device **100** may be communicatively coupled to a network **161** (i.e., the cloud) or a device (e.g., the mobile phone **133**) over a wireless communication link **135**. The wireless communication link may allow operations of a computer-implemented method to be divided between devices. Additionally, the communication link may allow a device to communicate a condition, such as a battery level or a power mode (e.g., low-power mode). In this regard, devices communicatively coupled to the head-mounted device **100** may be considered as accessories to the head-mounted device **100** and therefore each may be referred to as an accessory device. An accessory device (e.g., mobile phone **133**) may be configured to detect a gesture and then communicate this detection to the head-mounted device **100** to trigger a response from the head-mounted device **100**.

[0046] FIG. **2** illustrates a head-mounted device **100** and possible accessory devices according to an implementation of the present disclosure. The accessory devices shown in FIG. **2** are examples and do not represent all possible accessory devices. For example, a fob, such as a car door fob, home door fob, or the like may be configured as an accessory device. As shown, the head-mounted device **100**, implemented as smart glasses, can be communicatively coupled to one or more accessory devices simultaneously. A user may interact with the smart glasses using one or more of the accessory devices. For example, one or more of the

accessory devices may be used to detect gestures of the user in an accessory-mediated gesture interaction. A gesture may include a movement of hand(s), arm(s), and/or finger(s) of a user.

[0047] A first possible accessory device is a smart watch **210**. The smart watch **210** may be configured to be worn on a wrist of a user. The smart watch **210** may include sensors configured to detect a position, orientation, or movement of the wrist of the user as a gesture, or part of a gesture.

[0048] A second possible accessory device is a smart ring **220**. The smart ring **220** may be configured to be worn on a finger of a user and may include sensors configured to detect a position, orientation, or movement of the finger as a gesture, or part of a gesture. In some implementations, the smart ring **220** can include an interface switch (e.g., button) that can be pressed (e.g., by the thumb) as part of a gesture.

[0049] A third possible accessory device is a smart armband **230**. The smart armband may be worn on a wrist portion of the arm (e.g., bracelet) or on the forearm (e.g., cuff). In a possible implementation, the smart armband is implemented as a fitness-tracker. The fitness tracker can include motion sensors configured to detect a position, orientation, or movement of an upper limb (e.g., wrist, forearm) of the user. The smart armband may further include at least one sensor configured to sense muscle activity of the user's upper limb. Movement and/or activity data from one or more of these sensors may be detected as a gesture, or part of a gesture.

[0050] A fourth possible accessory device is a mobile phone **240**. The mobile phone may be held in a hand of the user or otherwise carried by the user (e.g., in a pocket of the user). The mobile phone may include sensors configured to detect a position, orientation, or movement of the phone as a gesture, or part of a gesture. For example, a shake of the phone may be interpreted as a gesture.

[0051] Returning to FIG. **1**, the head-mounted device **100** may further include a memory **170**. The memory may be a non-transitory computer readable medium (i.e., CRM). The memory may be configured to store a computer program product. The computer program can instruct a processor to perform computer implemented methods (i.e., computer programs). These computer programs (also known as modules, programs, software, software applications or code) include machine instructions for a programmable processor and can be implemented in a high-level procedural and/or object-oriented programming language, and/or in assembly/machine language. As used herein, the terms "machine-readable medium" or "computer-readable medium" refers to any computer program product, apparatus and/or device (e.g., magnetic discs, optical disks, memory, Programmable Logic Devices (PLDs)) used to provide machine instructions and/or data to a programmable processor, including a machine-readable medium that receives machine instructions as a machine-readable signal. The term "machine-readable signal" refers to any signal used to provide machine instructions and/or data to a programmable processor.

[0052] The head-mounted device **100** may further include a processor **180**. The processor may be configured to carry out instructions (e.g., software, applications, etc.) to configure the functions of the head-mounted device **100**. In a possible implementation the processor may include multiple processor cores. In a possible implementation, the head-mounted computing device may include multiple processors. In a possible implementation, processing for the head-mounted computing device may be carried out over a network **161**.

[0053] The head-mounted device **100** may further include an inertial measurement unit (IMU **300**). The IMU may include a plurality of sensor modules to determine its position, orientation, and/or movement. The IMU may have a frame coordinate system (X,Y,Z) and each sensor module may output values relative to each direction of the frame coordinate system.

[0054] FIG. **3** is a block diagram illustrating an inertial measurement unit according to a possible implementation of the present disclosure. The IMU **300** can include a gyroscope module **310** having one or more gyroscopes that are each aligned with and configured to determine a rotation (e.g., yaw **311**, pitch **312**, roll **313**) about an axis of the frame coordinate system (X, Y, Z).

[0055] The IMU **300** can further include an accelerometer module **320** having one or more accelerometers configured to determine an orientation of the frame coordinate system relative to a down direction **321** (G) aligned with gravity.

[0056] The IMU **300** can further include a magnetometer module **330**. In a possible implementation, the magnetometer module includes (i) a first magnetometer configured to measure a first magnetic field strength (i.e., H_x) in a first direction (i.e., X) of the frame coordinate system, (ii) a second magnetometer configured to measure a second magnetic field strength (i.e., H_y) in a second direction (i.e., Y) of the frame coordinate system, and (iii) a third magnetometer configured to measure a third magnetic field strength (i.e., H_z) in a third direction (i.e., Z) of the frame coordinate system.

[0057] The magnetometer module **330** is configured to sense a magnetic field in a user's environment (i.e., ambient magnetic field). The ambient magnetic field may include the Earth's magnetic field (i.e., magnetic north **331**) plus any stray magnetic fields generated by objects (e.g., magnets, motors, etc.) in the environment. The shape (i.e., direction, strength) of the ambient magnetic field may be distorted by objects. For example, objects that can respond to a magnetic field (e.g., diamagnetic materials, paramagnetic materials) or that are magnetic (e.g., ferromagnetic materials) can change the magnetic field in an area around the object. These materials will be referred to collectively as magnetic materials. An object or an accessory that includes a magnetic material may be referred to as a magnetic object or a magnetic accessory.

[0058] In some cases, a magnetic object/accessory moving near the magnetometer can cause a distortion to the ambient magnetic field that can be detected by the magnetometer module **330** of a head-mounted device **100**.

[0059] FIG. **4**A illustrates a head-mounted device **100** that includes a magnetometer module **330** configured to sense an ambient magnetic field **401**. The ambient magnetic field **401** is illustrated as a plurality of flux lines that correspond to the strength and direction of the magnetic field in the ambient environment. An IMU **300** including a magnetometer module **330** is located in a frame arm of the head-mounted device **100**. The magnetometer module **330** is configured to sense the magnetic field **401** in a portion of the user's environment around the frame arm of the head-mounted device **100** (i.e., adjacent to the magnetometer module **330**).

[0060] FIG. **4**B illustrates a distortion to the ambient magnetic field caused by a magnetic object **410**. As shown,

flux lines of the ambient magnetic field are warped by the magnetic object **410** to produce a distortion that affects the strength and direction of the magnetic field. In other words, the magnetic field **401** may be changed by (i.e., distorted by) the magnetic object **410** so that a field strength may be different (e.g., greater) around the magnetic object **410** than otherwise in the ambient magnetic field. Further, a direction of the ambient field may be different around the magnetic object **410** than otherwise in the ambient magnetic field. Because the magnetometer module **330** is configured to sense magnetic field strength and direction, the distortion caused by the magnetic object **410** can be detected when the distortion is within a detectable range of the magnetometer module **330**. A detectable range of the magnetometer module **330** may be based on (i) a sensitivity of the magnetometers in the magnetometer module **330**, (ii) a size of the distortion, and (iii) the relative positions of the magnetic object **410** and the magnetometer module **330**.

[0061] FIG. **5** illustrates a possible volume of detection (i.e., a sensitivity pattern) for a magnetometer module **330** located in a frame arm of a head-mounted device **100**. The volume **510** can be a hemisphere defined by a radius (i.e., R), which can be the detectable range of the magnetometer. The volume is presented to help understand the interactions between magnetic objects/accessories. In practice, variations may exist. For example, a response (i.e., range) may not be defined by a single radius and the boundaries may be less distinct. Accordingly, a volume of detection is not limited to that shown and may be different in different ambient environments.

[0062] The volume **510** can be bounded on a side (i.e., a flat side) by a plane defined by the frame arm. In other words, the volume **510** can be a hemisphere having an origin located at the magnetometer and having a radius directed towards the environment (i.e., away from the head **520** of the user) so that the volume **510** does not include the head of the user wearing the head-mounted device **100**.

[0063] When a magnetic object **530**, which is shown in FIG. **5** as a steel wrench but which could be any magnetic object, is moved into the volume **510**, it may be detected by the magnetometer module **330** of the head-mounted device **100**. Additionally, the movement of the magnetic object **530** can be tracked over time when the magnetometer module **330** is configured to track the magnetic field in multiple dimensions (e.g., three-dimensions).

[0064] One advantage of the present approach is that any object that causes a change to the magnetic field sensed by the IMU can be used for gesturing. While passive devices have been discussed, active devices may be used as well. For example, an active device may be a mobile phone that is powered (but not actively monitoring gestures) or an electric motor that generates stray magnetic fields.

[0065] The magnetic object **530** may be moved by a hand **540** of the user in a particular way to perform a gesture. For example, a gesture may include positioning the magnetic object **530** inside the volume **510** so that it can be detected and then moving the magnetic object **530** to perform a movement corresponding to the gesture. The user may know the movement corresponding to the gesture (e.g., by training) or may be informed how to perform the gesture as part of an interaction. Various movements may be recognized as various gestures.

[0066] FIG. **6** is a block diagram of a framework for passive-accessory mediated gesture recognition with a head-mounted device according to a possible implementation of the present disclosure. The framework **600** may include receiving a trigger signal **601** to enter a passive-accessory mode. In the passive-accessory mode, the head-mounted device may be configured to monitor the magnetometer of the IMU for possible gestures. In other words, the trigger signal **601** may (i) activate a passive-accessory mediated gesture recognition algorithm **610** to run on the head-mounted device and (ii) couple signals from the magnetometer **605** of the head-mounted device to the passive-accessory mediated gesture recognition algorithm **610** running on the head-mounted device. The passive-accessory mediated gesture recognition algorithm **610** is configured to sense changes (e.g., distortions) to the magnetic fields (Hx, Hy, Hz) caused by an accessory device (e.g., smartphone, bands, metal rings, keychains, etc.) moving in a volume on a world-facing side of the magnetometer **605** in the head-mounted device.

[0067] The trigger signal may be initiated in a variety of ways. For example, a user may initiate the passive-accessory mode (e.g., through a gesture). As another example, the passive accessory mode may be initiated automatically. For example, an accessory device (e.g., smart watch) may interact with the head-mounted device to communicate its power status (e.g., power saving mode). In a possible implementation, the head-mounted device monitors a battery level (i.e., power level) of the accessory device and triggers the passive accessory mode when the battery level satisfies a criterion (e.g., drops below a threshold). The head-mounted device may communicate when it enters the passive-accessory mode to a user. This may help the user interact with the device, especially if the user is required to change gesturing in the passive-accessory mode.

[0068] The passive-accessory mediated gesture recognition algorithm **610** includes a filtering module **620**. The filtering module is configured to receive one or more channels from the magnetometer. Each channel may include a time varying signal corresponding to an axis of the magnetometer. The filtering module may include a filter for each channel. The channel filters may be identical or different and may be configured to separate magnetic fluctuations caused by human movement from fluctuations caused by changes to the ambient environment. The separation may be based on the expected speed (i.e., frequency) of each type of fluctuation. For example, fluctuations due to hand, wrist, or finger movements may be faster than fluctuations due to the change in magnetic north due to a head movement. Accordingly, the channel filters of the filtering module **620** may be high-pass filters configured to attenuate (e.g., suppress) fluctuations below a cutoff frequency. The cutoff frequency may be set based on a frequency analysis of possible ambient fluctuations. For example, the cutoff frequency may be set so that 95% of ambient fluctuations are removed from the magnetic field signals. In a possible implementation the signals from the magnetometer are time-based samples of the magnetic field in three dimensions and the filter for each dimension is an infinite-impulse response (IIR) high-pass filter.

[0069] The filtered signals may then be applied to a neural network **630**. The neural network **630** can be trained prior to operation (i.e., offline) with training data **631**. The training data **631** may be obtained from gestures recorded using a motion capture system. For example, the motion capture system can record hand/head poses of a plurality of participants (e.g., >100) as they form gestures.

[0070] The neural network **630** may be implemented as a convolutional neural network with long short-term memory (CNN-LSTM). In a possible implementation, the filtered signals are concatenated and passed to a convolutional layer that is appended with an LSTM model for time-series correlation modeling. The output of the neural network **630** may include nodes (e.g., three nodes) that each describes a change in movement along an axis of the magnetometer. For example, the neural network **630** can output a change in movement along the X-axis (i.e., Δx), a change in movement along the Y-axis (i.e., Δy), and a change in movement along the Z-axis (i.e., Δz). The change in movement (i.e., delta movement) does not need to include absolute positions only how much has changed. Accordingly, the output of the neural network **630** may be a trajectory.

[0071] A movement of a passive accessory may be characterized by a trajectory, which is the delta movement over a period of time. Accordingly, the passive-accessory mediated gesture recognition algorithm **610** further includes an integrator module (i.e., integrator **640**) configured to integrate the delta movements over time to compute a trajectory (e.g., in relative coordinates).

[0072] The passive-accessory mediated gesture recognition algorithm **610** further includes gesture logic **650** configured to map a trajectory with a gesture. In other words, the gesture logic may be implemented as a model (e.g., library) of possible gestures/trajectories that is configured to output a particular gesture when a measured trajectory maps to a stored gesture/trajectory with a confidence that satisfies a criterion (e.g., is above a threshold).

[0073] FIG. **7** is a block diagram illustrating a gesture interaction between a head-mounted device and an accessory device according to a possible implementation of the present disclosure. As shown, the head-mounted device is implemented as AR glasses **710**, while the accessory device is implemented as a wrist-worn computing device **720** (e.g., smart watch).

[0074] The wrist-worn computing device **720** may trigger the AR glasses **710** to monitor a magnetic field **725** for gestures when the wrist-worn computing device is in (e.g., enters) a passive state. The AR glasses may be configured to monitor the magnetic field **725** in a world-facing direction **715** using an IMU **730** positioned in a frame arm **717** of the AR glasses **710**. The world-facing direction **715** may be normal to a plane defined by the frame arm **717** of the AR glasses **710**.

[0075] A magnetometer in the IMU **730** may define a frame coordinate system **718** in which an X-dimension is aligned with the frame arm **717** of the AR glasses **710** and a Z-dimension (Z) is orthogonal to the frame arm **717** of the AR glasses **710**. The wrist-worn computing device **720** in the passive state may operate as a magnetic object that can distort the magnetic field **725** when moved in a change direction along the X-dimension, Y-dimension, and/or Z-dimension. A processor **740** may receive the sensed fields and may be configured to perform the steps of the passive-accessory mediated gesture recognition algorithm **610**, as shown in FIG. **6**. A detected gesture may configure the processor to control an AR application. For example, a user interface on a display **750** of the AR glasses **710** may be updated and/or changed based on the gesture.

[0076] In a possible implementation, when the change movement (Δx) in the X-dimension is positive 10 cm while the change movements in the other directions (Δy, Δz) are roughly constant, then a "left swipe" gesture may be determined and can trigger the head-mounted device to respond (e.g., in a user interface). Similarly, when the change movement (Δx) in the X-dimension is negative 10 cm while the change movements in the other directions (Δy, Δz) are roughly constant, then a "right swipe" gesture may be determined. In other words, the direction of a movement of the wrist wearing the passive accessory may be detected.

[0077] In another possible implementation, when the change movement (Δz) in the Z-dimension is less than 5 cm, then a "wake-up" gesture may be determined, and a display of the head-mounted device may be activated. The "wake-up" gesture can anticipate a user's hand coming into the front field of view **115** and proactively wake-up the user interface for augmented reality interaction. The Z-dimension (i.e., Z-axis) may be aligned with a direction that is perpendicular to the frames.

[0078] FIG. **8** is a flowchart of a method for recognizing a gesture according to a possible implementation of the present disclosure. The method **800** includes generating **810** at least one signal corresponding to changes to a magnetic field (i.e., AH). The changes to the magnetic field can be caused by a movement of an accessory (e.g., an accessory in a passive state) in a volume including a head-mounted device. The method **800** further includes filtering **820** the signal (or signals) to separate relatively fast changes to the magnetic field (i.e., high-frequency signals) caused by the movement of the accessory from relatively slow changes to the magnetic field (i.e., low-frequency signals) caused by ambient fluctuations to generate a filtered signal. For example, the low-frequency components can be attenuated (or eliminated) from the filtered signal. The method **800** further includes applying **830** the filtered signal to a neural network to generate a movement signal corresponding to the movement of the accessory. The movement may be relative to a frame coordinate system of the head-mounted device. The method further includes recognizing **840** the movement signal as a gesture. In a possible implementation, the method **800** further includes controlling **860** an application running on the head-mounted device based on the gesture.

[0079] In a possible implementation, the method **800** can include triggering a passive accessory mode for gesture recognition based on a battery level of an accessory. For example, the method can include monitoring **850** a battery of an accessory device (i.e., a power level of the accessory device) and triggering the passive accessory mode, in which H-field data is used to recognized gestures, when a battery level drops below a level (e.g., is zero).

[0080] In a possible implementation, the method **800** can include training **870** the neural network. The neural network may be trained before use. The training may include gathering motion capture data corresponding to movements of participants performing gestures captured by a motion capture system.

[0081] In the specification and/or figures, typical embodiments have been disclosed. The present disclosure is not limited to such exemplary embodiments. The use of the term "and/or" includes any and all combinations of one or more of the associated listed items. The figures are schematic representations and so are not necessarily drawn to scale. Unless otherwise noted, specific terms have been used in a generic and descriptive sense and not for purposes of limitation.

[0082] Unless defined otherwise, all technical and scientific terms used herein have the same meaning as commonly understood by one of ordinary skill in the art. Methods and materials similar or equivalent to those described herein can be used in the practice or testing of the present disclosure. As used in the specification, and in the appended claims, the singular forms "a," "an," "the" include plural referents unless the context clearly dictates otherwise. The term "comprising" and variations thereof as used herein is used synonymously with the term "including" and variations thereof and are open, non-limiting terms. The terms "optional" or "optionally" used herein mean that the subsequently described feature, event or circumstance may or may not occur, and that the description includes instances where said feature, event or circumstance occurs and instances where it does not. Ranges may be expressed herein as from "about" one particular value, and/or to "about" another particular value. When such a range is expressed, an aspect includes from the one particular value and/or to the other particular value. Similarly, when values are expressed as approximations, by use of the antecedent "about," it will be understood that the particular value forms another aspect. It will be further understood that the endpoints of each of the ranges are significant both in relation to the other endpoint, and independently of the other endpoint.

[0083] Some implementations may be implemented using various semiconductor processing and/or packaging techniques. Some implementations may be implemented using various types of semiconductor processing techniques associated with semiconductor substrates including, but not limited to, for example, Silicon (Si), Gallium Arsenide (GaAs), Gallium Nitride (GaN), Silicon Carbide (SiC) and/or so forth.

[0084] While certain features of the described implementations have been illustrated as described herein, many modifications, substitutions, changes and equivalents will now occur to those skilled in the art. It is, therefore, to be understood that the appended claims are intended to cover all such modifications and changes as fall within the scope of the implementations. It should be understood that they have been presented by way of example only, not limitation, and various changes in form and details may be made. Any portion of the apparatus and/or methods described herein may be combined in any combination, except mutually exclusive combinations. The implementations described herein can include various combinations and/or sub-combinations of the functions, components and/or features of the different implementations described.

[0085] It will be understood that, in the foregoing description, when an element is referred to as being on, connected to, electrically connected to, coupled to, or electrically coupled to another element, it may be directly on, connected or coupled to the other element, or one or more intervening elements may be present. In contrast, when an element is referred to as being directly on, directly connected to or directly coupled to another element, there are no intervening elements present. Although the terms directly on, directly connected to, or directly coupled to may not be used throughout the detailed description, elements that are shown as being directly on, directly connected or directly coupled can be referred to as such. The claims of the application, if any, may be amended to recite exemplary relationships described in the specification or shown in the figures.

[0086] As used in this specification, a singular form may, unless definitely indicating a particular case in terms of the context, include a plural form. Spatially relative terms (e.g., over, above, upper, under, beneath, below, lower, and so forth) are intended to encompass different orientations of the device in use or operation in addition to the orientation depicted in the figures. In some implementations, the relative terms above and below can, respectively, include vertically above and vertically below. In some implementations, the term adjacent can include laterally adjacent to or horizontally adjacent to.

1. A head-mounted device comprising:

a magnetometer configured to detect changes to a magnetic field in a volume including the head-mounted device; and

a processor configured by instructions to:

receive a trigger signal from a wrist-worn computing device, the trigger signal indicating that a battery level of the wrist-worn computing device is below a threshold;

activate a passive-accessory mode for gesture input in response to the trigger signal;

receive a signal from the magnetometer corresponding to the changes to the magnetic field caused by movement of an accessory in the volume including the head-mounted device;

apply the signal to a filter to generate a filtered signal;

apply the filtered signal to a neural network to generate a movement signal corresponding to the movement of the accessory; and

classify the movement signal as a gesture.

2. The head-mounted device according to claim **1**, wherein the accessory is the wrist-worn computing device.

3. (canceled)

4. The head-mounted device according to claim **2**, wherein the trigger signal is received from a mobile phone monitoring the battery level of the wrist-worn computing device.

5. The head-mounted device according to claim **2**, wherein the processor is configured to:

receive the trigger signal to activate the passive-accessory mode for gesture input when the wrist-worn computing device is turned OFF.

6. The head-mounted device according to claim **1**, wherein the accessory is a passive item that includes a ferrous metal or magnet.

7. The head-mounted device according to claim **6**, wherein the passive item is a key and/or a keyring.

8. The head-mounted device according to claim **1**, wherein the magnetometer is located in a frame arm of the head-mounted device and the volume is a hemisphere bounded on one side by a plane defined by the frame arm and not including the head of a user wearing the head-mounted device.

9. The head-mounted device according to claim **1**, wherein the processor is further configured to:

control an application running on the head-mounted device based on the gesture.

10. The head-mounted device according to claim **9**, wherein the application controls an augmented reality interaction based on the gesture.

11. The head-mounted device according to claim **9**, wherein the application controls the head-mounted device to end a power-saving mode based on the gesture.

12. The head-mounted device according to claim **1**, wherein the filter is an infinite-impulse-response high-pass filter configured to separate relatively fast changes to the magnetic field caused by movement of the accessory from relatively slow changes to the magnetic field caused by ambient fluctuations.

13. The head-mounted device according to claim **1**, wherein the magnetometer is one magnetometer of a plurality of magnetometers included in an inertial measurement unit (IMU) of the head-mounted device.

14. The head-mounted device according to claim **13**, wherein the processor is configured to:

receive a plurality of signals from each of the plurality of magnetometers;

apply each of the plurality of signals to one of a plurality of filters to generate a plurality of filtered signals;

apply the plurality of filtered signals to the neural network configured to generate three movement signals, each of the three movement signals corresponding to a movement in a direction along an axis of a coordinate system of the head-mounted device;

integrate the three movement signals over time to compute a trajectory of the accessory in the coordinate system of the head-mounted device; and

classify the trajectory as the gesture.

15. A method for recognizing a gesture, the method comprising:

receiving a trigger signal at a head-mounted device from a wrist-worn computing device, the trigger signal indicating that a battery level of the wrist-worn computing device is below a threshold;

activating a passive-accessory mode for gesture input in response to the trigger signal;

generating a signal corresponding to changes to a magnetic field caused by a movement of an accessory in a volume including the head-mounted device;

filtering the signal to separate relatively fast changes to the magnetic field caused by the movement of the accessory from relatively slow changes to the magnetic field caused by ambient fluctuations to generate a filtered signal;

applying the filtered signal to a neural network to generate a movement signal corresponding to the movement of the accessory; and

recognizing the movement signal as the gesture.

16. The method for recognizing the gesture according to claim **15**, wherein the accessory is the wrist-worn computing device.

17. (canceled)

18. The method for recognizing the gesture according to claim **15**, further comprising:

controlling an application running on the head-mounted device based on the gesture.

19. The method for recognizing the gesture according to claim **15**, further comprising:

training the neural network using example signals corresponding to movements captured using a motion capture system.

20. An augmented reality system comprising;

a wrist-worn computing device in a passive state; and

augmented-reality glasses that include:

an inertial measurement unit positioned in a frame arm of the augmented-reality glasses and configured to output signals corresponding to changes in a magnetic field as the wrist-worn computing device is moved in a volume is a hemisphere bounded on one side by a plane defined by the frame arm and not including a head of a user wearing the augmented-reality glasses; and

a processor configured by instructions to:

receive a battery level of the wrist-worn computing device;

determine that the wrist-worn computing device is in the passive state based on the battery level;

activate a passive-accessory mode for gesture input based on the passive state of the wrist-worn computing device;

receive a plurality of signals from the inertial measurement unit;

apply each of the plurality of signals to one of a plurality of filters to generate a plurality of filtered signals;

apply the plurality of filtered signals to a neural network configured to generate three movement signals, each of the three movement signals corresponding to a movement in a direction along an axis of a coordinate system of the augmented-reality glasses;

integrate the three movement signals over time to compute a trajectory of the wrist-worn computing device in the coordinate system of the augmented-reality glasses;

classify the trajectory as a gesture; and

control an augmented reality application based on the gesture.

21. (canceled)

* * * * *