US 20230237799A1

(19) United States
(12) Patent Application Publication
MUGURA et al.
(10) Pub. No.: US 2023/0237799 A1
(43) Pub. Date: Jul. 27, 2023

(54) **INFORMATION PROCESSING APPARATUS, INFORMATION PROCESSING METHOD, PROGRAM, AND MOVING BODY**

(71) Applicant: **Sony Group Corporation**, Tokyo (JP)

(72) Inventors: **Kazuto MUGURA**, Tokyo (JP); **Ayaka SATOH**, Kanagawa (JP); **Satoshi AKAGAWA**, Tokyo (JP); **Shoji WATANABE**, Kanagawa (JP)

(73) Assignee: **Sony Group Corporation**, Tokyo (JP)

(21) Appl. No.: **18/189,273**

(22) Filed: **Mar. 24, 2023**

Related U.S. Application Data

(63) Continuation of application No. 16/640,727, filed on Feb. 21, 2020, now Pat. No. 11,645,840, filed as application No. PCT/JP2018/030489 on Aug. 17, 2018.

(30) **Foreign Application Priority Data**

Aug. 31, 2017 (JP) 2017-166871
Mar. 30, 2018 (JP) 2018-069055

Publication Classification

(51) **Int. Cl.**

G06V 20/20	(2006.01)
G01C 21/20	(2006.01)
G06V 20/56	(2006.01)
G06V 20/59	(2006.01)
H04N 23/67	(2006.01)

(52) **U.S. Cl.**
CPC ***G06V 20/20*** (2022.01); ***G01C 21/20*** (2013.01); ***G06V 20/56*** (2022.01); ***G06V 20/59*** (2022.01); ***H04N 23/67*** (2023.01)

(57) **ABSTRACT**

The present technique relates to an information processing apparatus, an information processing method, a program, and a moving body that can appropriately display content on top of a scene viewed by a user.

An aspect of the present technique provides an information processing apparatus that sets a frame as a superimposition location of content in a region corresponding to a surface of an object on the basis of a movement state of a user and generates visual information for displaying the content in the region corresponding to the set frame. The present technique can be applied to an apparatus that performs AR display of content.

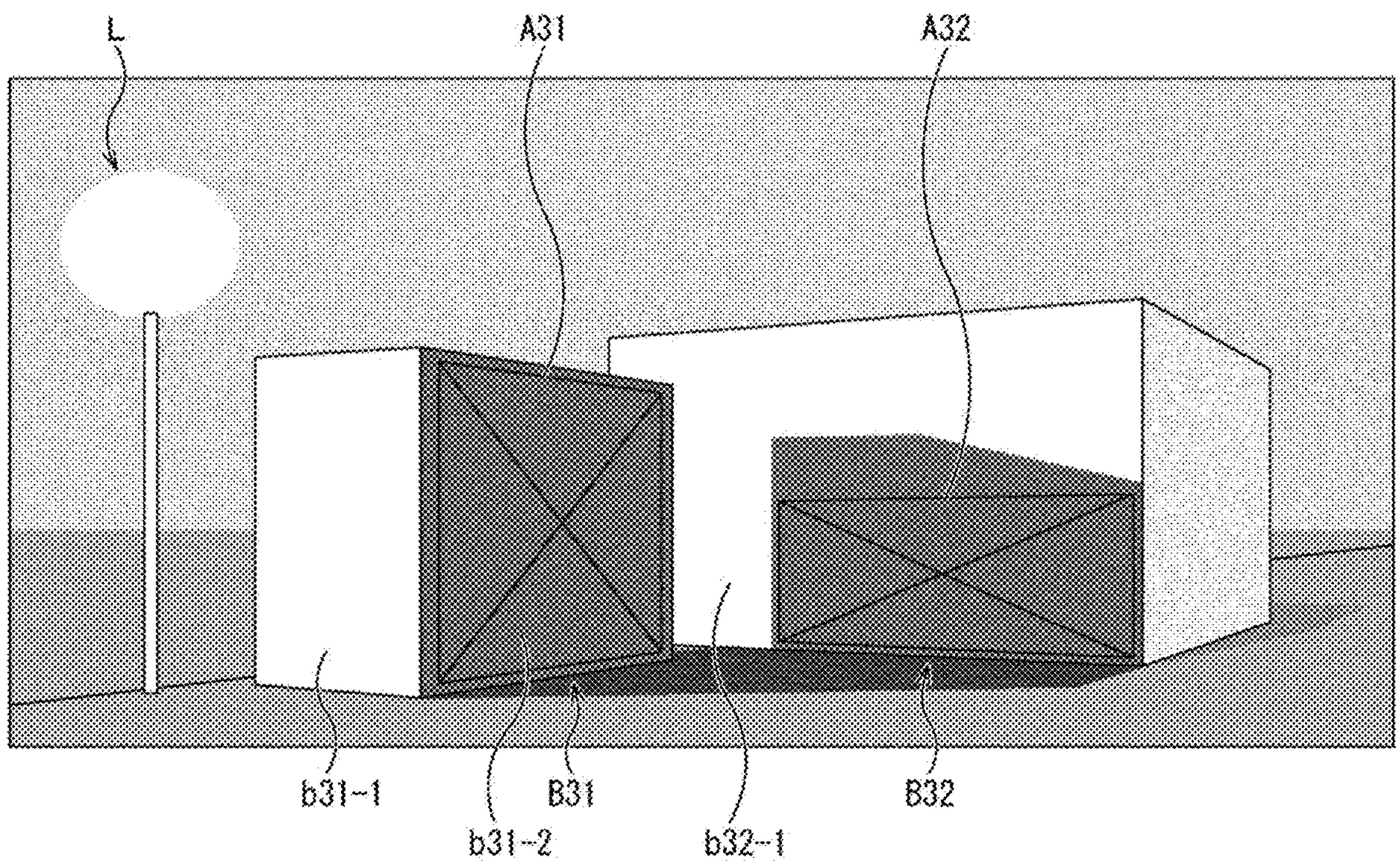

FIG.1

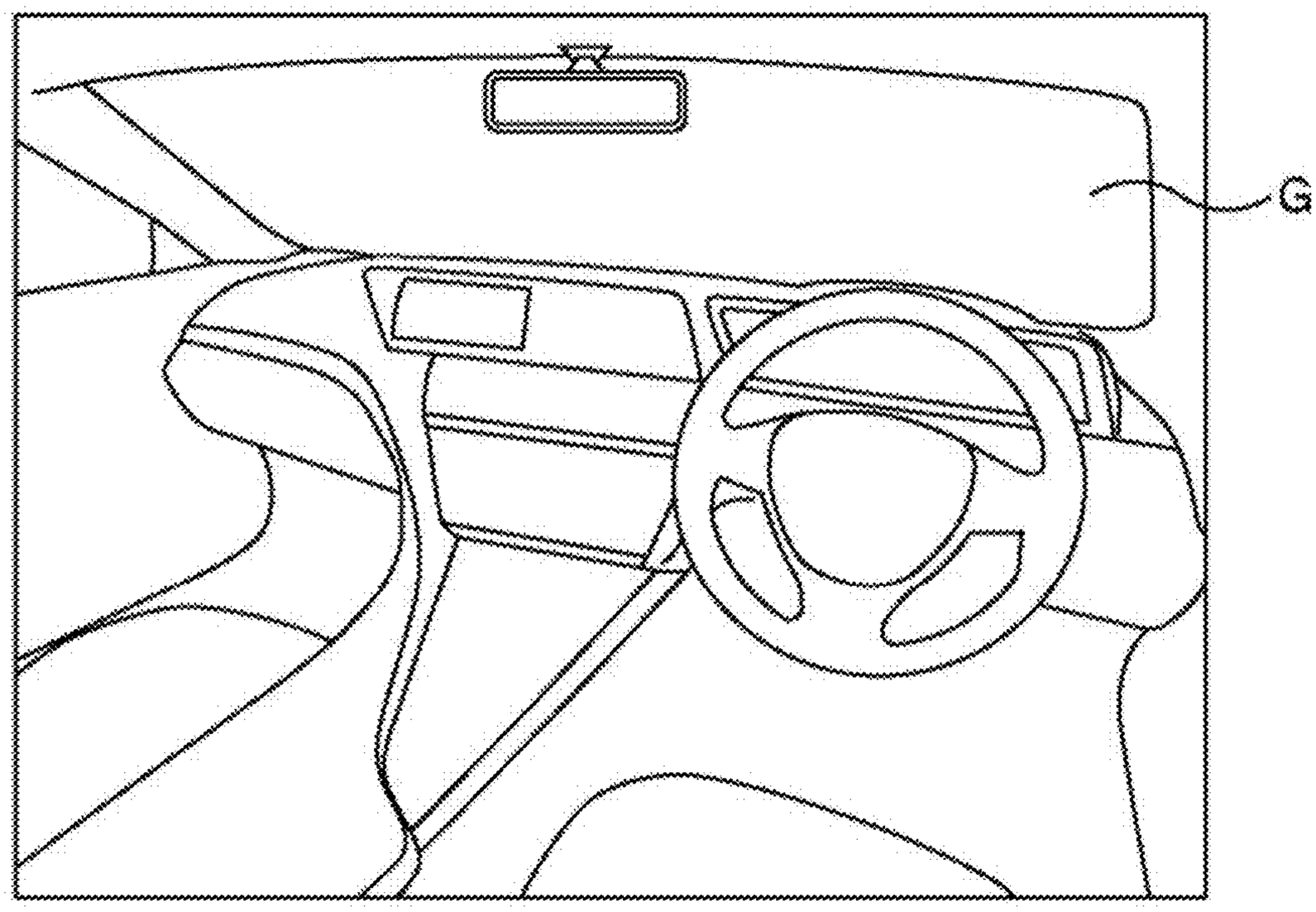

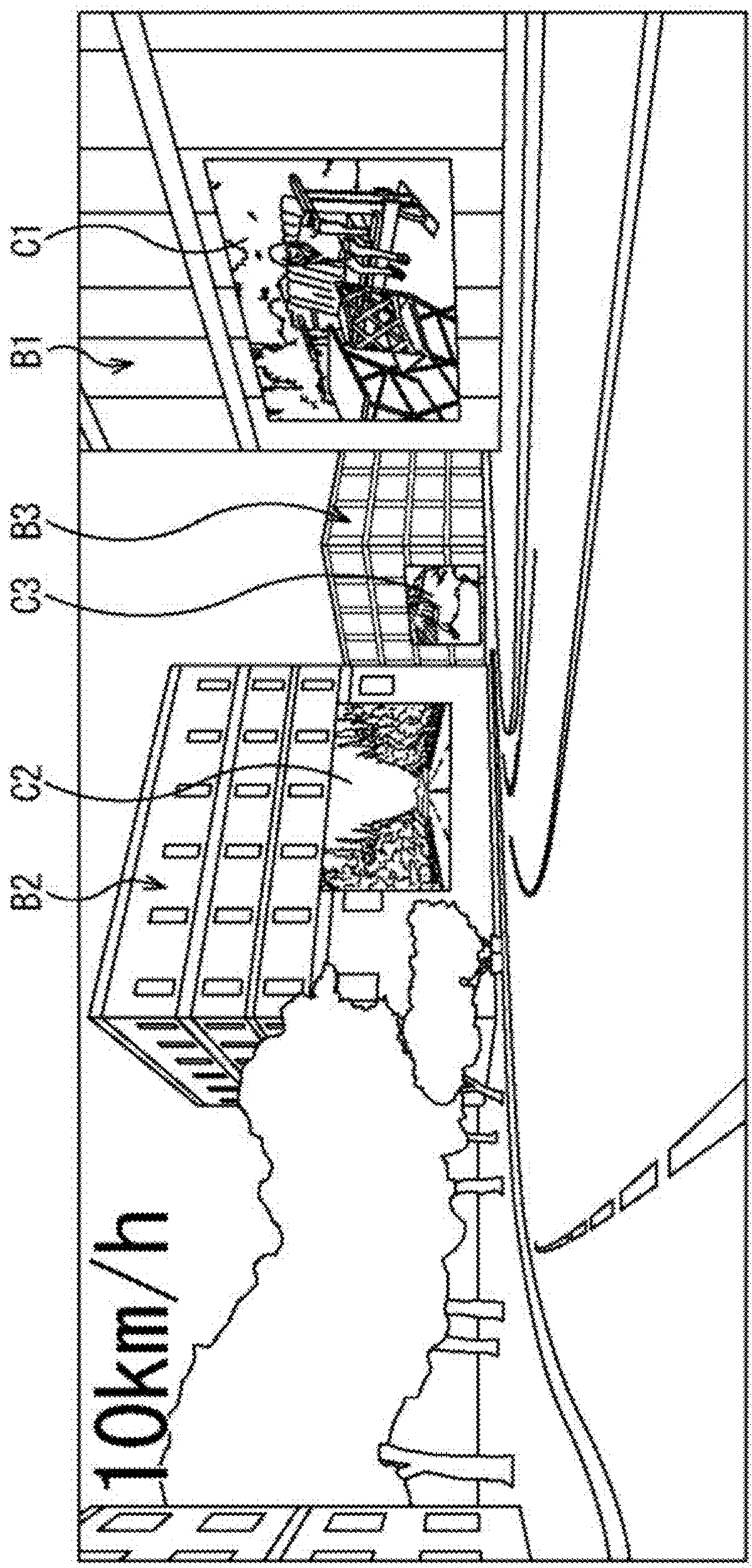

FIG. 2

FIG.3

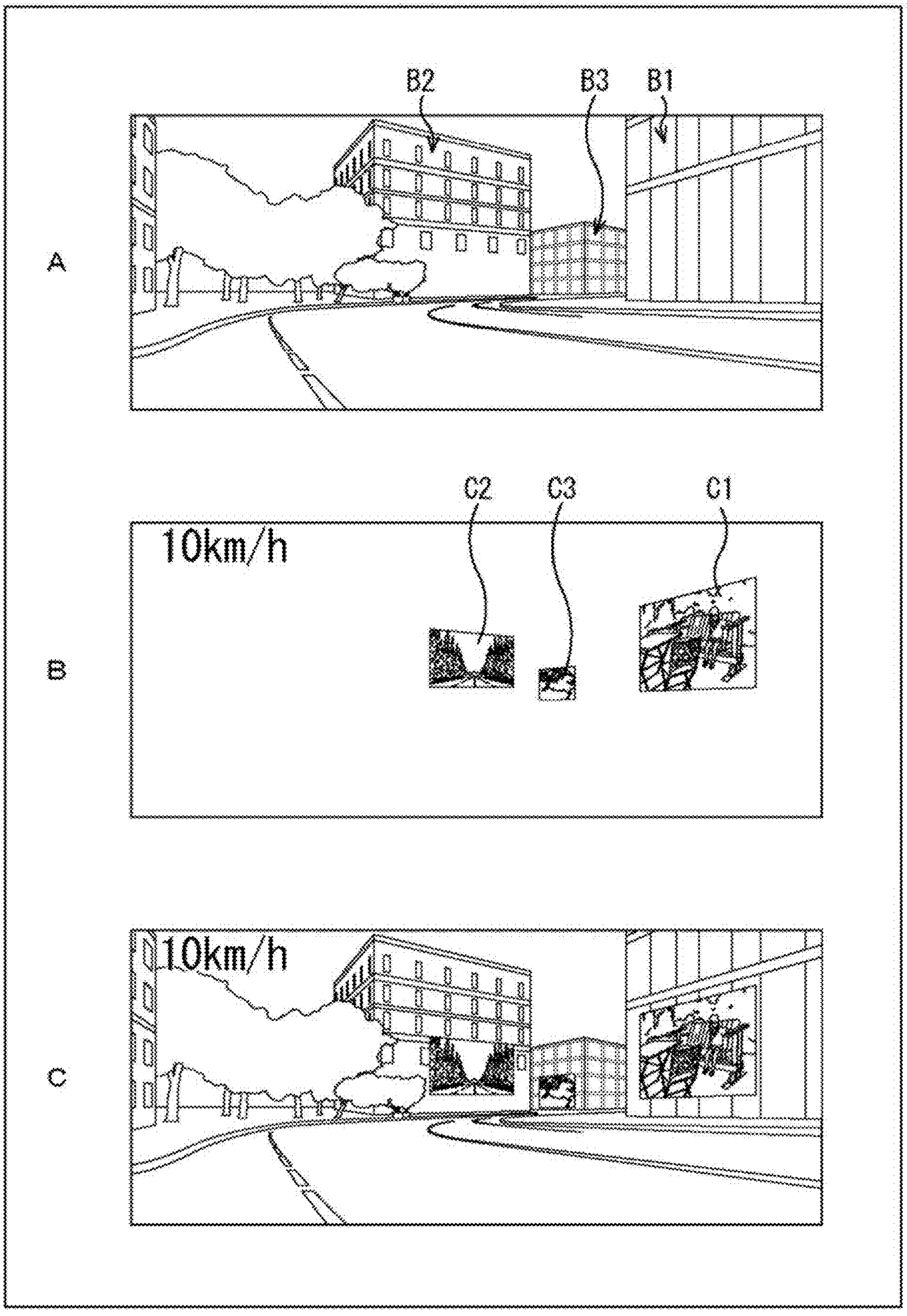

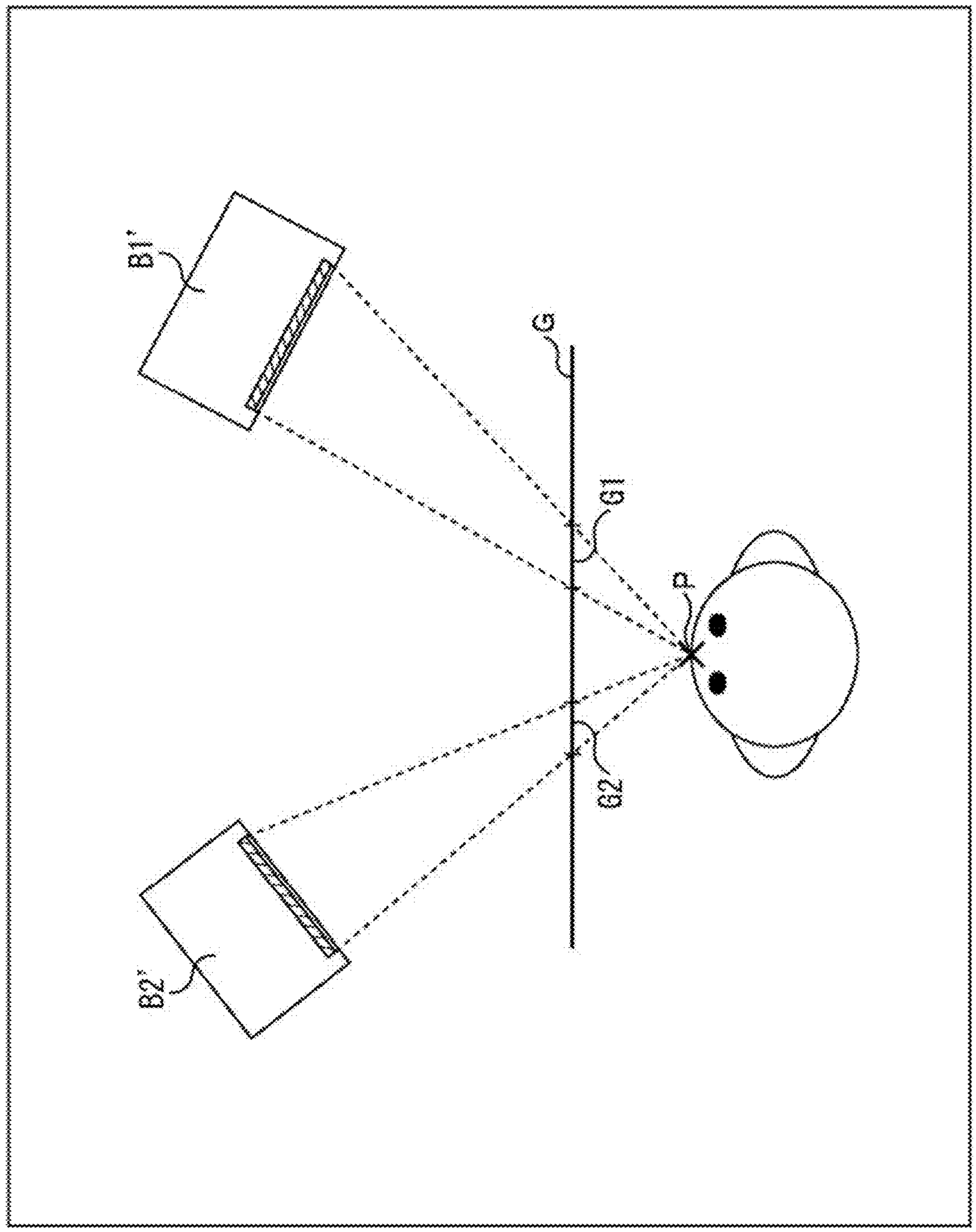

FIG. 4

FIG. 5

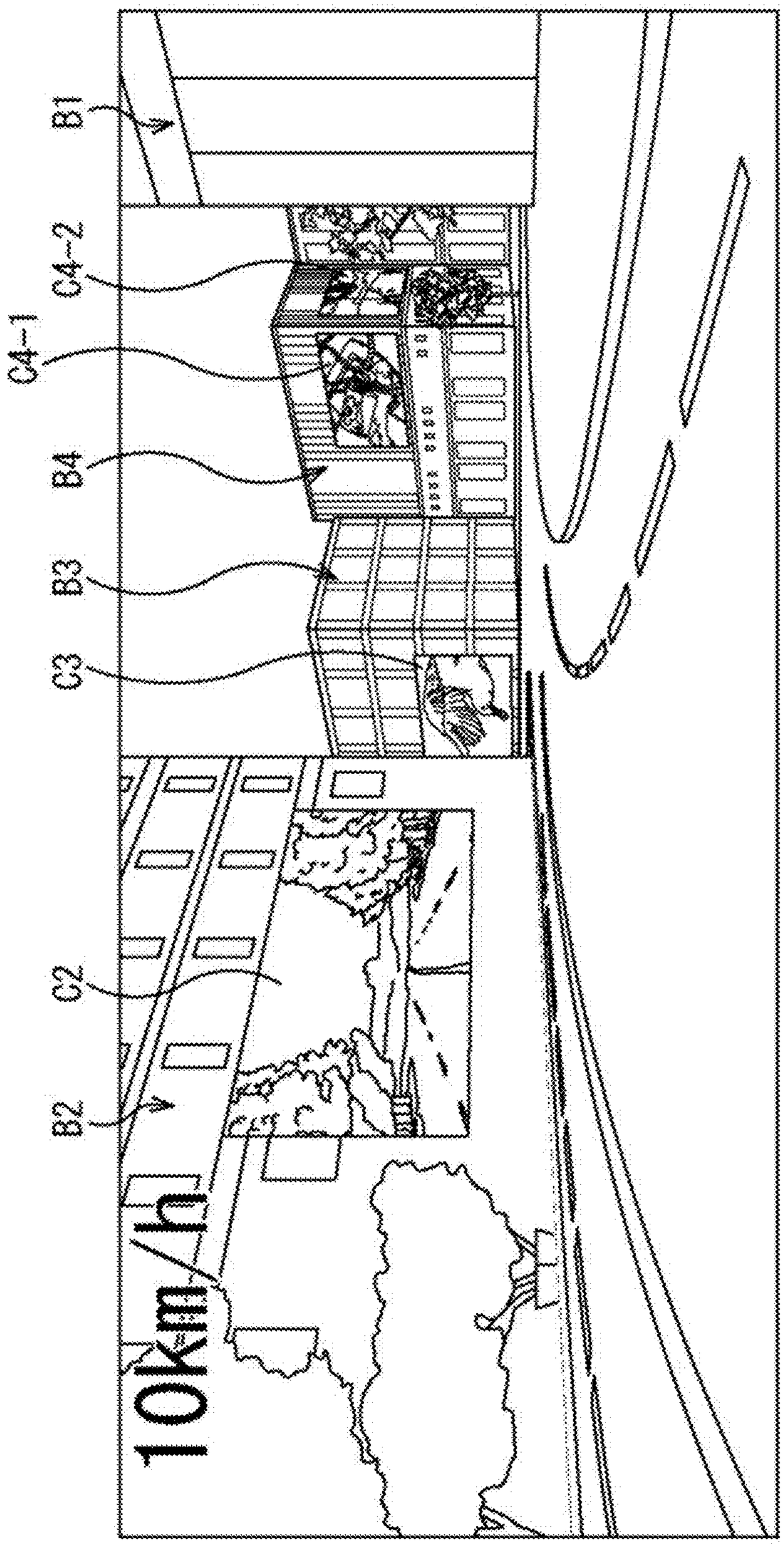

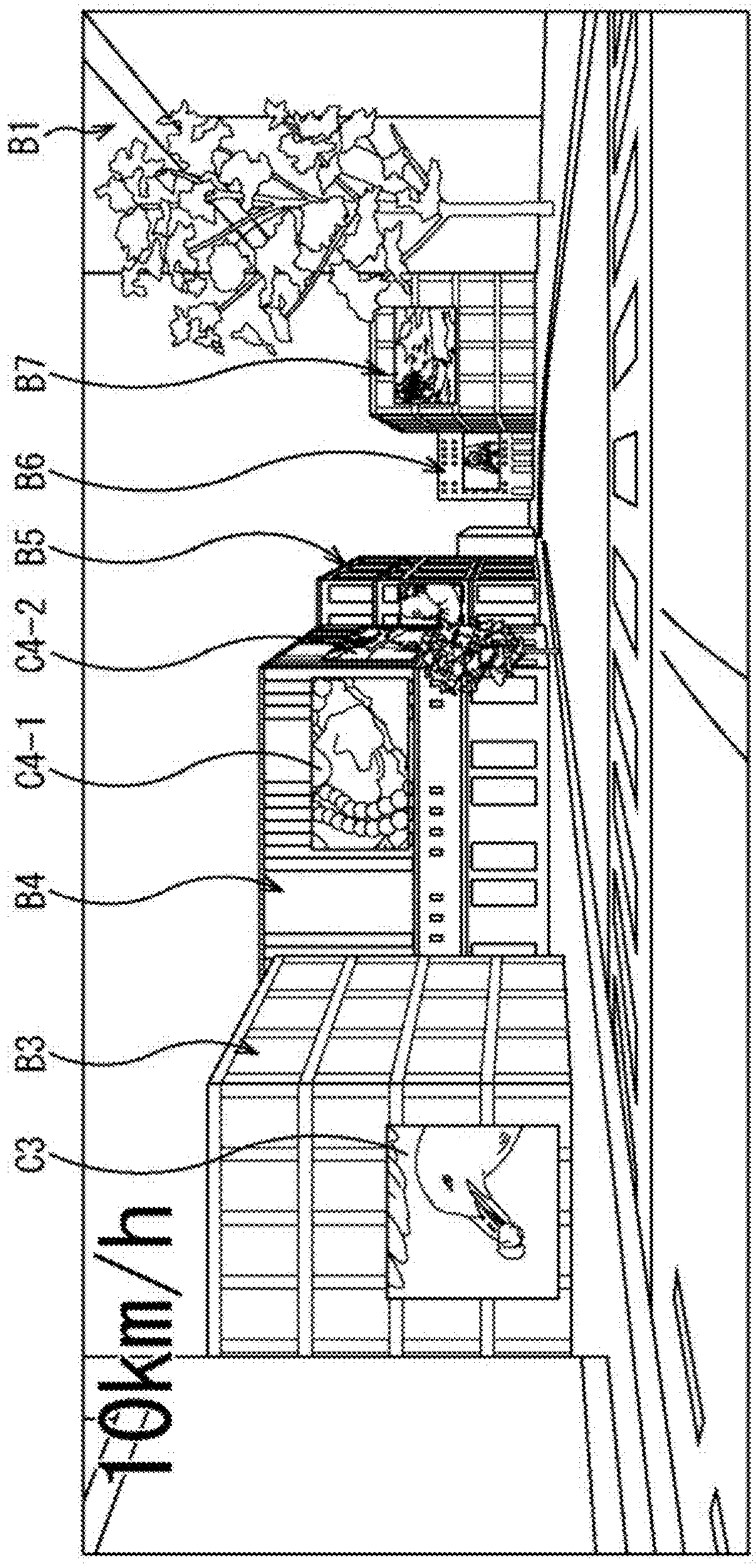

FIG. 6

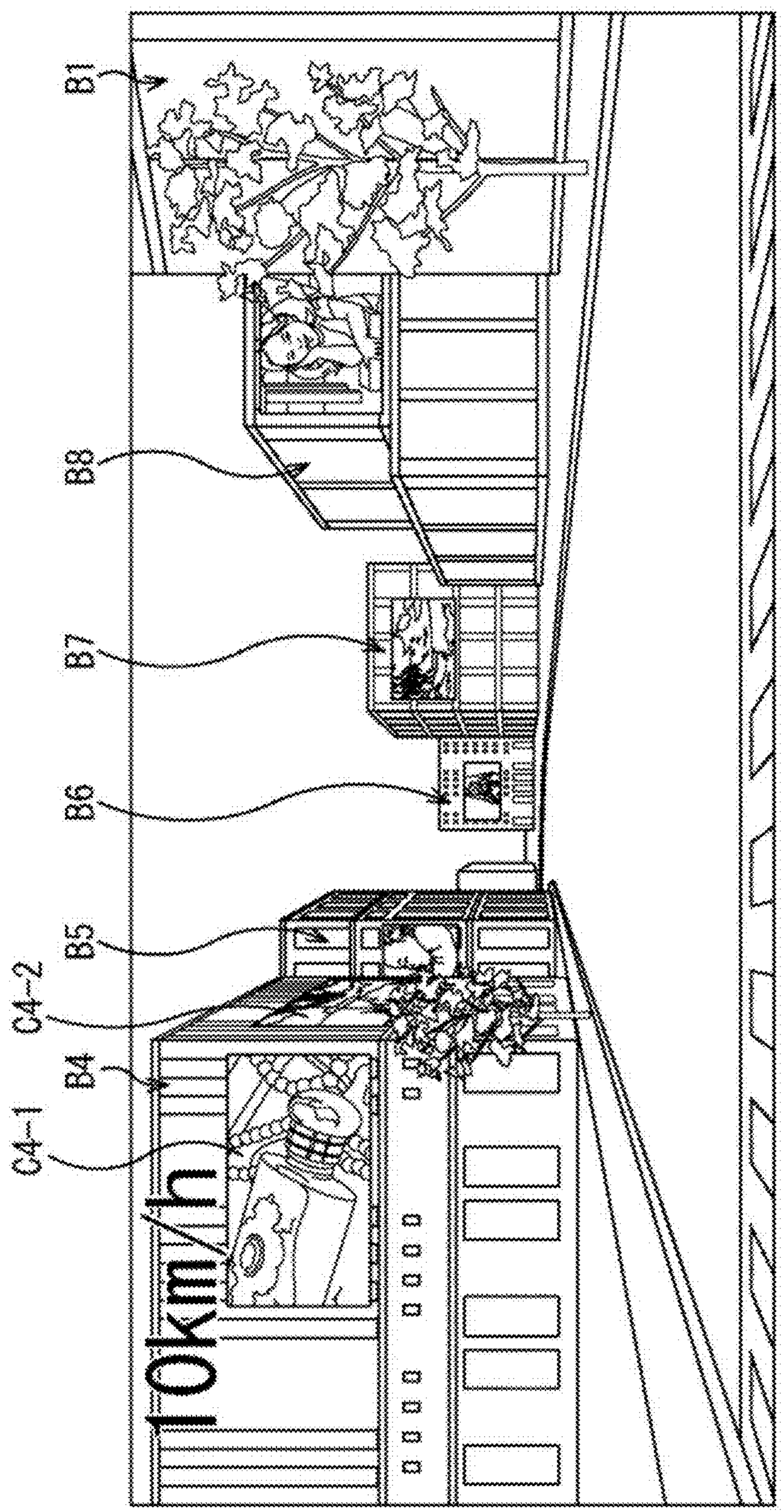

FIG. 7

FIG. 8

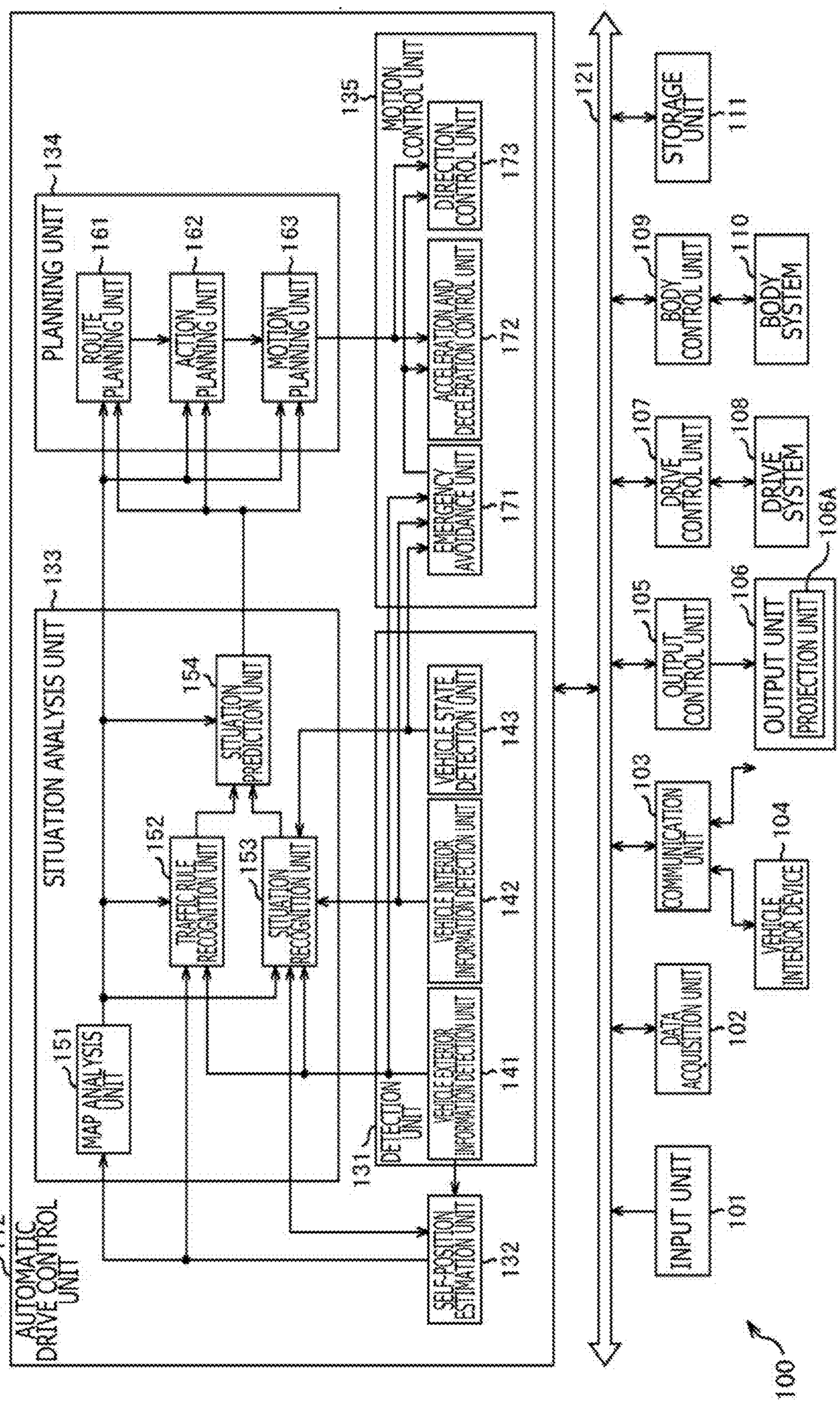
AUTOMATIC DRIVE CONTROL UNIT
112
PLANNING UNIT
134
ROUTE PLANNING UNIT
161
ACTION PLANNING UNIT
162
MOTION PLANNING UNIT
163
SITUATION ANALYSIS UNIT
133
MAP ANALYSIS UNIT
151
TRAFFIC RULE RECOGNITION UNIT
152
SITUATION RECOGNITION UNIT
153
SITUATION PREDICTION UNIT
154
SELF-POSITION ESTIMATION UNIT
132
DETECTION UNIT
131
VEHICLE EXTERIOR INFORMATION DETECTION UNIT
141
VEHICLE INTERIOR INFORMATION DETECTION UNIT
142
VEHICLE STATE DETECTION UNIT
143
MOTION CONTROL UNIT
135
EMERGENCY AVOIDANCE UNIT
171
ACCELERATION AND DECELERATION CONTROL UNIT
172
DIRECTION CONTROL UNIT
173
121
INPUT UNIT
101
DATA ACQUISITION UNIT
102
COMMUNICATION UNIT
103
VEHICLE INTERIOR DEVICE
104
OUTPUT CONTROL UNIT
105
OUTPUT UNIT
106
PROJECTION UNIT
106A
DRIVE CONTROL UNIT
107
DRIVE SYSTEM
108
BODY CONTROL UNIT
109
BODY SYSTEM
110
STORAGE UNIT
111
100

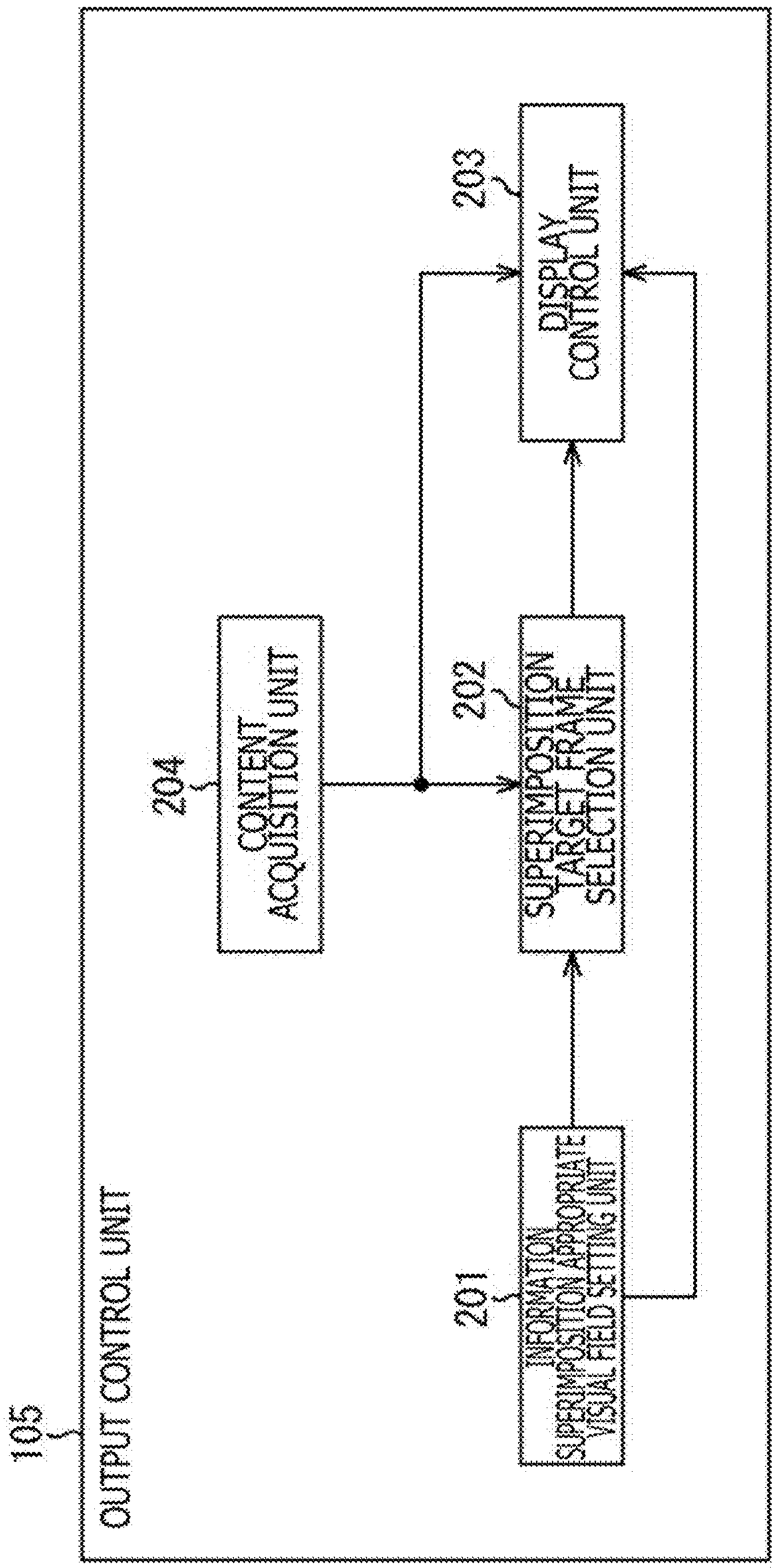
105
OUTPUT CONTROL UNIT
201
INFORMATION SUPERIMPOSITION APPROPRIATE VISUAL FIELD SETTING UNIT
202
SUPERIMPOSITION TARGET FRAME SELECTION UNIT
203
DISPLAY CONTROL UNIT
204
CONTENT ACQUISITION UNIT

FIG. 9

FIG. 10

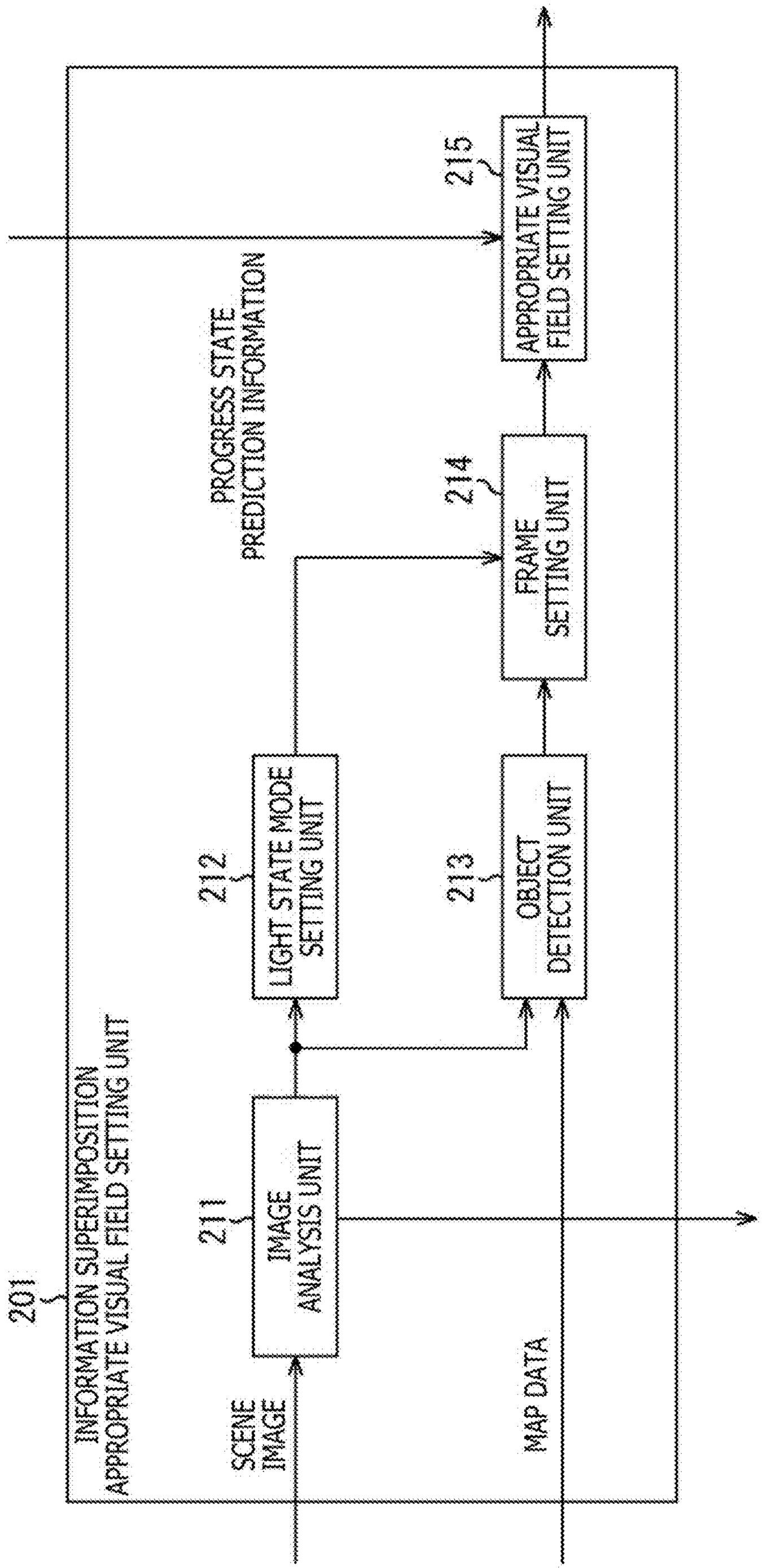
201
INFORMATION SUPERIMPOSITION
APPROPRIATE VISUAL FIELD SETTING UNIT
SCENE IMAGE
211
IMAGE ANALYSIS UNIT
212
LIGHT STATE MODE SETTING UNIT
PROGRESS STATE PREDICTION INFORMATION
213
OBJECT DETECTION UNIT
214
FRAME SETTING UNIT
215
APPROPRIATE VISUAL FIELD SETTING UNIT
MAP DATA

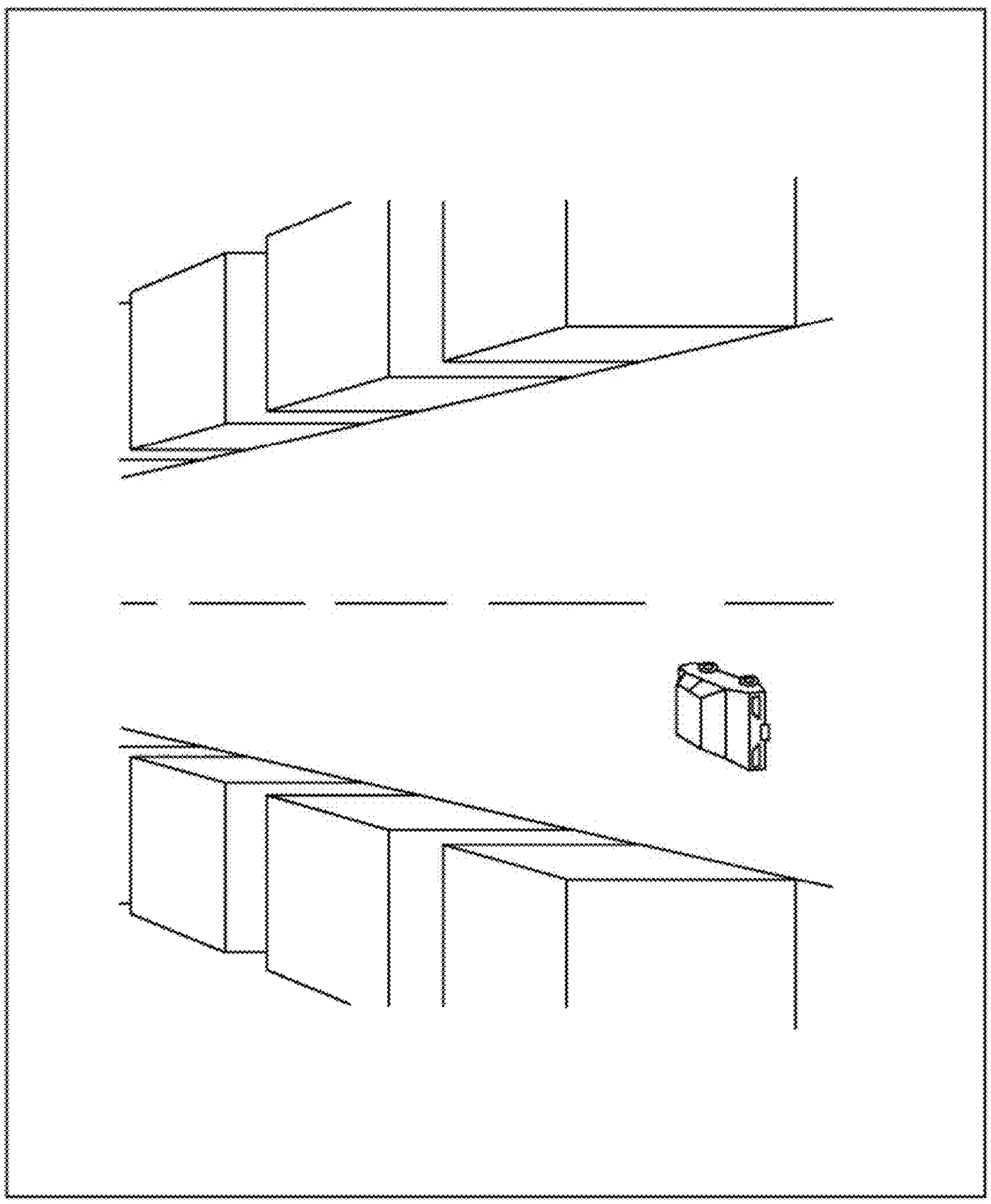

FIG. 11

FIG. 12

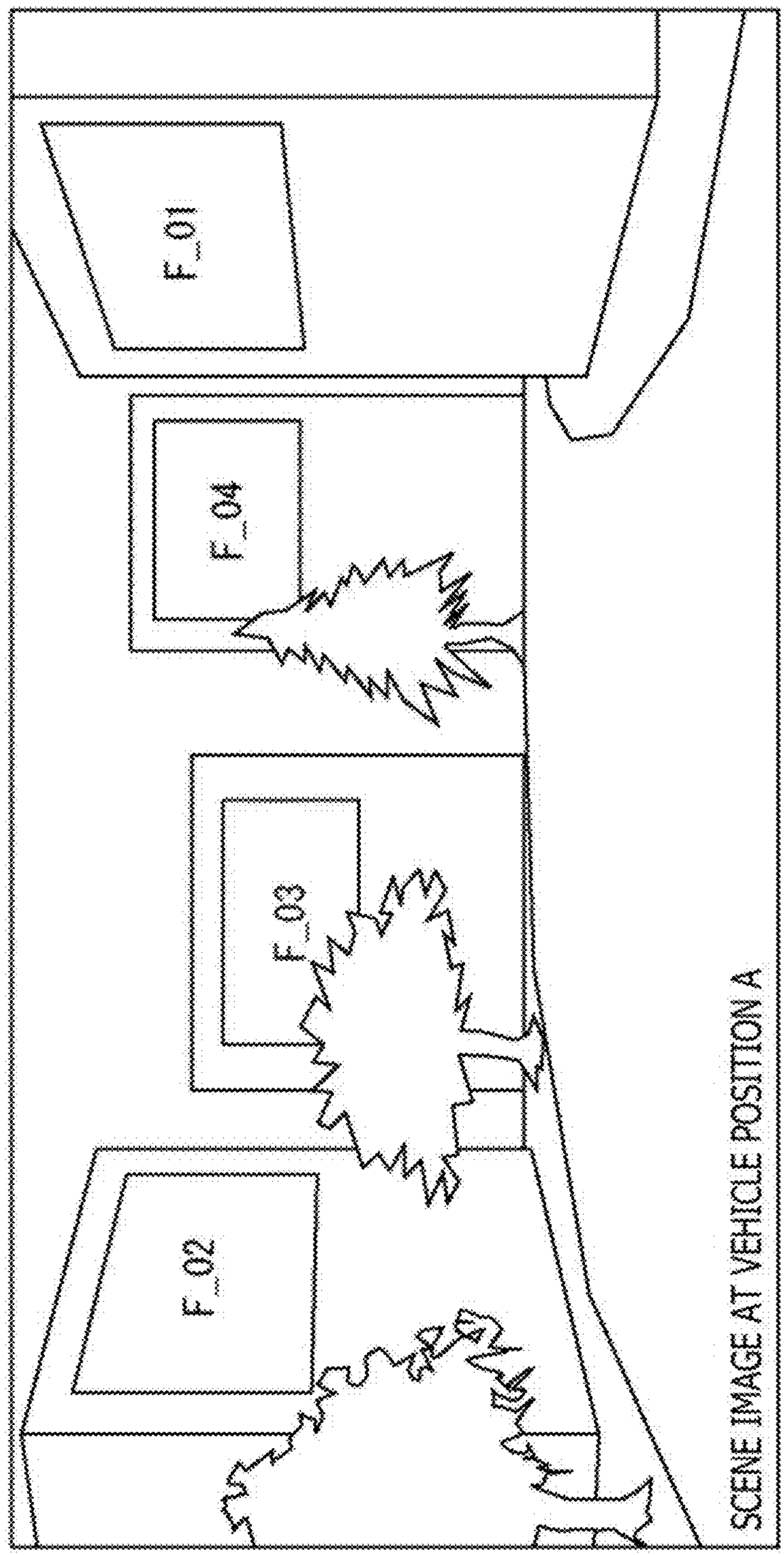

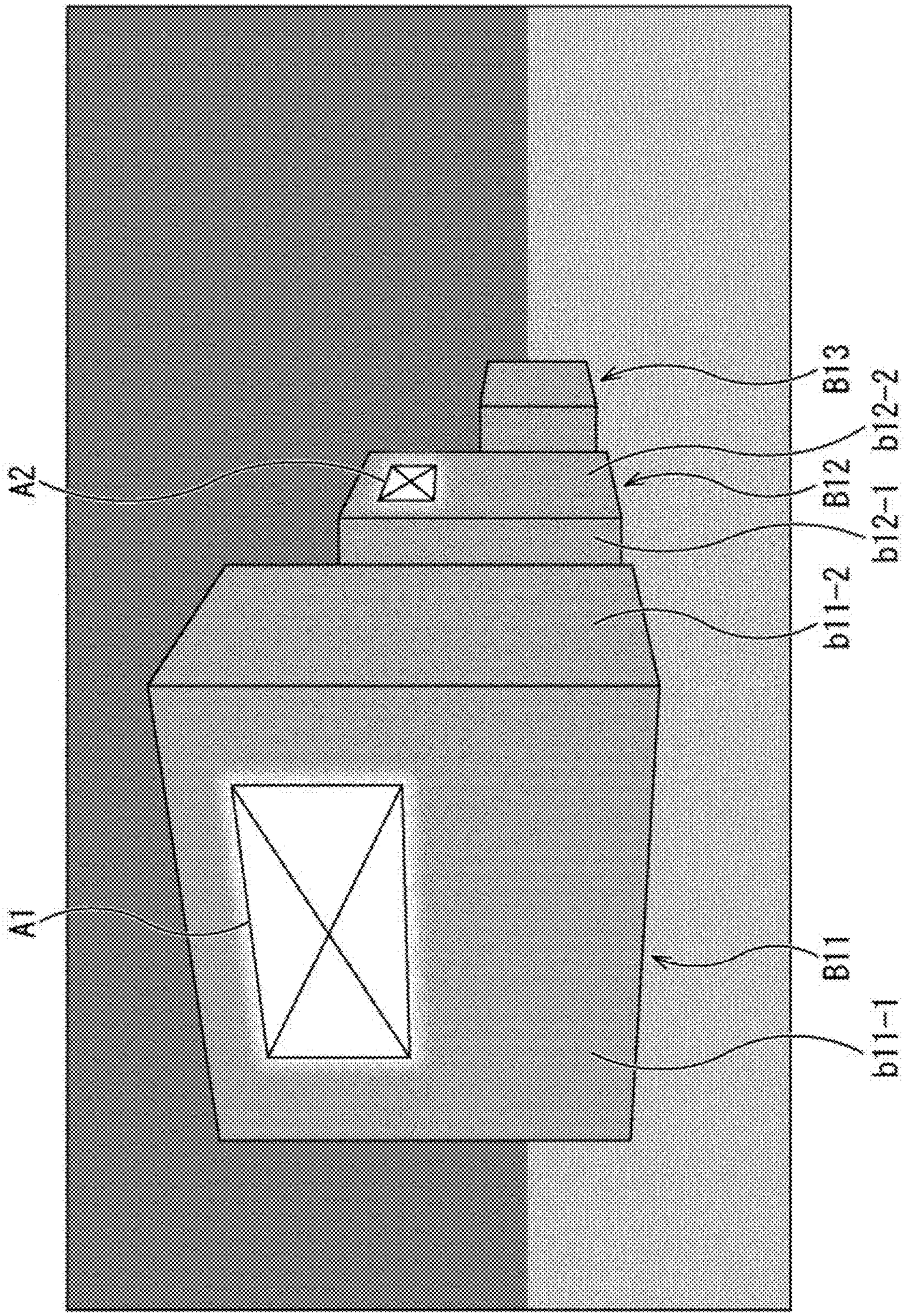

FIG. 13

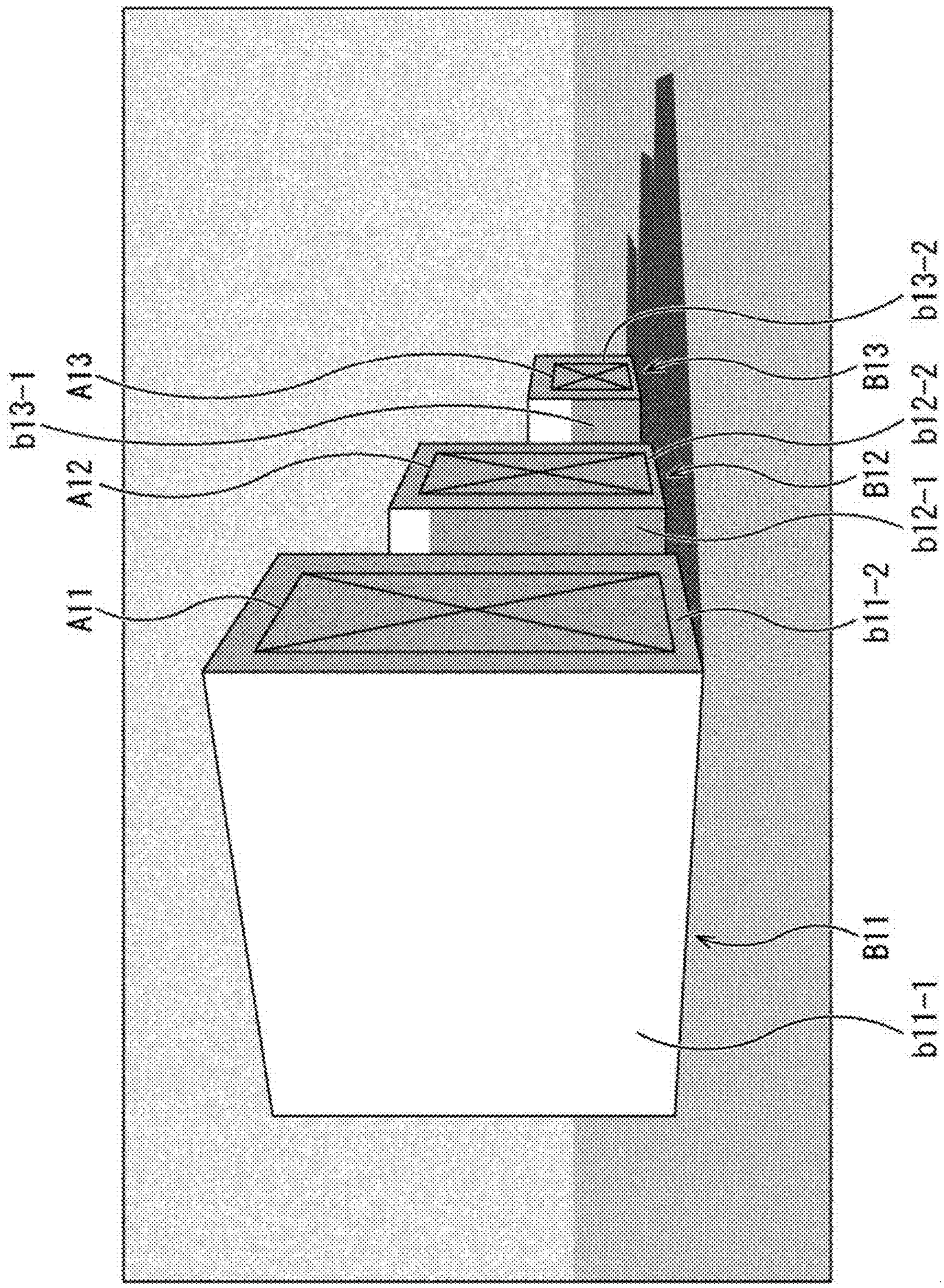

FIG. 14

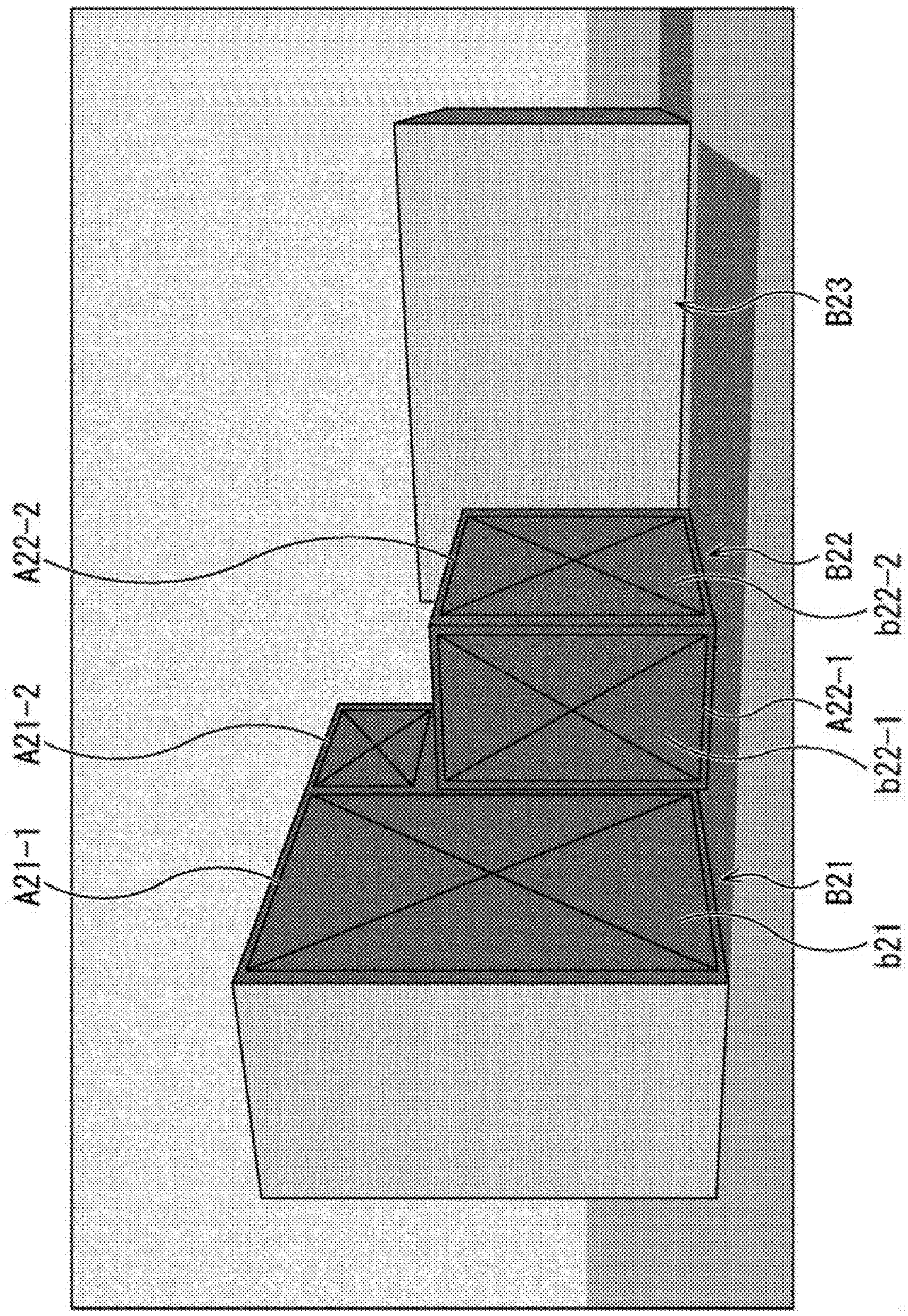

FIG. 15

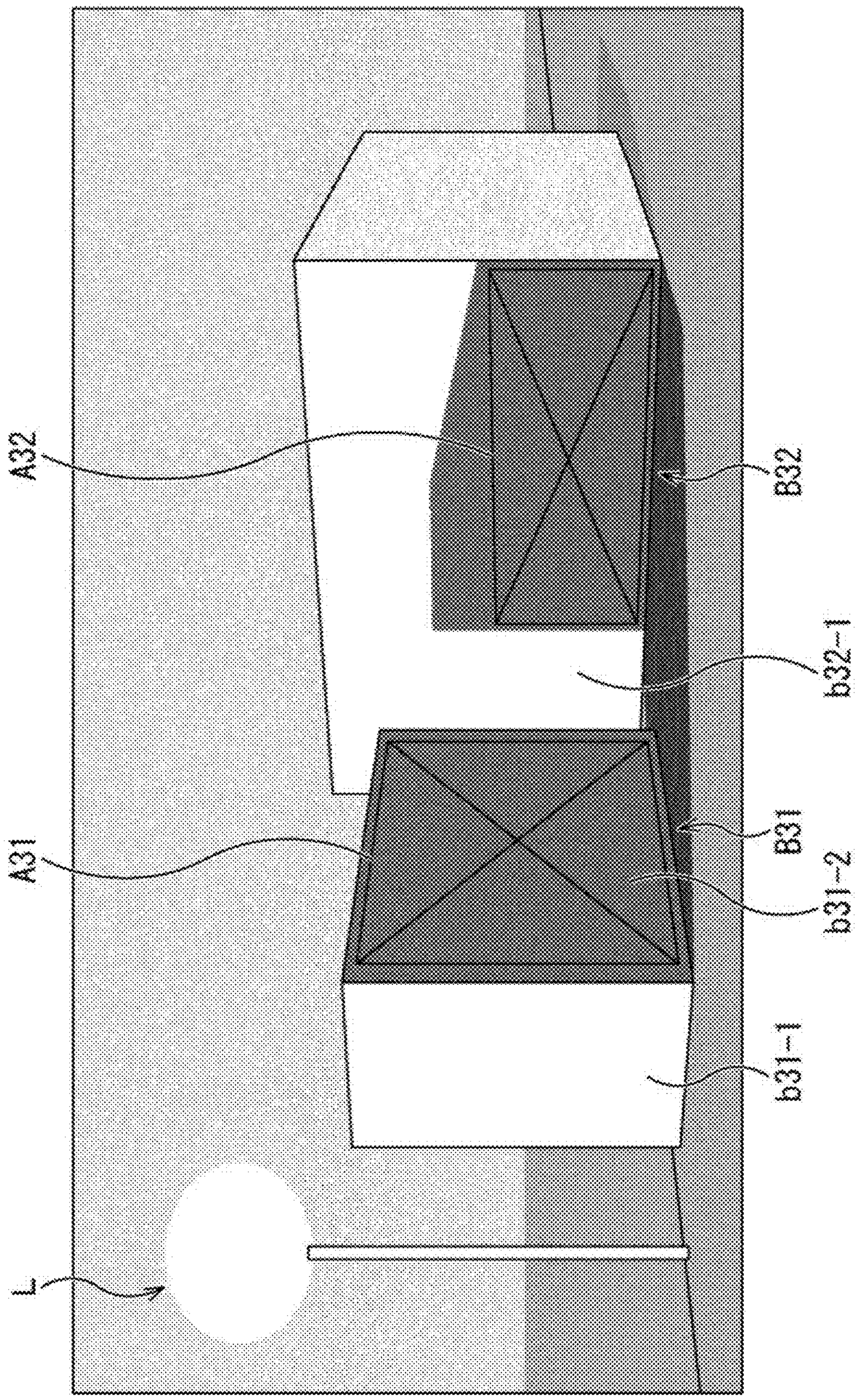

FIG. 16

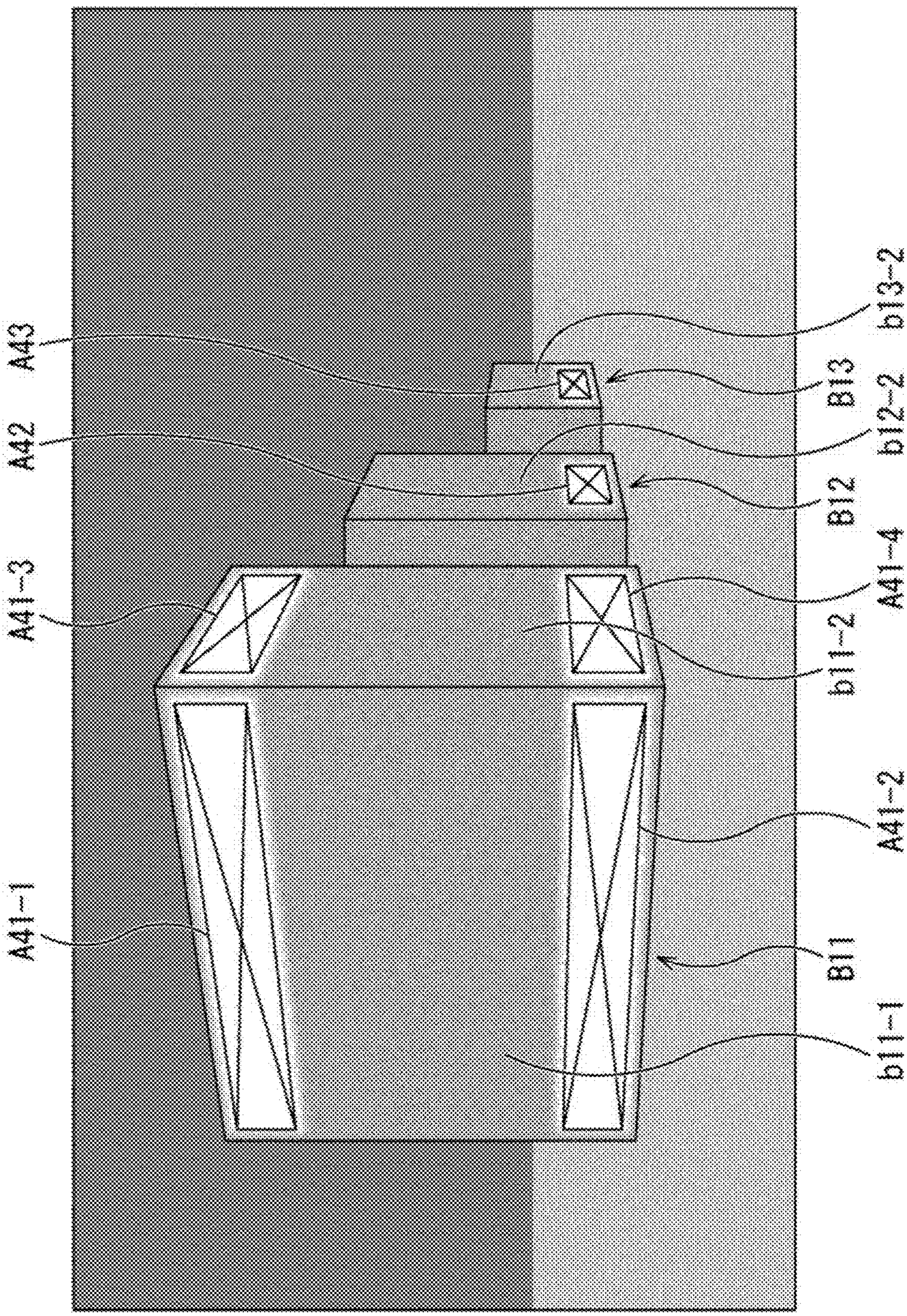

FIG. 17

FIG. 18

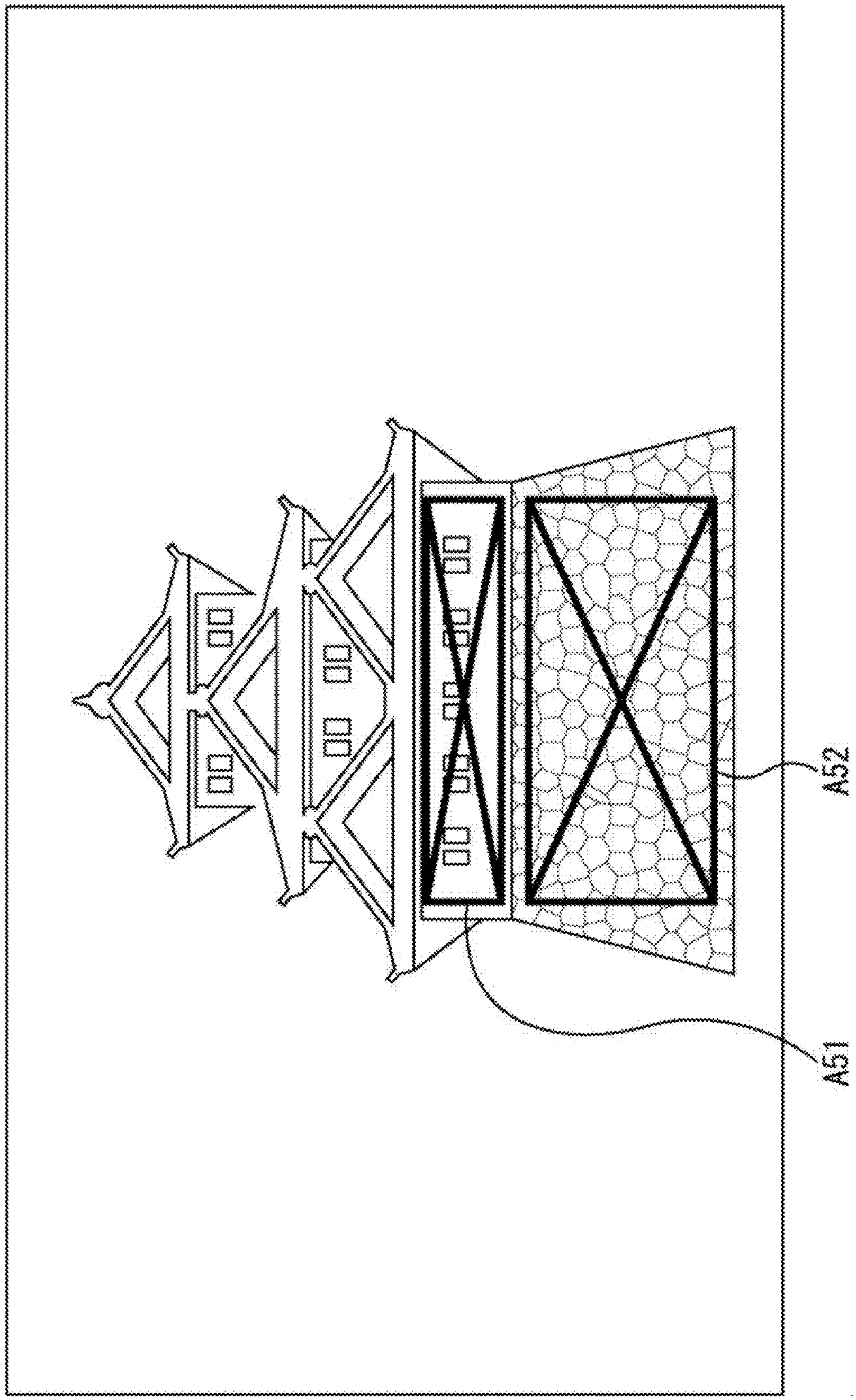

FIG. 19

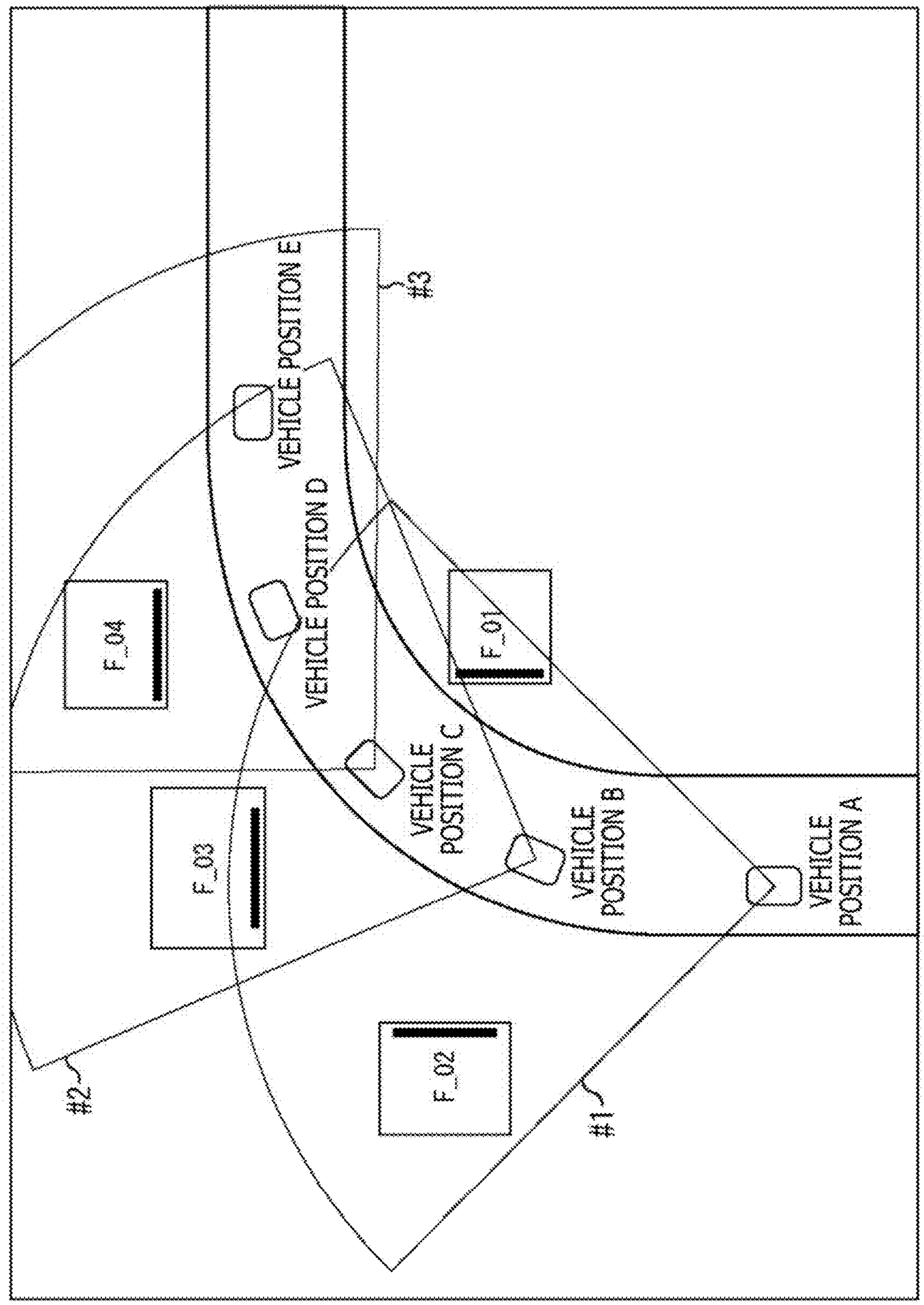
F_04
F_03
F_02
F_01
VEHICLE POSITION E
VEHICLE POSITION D
VEHICLE POSITION C
VEHICLE POSITION B
VEHICLE POSITION A
#3
#2
#1

FIG. 20

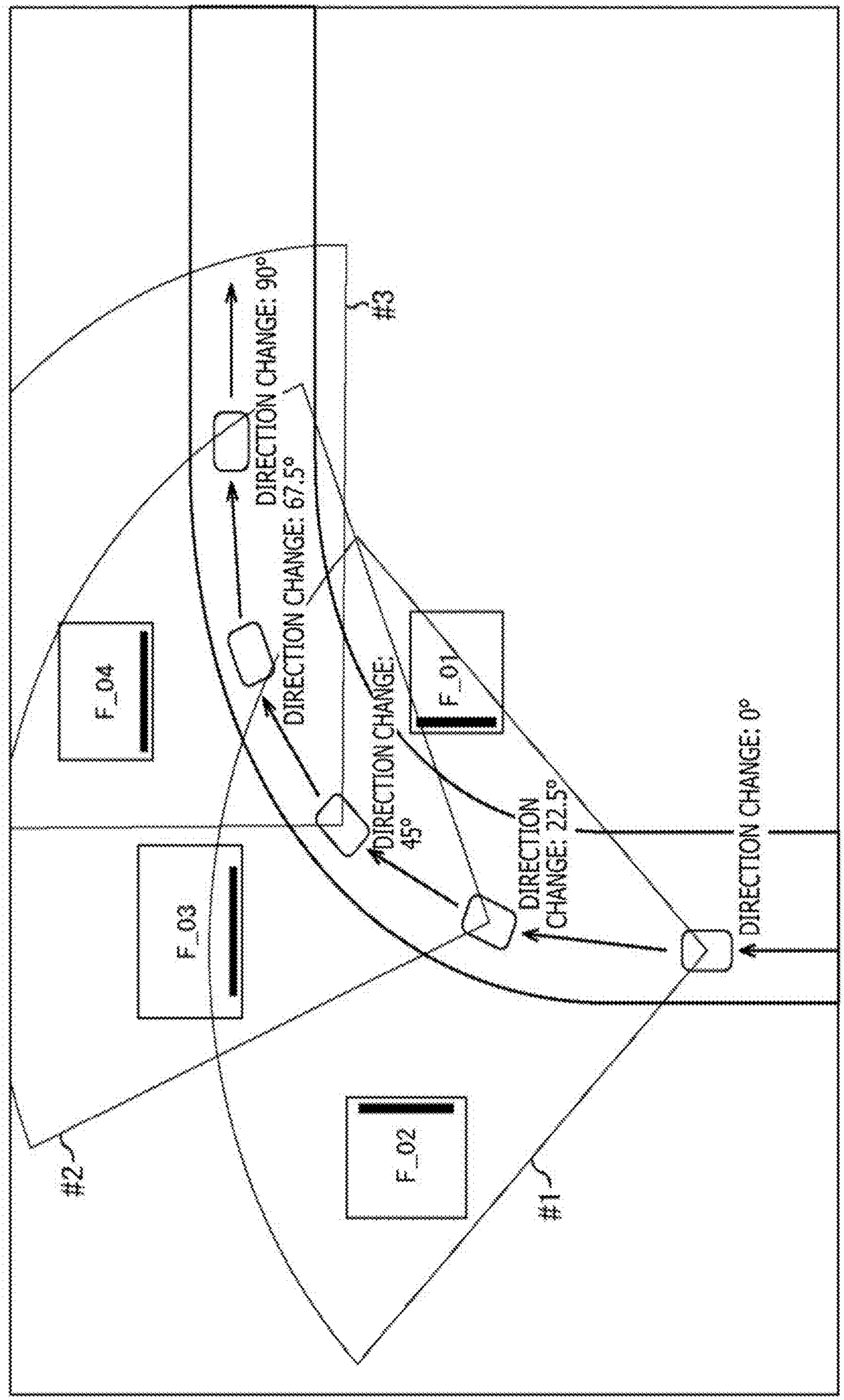
F_04
F_03
F_02
F_01
DIRECTION CHANGE: 67.5°
DIRECTION CHANGE: 90°
DIRECTION CHANGE: 45°
DIRECTION CHANGE: 22.5°
DIRECTION CHANGE: 0°
#1
#2
#3

FIG.21

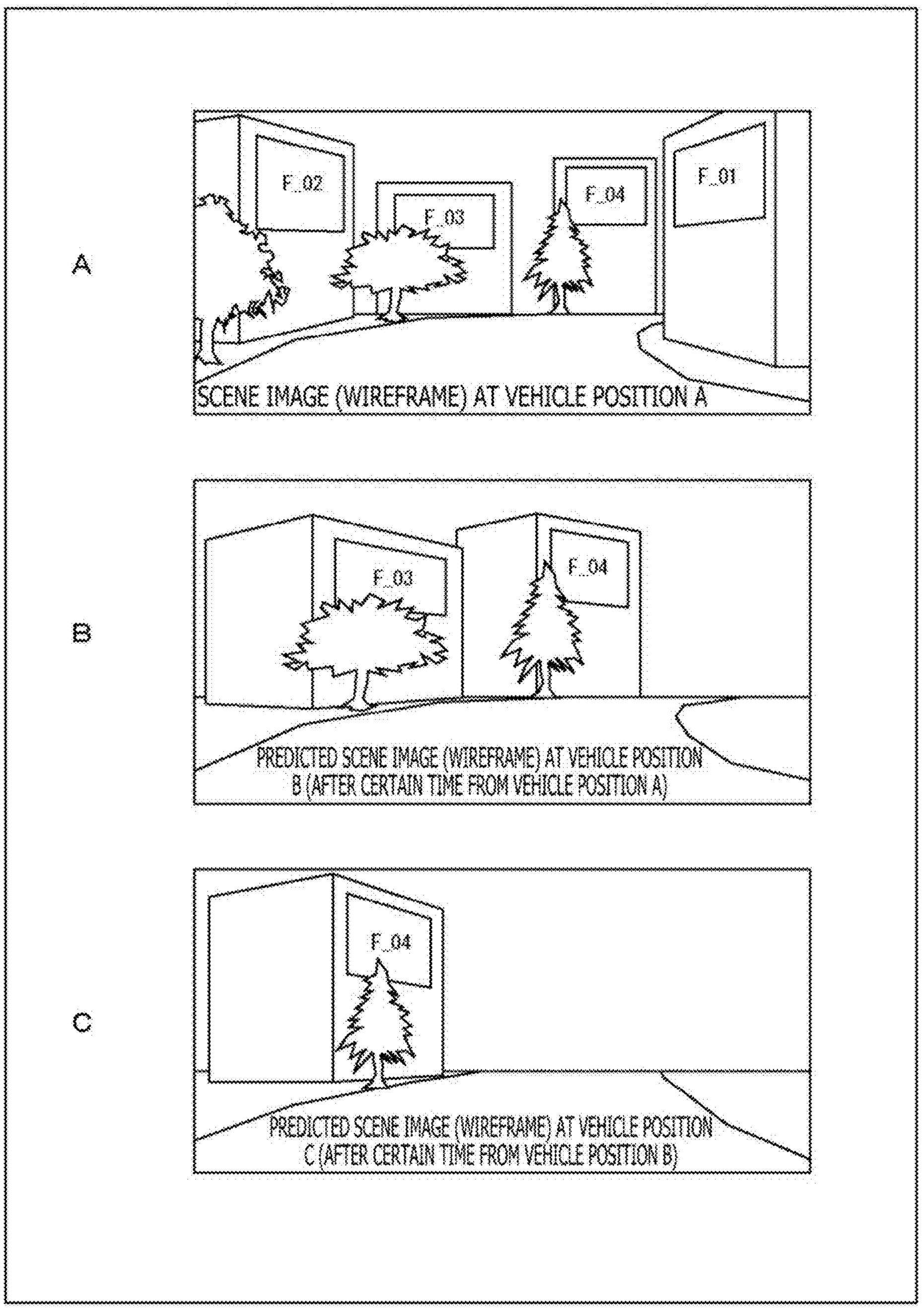
A
F_02
F_03
F_04
F_01
SCENE IMAGE (WIREFRAME) AT VEHICLE POSITION A
B
F_03
F_04
PREDICTED SCENE IMAGE (WIREFRAME) AT VEHICLE POSITION B (AFTER CERTAIN TIME FROM VEHICLE POSITION A)
C
F_04
PREDICTED SCENE IMAGE (WIREFRAME) AT VEHICLE POSITION C (AFTER CERTAIN TIME FROM VEHICLE POSITION B)

FIG. 22

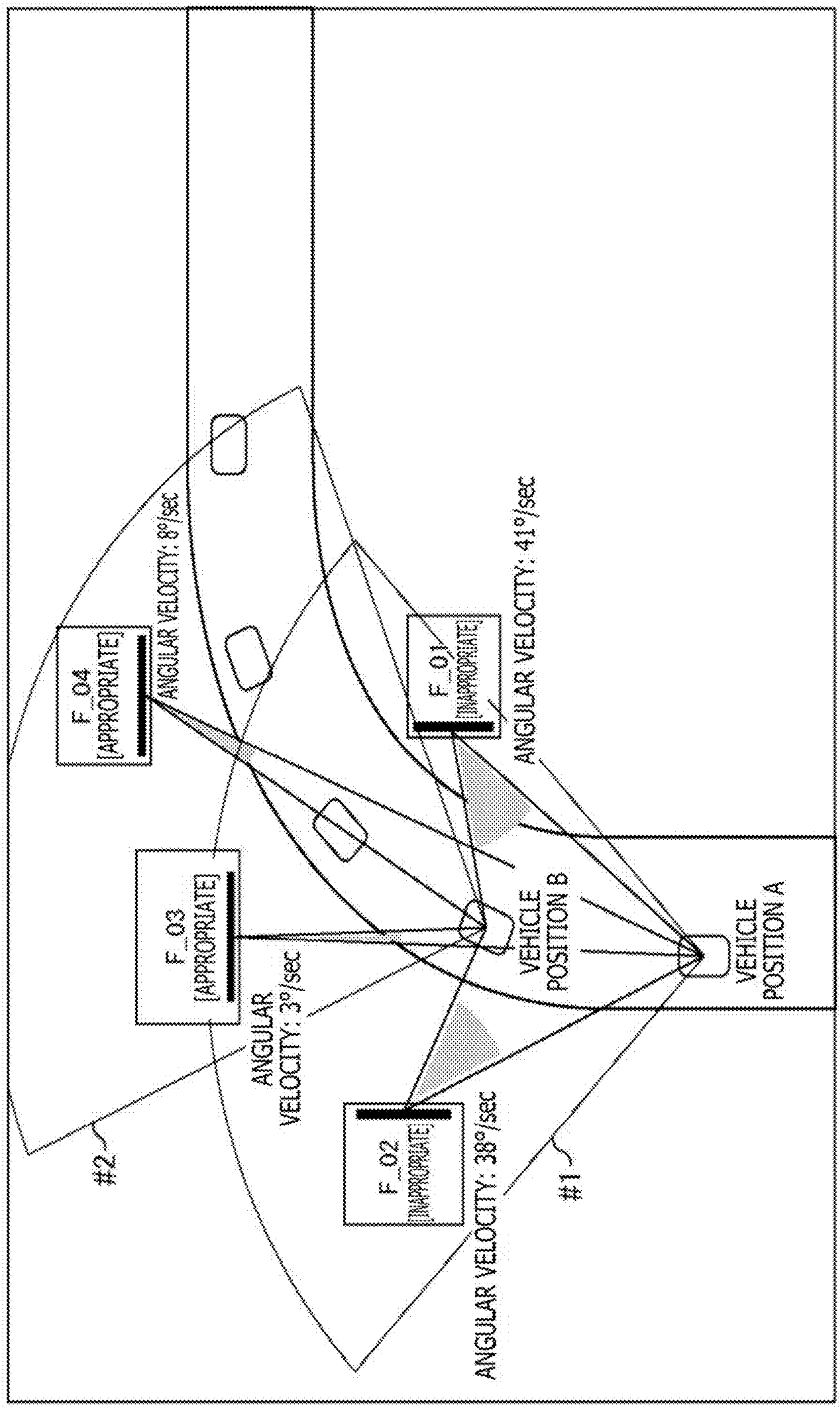
F_04
[APPROPRIATE]
ANGULAR VELOCITY: 8°/sec
F_01
[INAPPROPRIATE]
ANGULAR VELOCITY: 41°/sec
F_03
[APPROPRIATE]
ANGULAR VELOCITY: 3°/sec
F_02
[INAPPROPRIATE]
ANGULAR VELOCITY: 38°/sec
VEHICLE POSITION B
VEHICLE POSITION A
#2
#1

FIG. 23

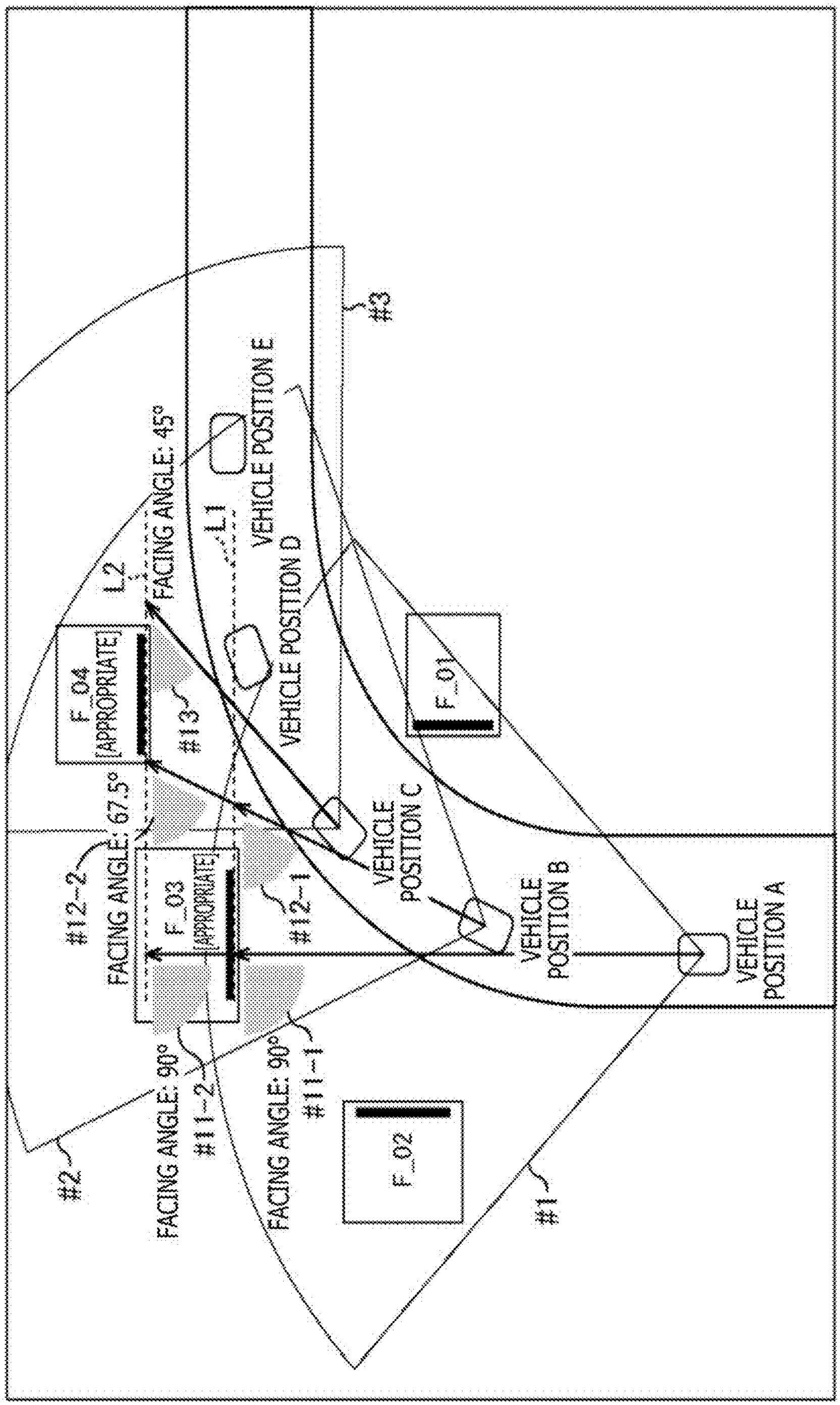
#3
VEHICLE POSITION E
FACING ANGLE: 45°
L1
L2
VEHICLE POSITION D
F_04
[APPROPRIATE]
#13
F_01
VEHICLE
POSITION C
#12-2
FACING ANGLE: 67.5°
F_03
[APPROPRIATE]
#12-1
VEHICLE
POSITION B
VEHICLE
POSITION A
FACING ANGLE: 90°
#11-2
FACING ANGLE: 90°
#11-1
F_02
#2
#1

FIG. 24

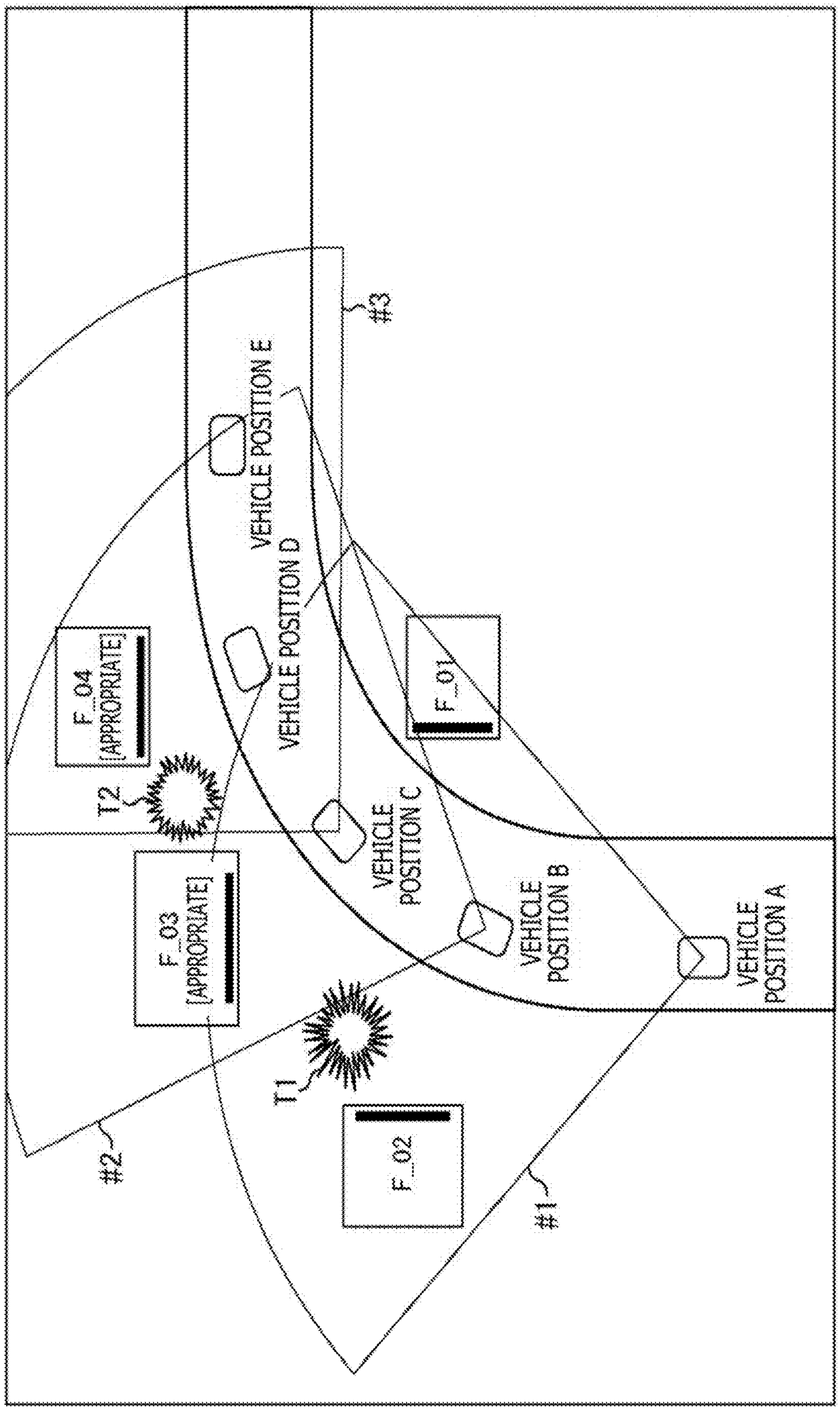
#3
VEHICLE POSITION E
VEHICLE POSITION D
F_04
[APPROPRIATE]
F_01
T2
VEHICLE POSITION C
F_03
[APPROPRIATE]
VEHICLE POSITION B
VEHICLE POSITION A
T1
F_02
#2
#1

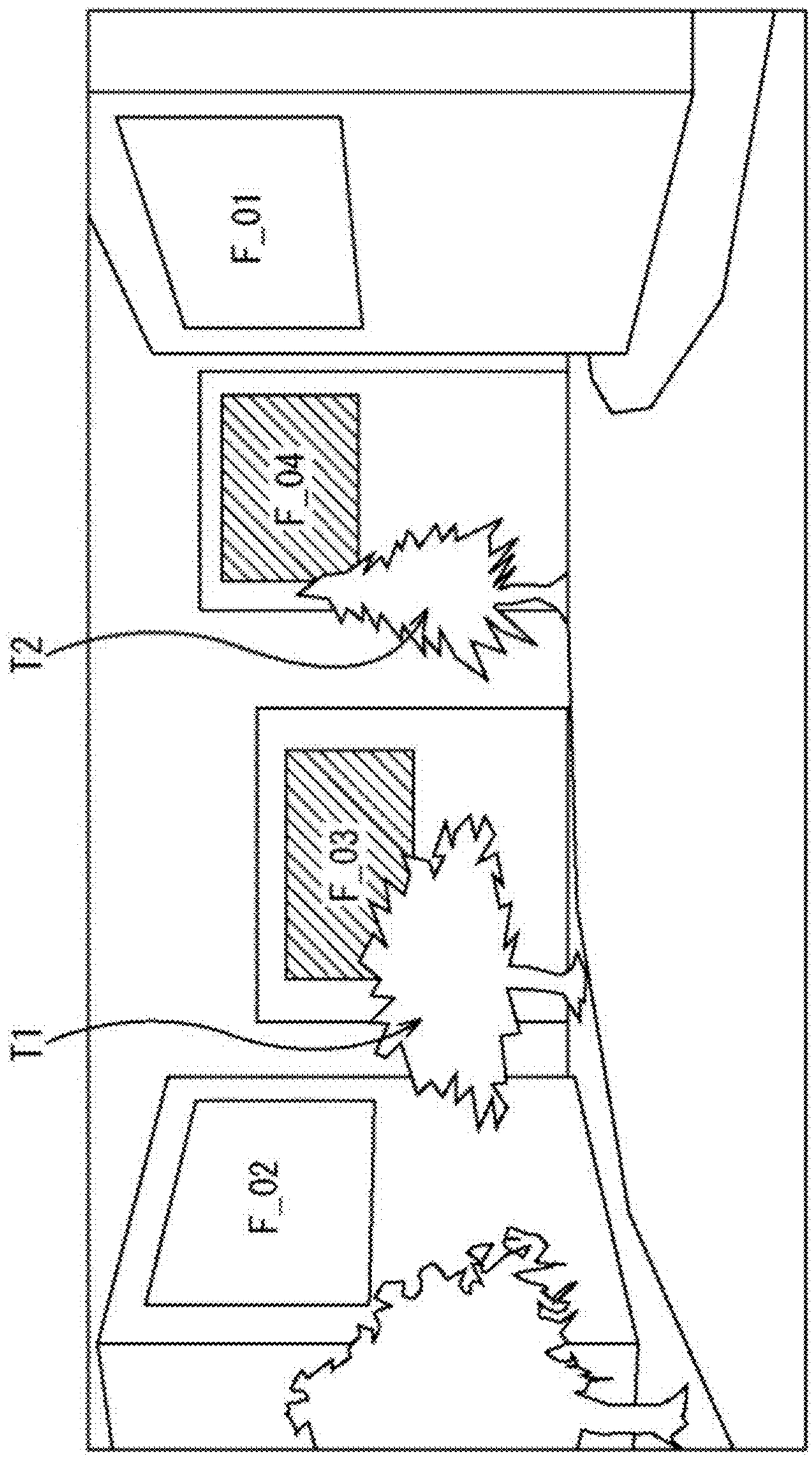

FIG. 25

FIG. 26

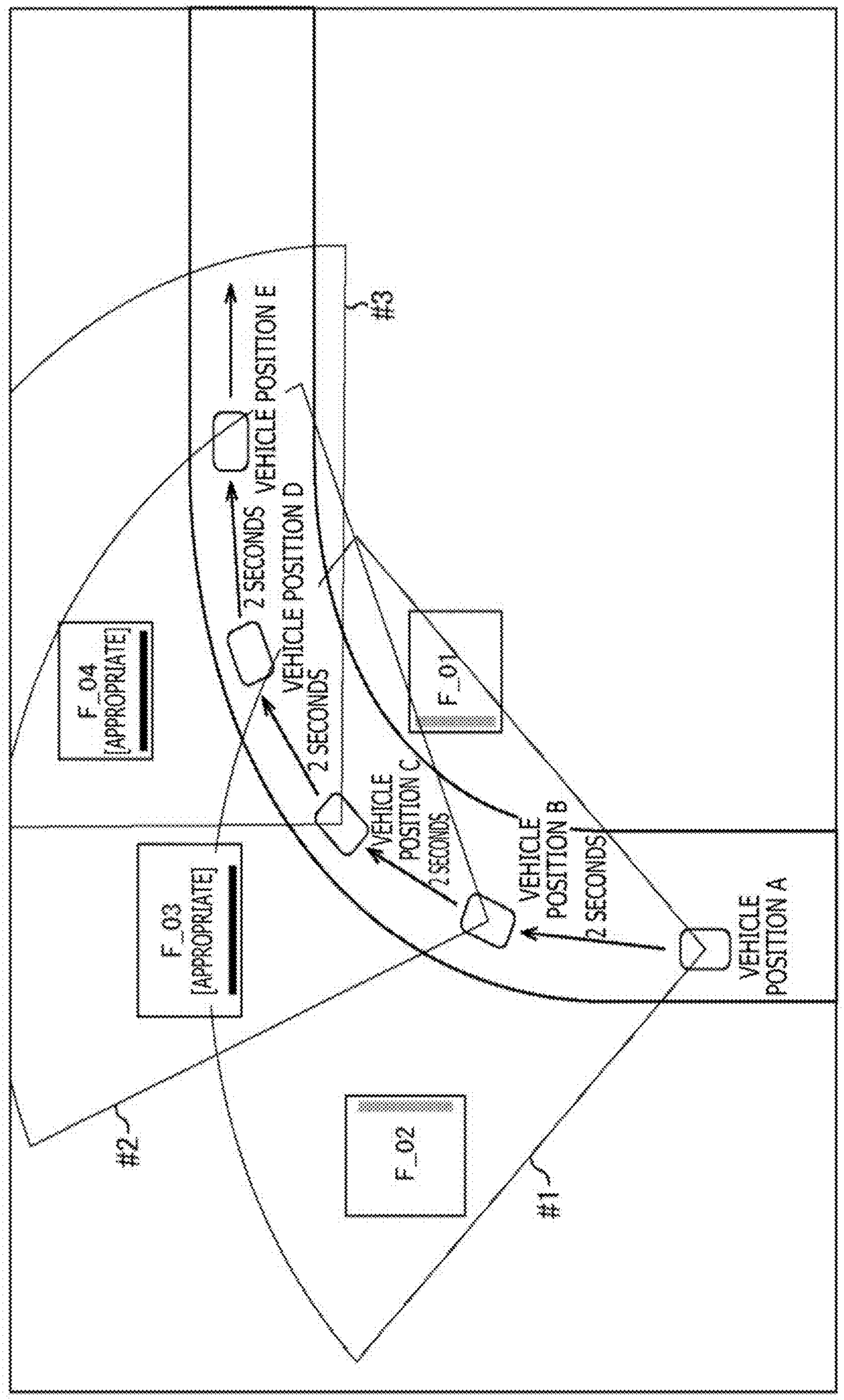
F_04
[APPROPRIATE]
F_03
[APPROPRIATE]
F_02
F_01
#1
#2
#3
VEHICLE POSITION A
VEHICLE POSITION B
2 SECONDS
VEHICLE POSITION C
2 SECONDS
VEHICLE POSITION D
2 SECONDS
VEHICLE POSITION E
2 SECONDS

FIG. 27

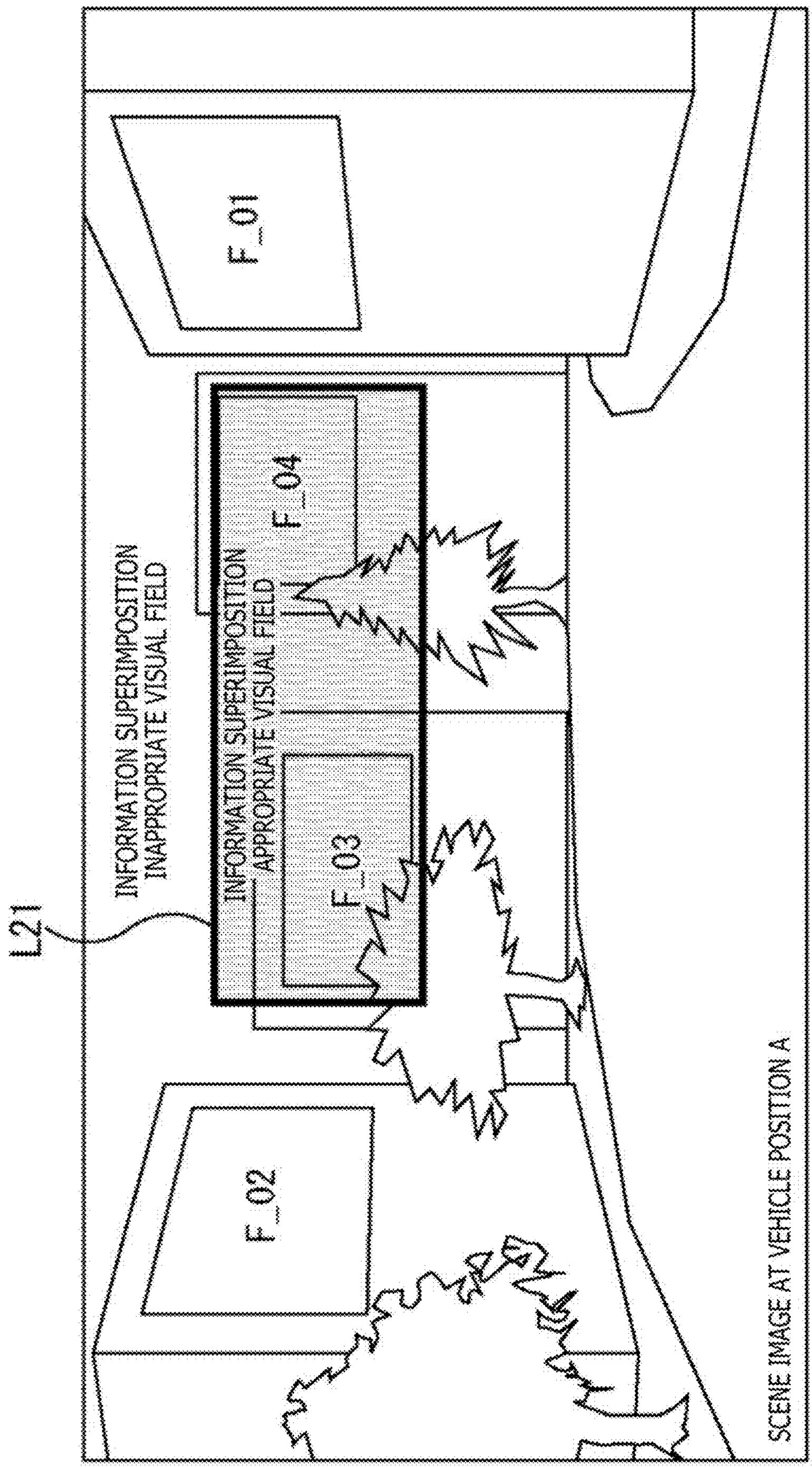
F_01
F_02
F_03
F_04
L21
INFORMATION SUPERIMPOSITION
INAPPROPRIATE VISUAL FIELD
INFORMATION SUPERIMPOSITION
APPROPRIATE VISUAL FIELD
SCENE IMAGE AT VEHICLE POSITION A

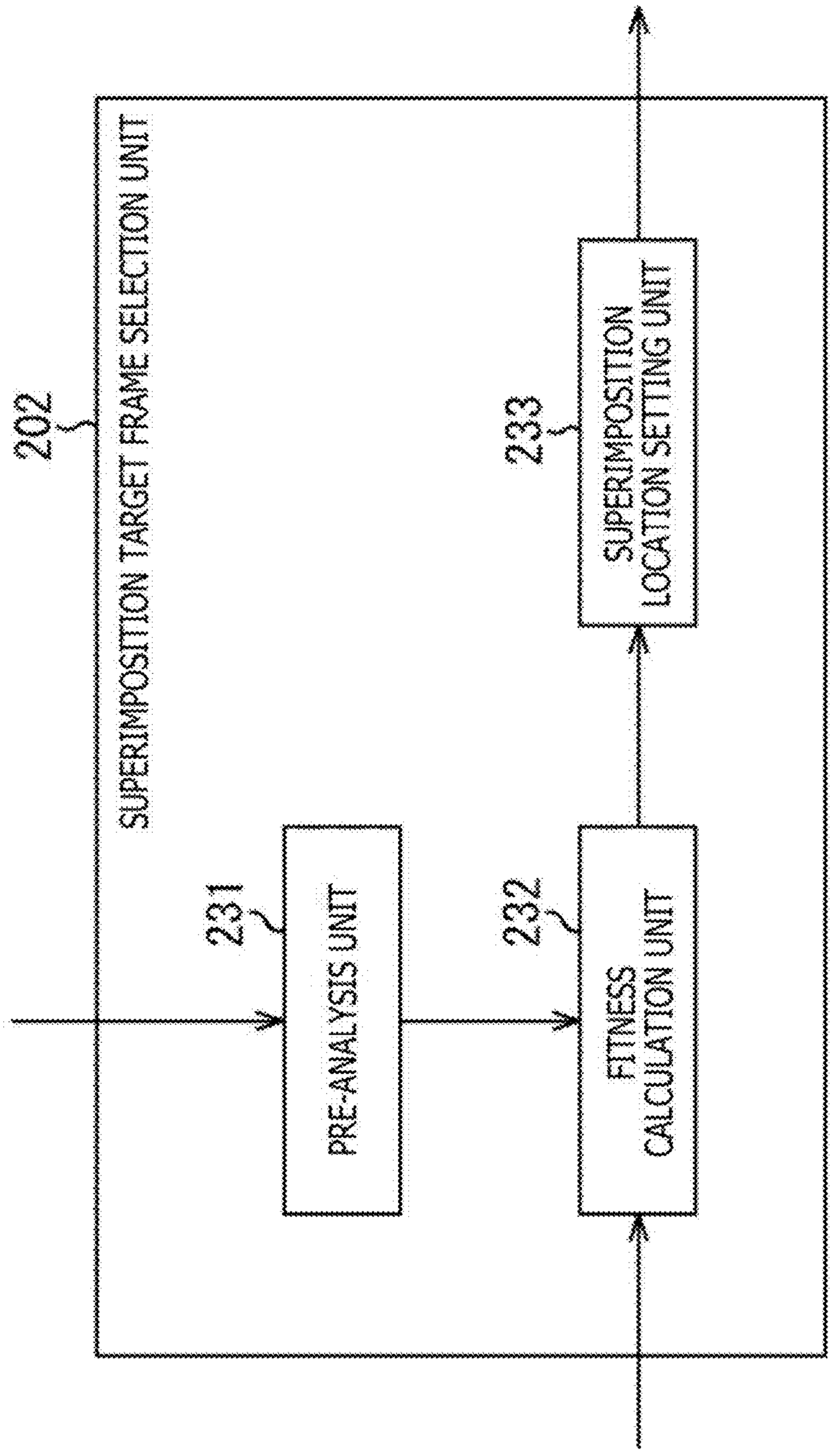
202
SUPERIMPOSITION TARGET FRAME SELECTION UNIT
231
PRE-ANALYSIS UNIT
232
FITNESS CALCULATION UNIT
233
SUPERIMPOSITION LOCATION SETTING UNIT

FIG. 28

FIG. 29

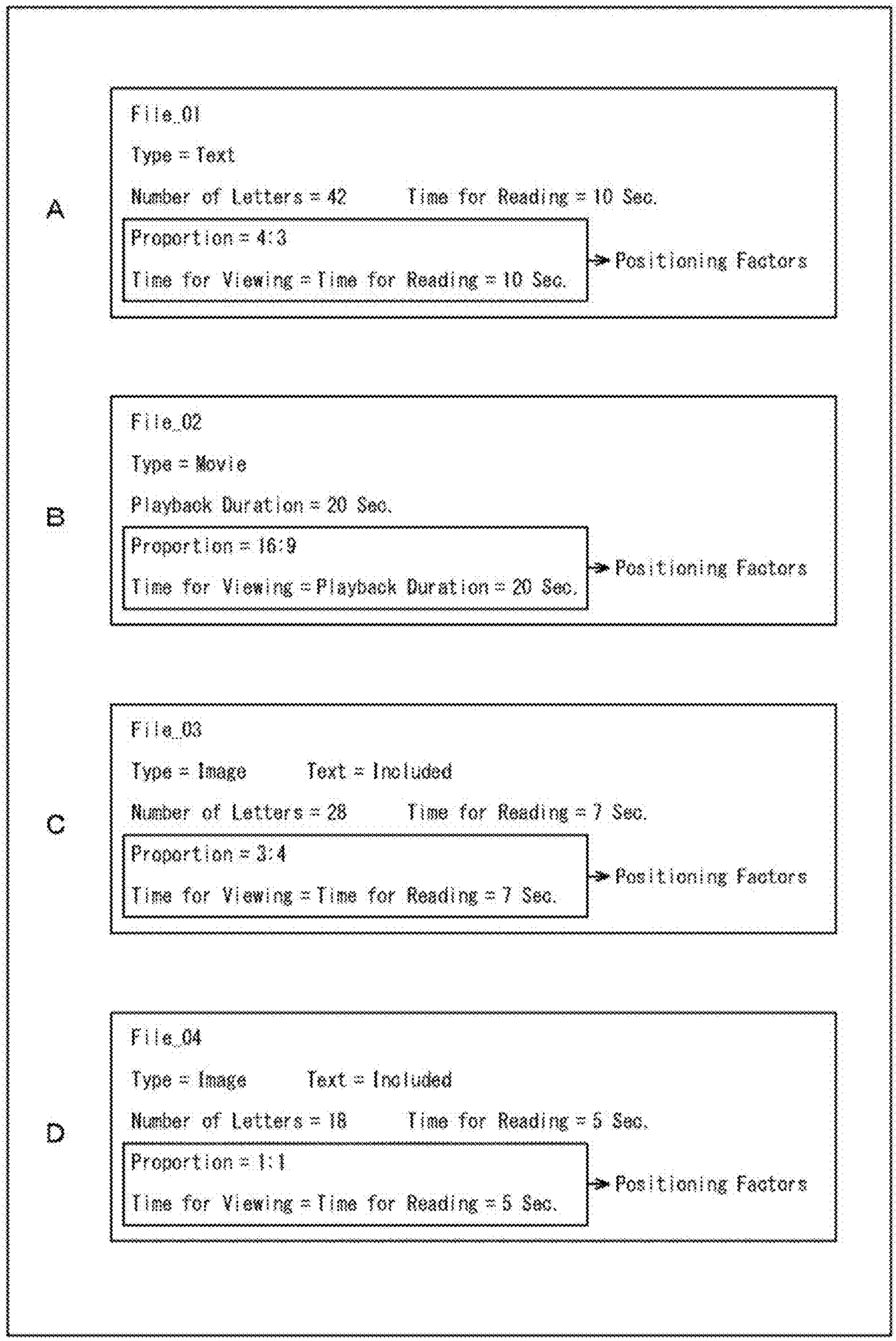
A
File_01
Type = Text
Number of Letters = 42
Time for Reading = 10 Sec.
Proportion = 4:3
Time for Viewing = Time for Reading = 10 Sec.
Positioning Factors
B
File_02
Type = Movie
Playback Duration = 20 Sec.
Proportion = 16:9
Time for Viewing = Playback Duration = 20 Sec.
Positioning Factors
C
File_03
Type = Image
Text = Included
Number of Letters = 28
Time for Reading = 7 Sec.
Proportion = 3:4
Time for Viewing = Time for Reading = 7 Sec.
Positioning Factors
D
File_04
Type = Image
Text = Included
Number of Letters = 18
Time for Reading = 5 Sec.
Proportion = 1:1
Time for Viewing = Time for Reading = 5 Sec.
Positioning Factors

FIG. 30

A

File_01 [Type = Text], [Proportion = 4:3], [Time for Viewing = 10 Sec.]

Frame_11[1:0.9] = 20, [4 Sec.] = 10 → Total:30

Frame_12[3:4.2] = 10, [7 Sec.] = 20 → Total:30

Frame_13[4:3.2] = 40, [14 Sec.] = 50 → Total:90

Frame_14[16: 8] = 30, [17 Sec.] = 40 → Total:70

B

File_02 [Type = Movie], [Proportion = 16:9], [Time for Viewing = 20 Sec.]

Frame_11[1:0.9] = 0, [4 Sec.] = 0 → Total:0

Frame_12[3:4.2] = 0, [7 Sec.] = 0 → Total:0

Frame_13[4:3.2] = 20, [14 Sec.] = 30 → Total:50

Frame_14[16:8] = 40, [17 Sec.] = 40 → Total:80

C

File_03 [Type = Image & Text], [Proportion = 3:4], [Time for Viewing = 7 Sec.]

Frame_11[1:0.9] = 20, [4 Sec.] = 20 → Total:30

Frame_12[3:4.2] = 40, [7 Sec.] = 50 → Total:90

Frame_13[4:3.2] = 10, [14 Sec.] = 50 → Total:60

Frame_14[16:8] = 0, [17 Sec.] = 50 → Total:50

D

File_04 [Type = Image & Text], [Proportion = 1:1], [Time for Viewing = 5 Sec.]

Frame_11[1:0.9] = 40, [4 Sec.] = 30 → Total:70

Frame_12[3:4.2] = 20, [7 Sec.] = 50 → Total:70

Frame_13[4:3.2] = 20, [14 Sec.] = 50 → Total:70

Frame_14[16:8] = 10, [17 Sec.] = 50 → Total:60

FIG. 31

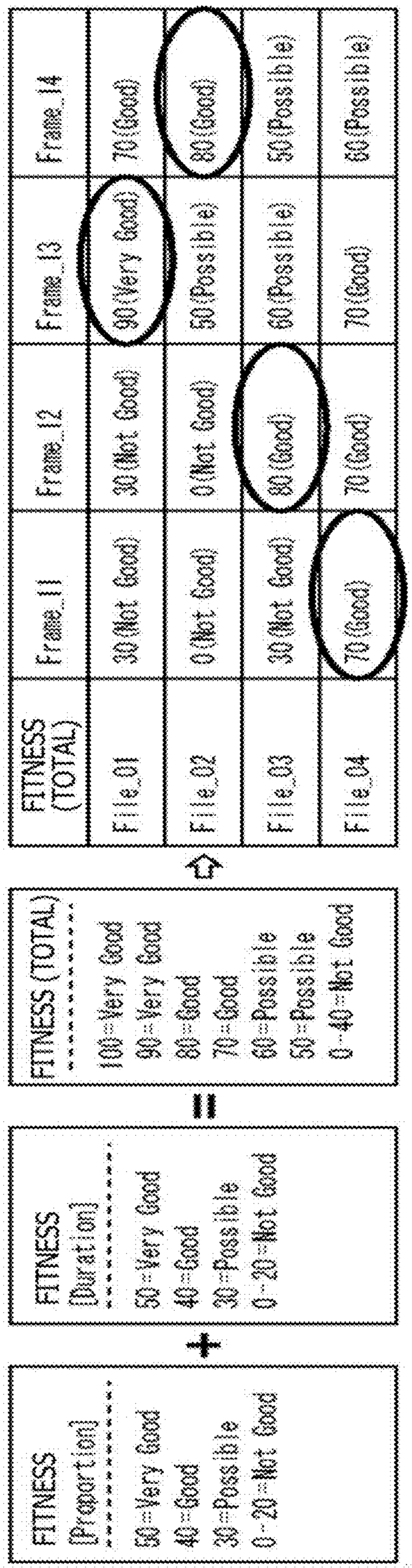
FITNESS
(Proportion)
50=Very Good
40=Good
30=Possible
0~20=Not Good
+
FITNESS
(Duration)
50=Very Good
40=Good
30=Possible
0~20=Not Good
=
FITNESS (TOTAL)
100=Very Good
90=Very Good
80=Good
70=Good
60=Possible
50=Possible
0~40=Not Good
FITNESS (TOTAL)
File_01
File_02
File_03
File_04
Frame_11
30 (Not Good)
0 (Not Good)
30 (Not Good)
70 (Good)
Frame_12
30 (Not Good)
0 (Not Good)
80 (Good)
70 (Good)
Frame_13
90 (Very Good)
50 (Possible)
60 (Possible)
70 (Good)
Frame_14
70 (Good)
80 (Good)
50 (Possible)
60 (Possible)

FIG. 32

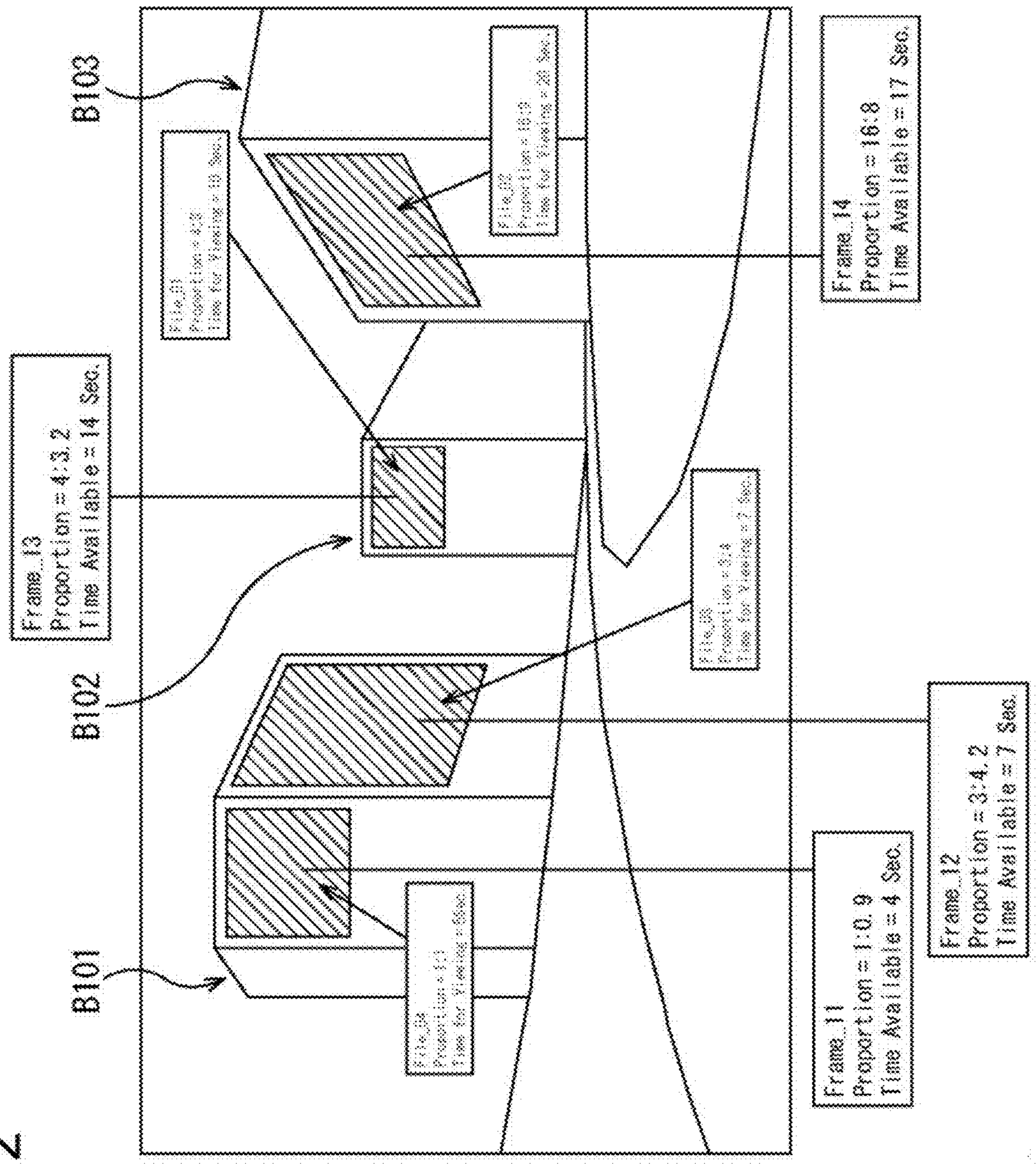
B101
B102
B103
Frame_11
Proportion = 1:0.9
Time Available = 4 Sec.
Frame_12
Proportion = 3:4.2
Time Available = 7 Sec.
Frame_13
Proportion = 4:3.2
Time Available = 14 Sec.
Frame_14
Proportion = 16:8
Time Available = 17 Sec.

FIG. 33

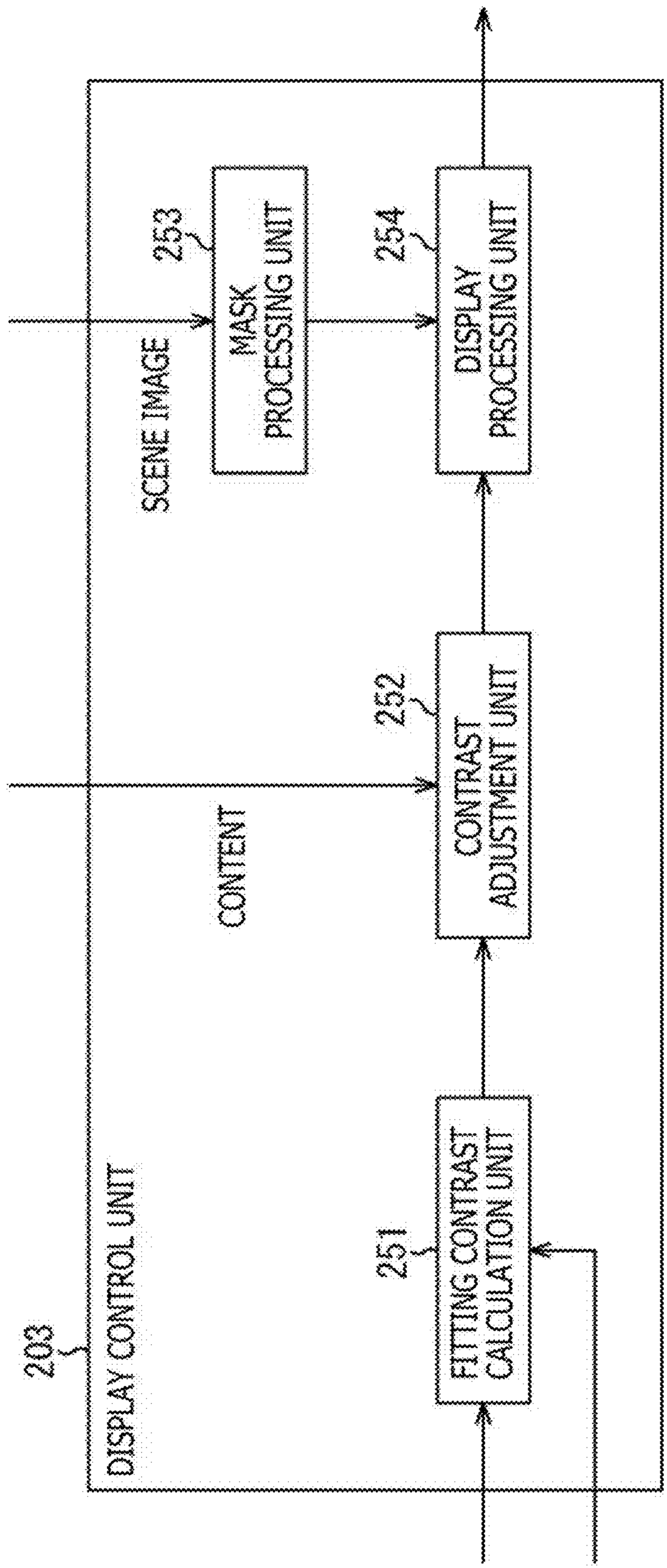
203
DISPLAY CONTROL UNIT
SCENE IMAGE
CONTENT
253
MASK PROCESSING UNIT
254
DISPLAY PROCESSING UNIT
252
CONTRAST ADJUSTMENT UNIT
251
FITTING CONTRAST CALCULATION UNIT

FIG. 34

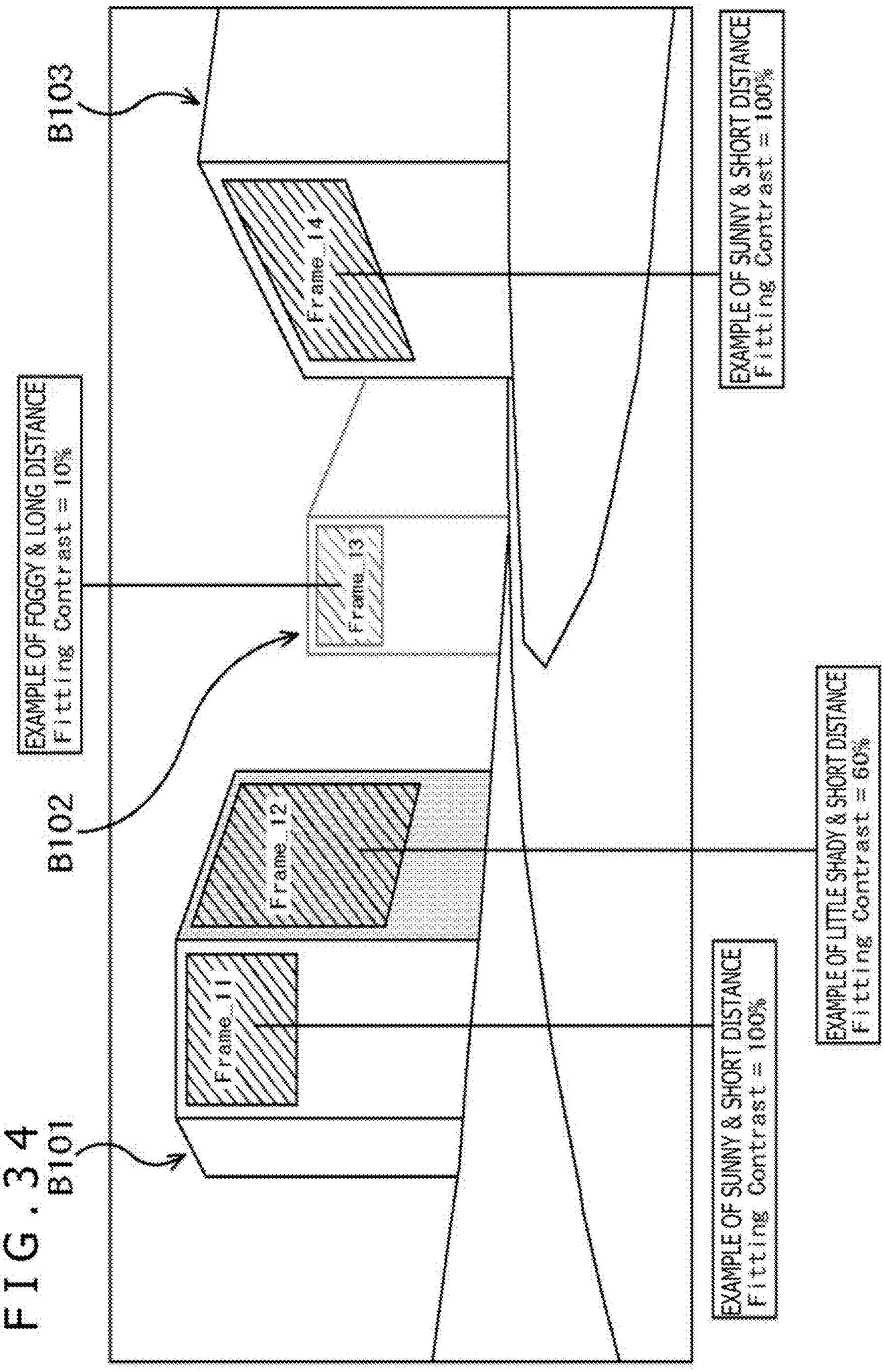
B101
B102
B103
Frame_11
Frame_12
Frame_13
Frame_14
EXAMPLE OF SUNNY & SHORT DISTANCE
Fitting Contrast = 100%
EXAMPLE OF FOGGY & LONG DISTANCE
Fitting Contrast = 10%
EXAMPLE OF LITTLE SHADY & SHORT DISTANCE
Fitting Contrast = 60%
EXAMPLE OF SUNNY & SHORT DISTANCE
Fitting Contrast = 100%

FIG. 35

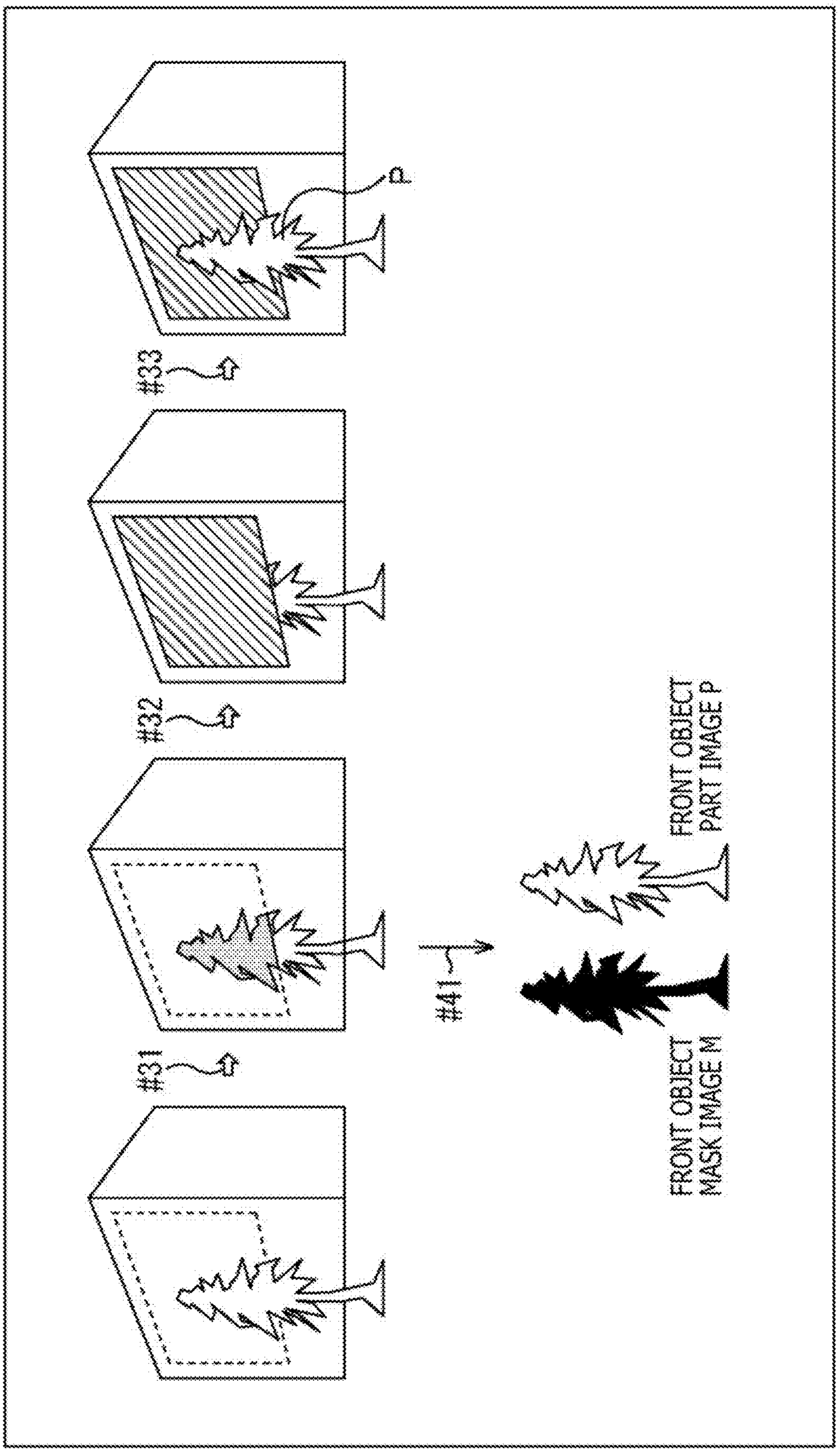
#31
#32
#33
a
#41
FRONT OBJECT
MASK IMAGE M
FRONT OBJECT
PART IMAGE P

FIG.36

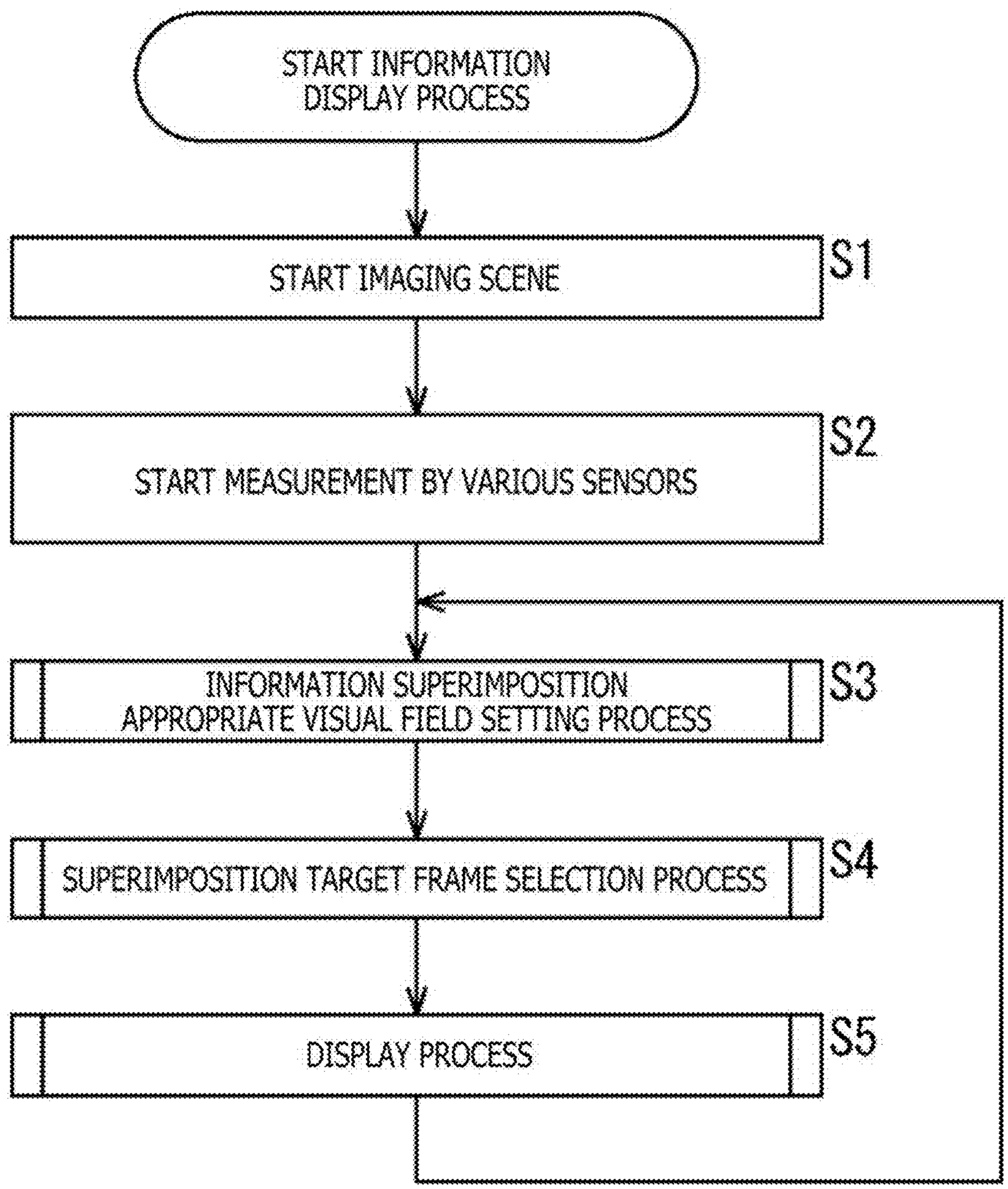
START INFORMATION DISPLAY PROCESS
START IMAGING SCENE
S1
START MEASUREMENT BY VARIOUS SENSORS
S2
INFORMATION SUPERIMPOSITION APPROPRIATE VISUAL FIELD SETTING PROCESS
S3
SUPERIMPOSITION TARGET FRAME SELECTION PROCESS
S4
DISPLAY PROCESS
S5

FIG. 37

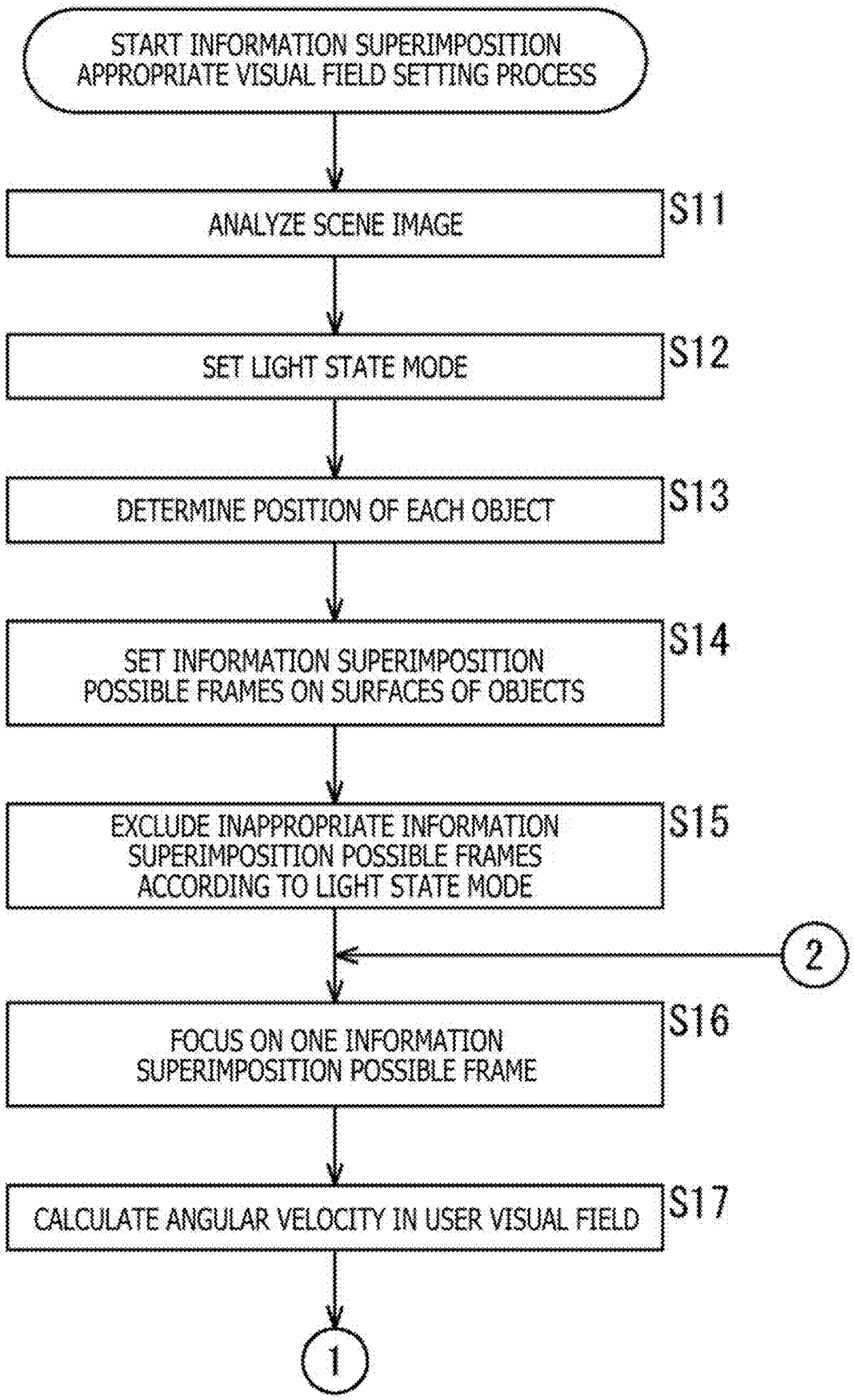
START INFORMATION SUPERIMPOSITION APPROPRIATE VISUAL FIELD SETTING PROCESS
ANALYZE SCENE IMAGE
S11
SET LIGHT STATE MODE
S12
DETERMINE POSITION OF EACH OBJECT
S13
SET INFORMATION SUPERIMPOSITION POSSIBLE FRAMES ON SURFACES OF OBJECTS
S14
EXCLUDE INAPPROPRIATE INFORMATION SUPERIMPOSITION POSSIBLE FRAMES ACCORDING TO LIGHT STATE MODE
S15
2
FOCUS ON ONE INFORMATION SUPERIMPOSITION POSSIBLE FRAME
S16
CALCULATE ANGULAR VELOCITY IN USER VISUAL FIELD
S17
1

FIG. 38

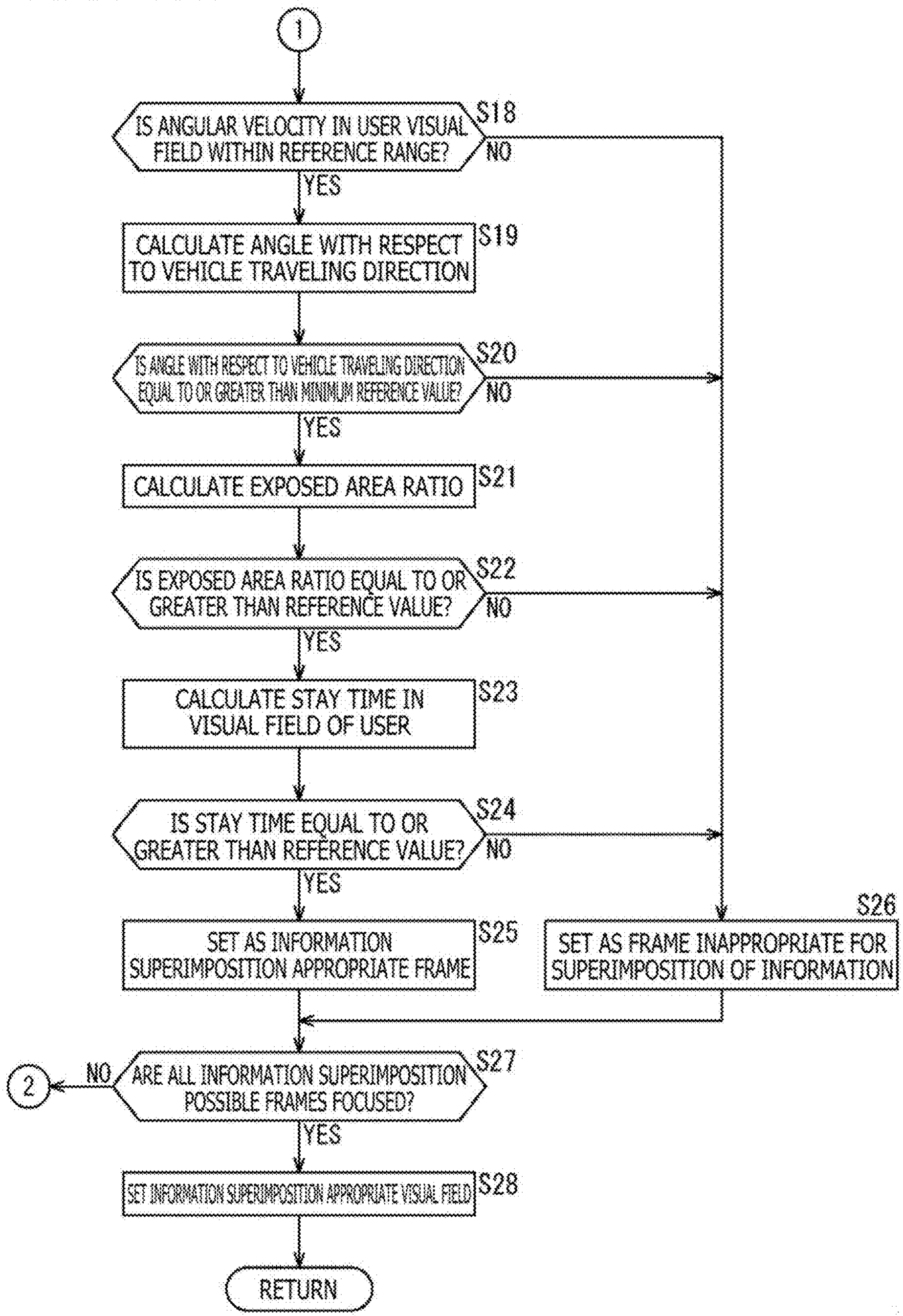
1
IS ANGULAR VELOCITY IN USER VISUAL FIELD WITHIN REFERENCE RANGE?
S18
NO
YES
CALCULATE ANGLE WITH RESPECT TO VEHICLE TRAVELING DIRECTION
S19
IS ANGLE WITH RESPECT TO VEHICLE TRAVELING DIRECTION EQUAL TO OR GREATER THAN MINIMUM REFERENCE VALUE?
S20
NO
YES
CALCULATE EXPOSED AREA RATIO
S21
IS EXPOSED AREA RATIO EQUAL TO OR GREATER THAN REFERENCE VALUE?
S22
NO
YES
CALCULATE STAY TIME IN VISUAL FIELD OF USER
S23
IS STAY TIME EQUAL TO OR GREATER THAN REFERENCE VALUE?
S24
NO
YES
SET AS INFORMATION SUPERIMPOSITION APPROPRIATE FRAME
S25
SET AS FRAME INAPPROPRIATE FOR SUPERIMPOSITION OF INFORMATION
S26
2
NO
ARE ALL INFORMATION SUPERIMPOSITION POSSIBLE FRAMES FOCUSED?
S27
YES
SET INFORMATION SUPERIMPOSITION APPROPRIATE VISUAL FIELD
S28
RETURN

FIG.39

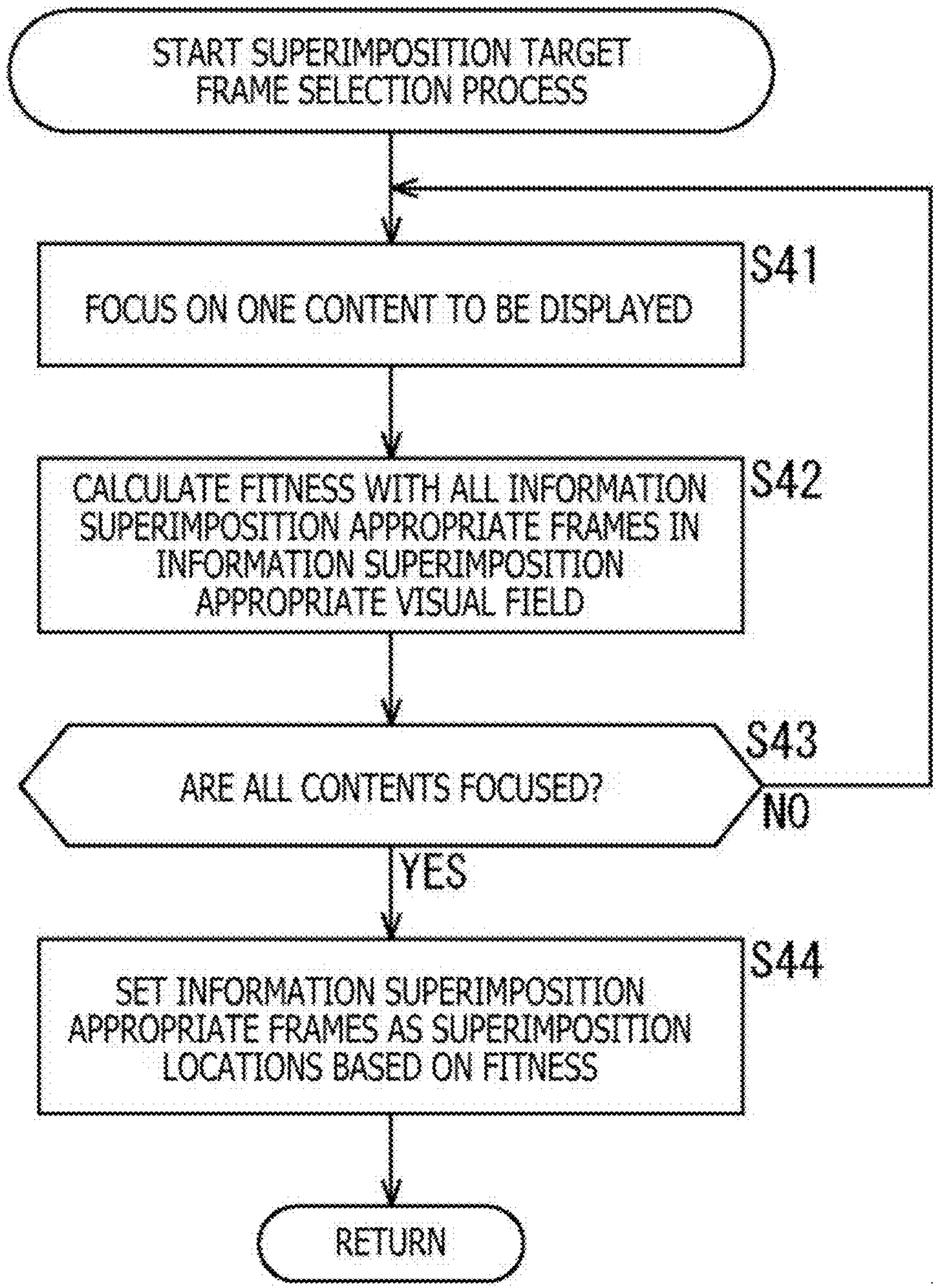
START SUPERIMPOSITION TARGET FRAME SELECTION PROCESS
FOCUS ON ONE CONTENT TO BE DISPLAYED
S41
CALCULATE FITNESS WITH ALL INFORMATION SUPERIMPOSITION APPROPRIATE FRAMES IN INFORMATION SUPERIMPOSITION APPROPRIATE VISUAL FIELD
S42
ARE ALL CONTENTS FOCUSED?
S43
NO
YES
SET INFORMATION SUPERIMPOSITION APPROPRIATE FRAMES AS SUPERIMPOSITION LOCATIONS BASED ON FITNESS
S44
RETURN

FIG.40

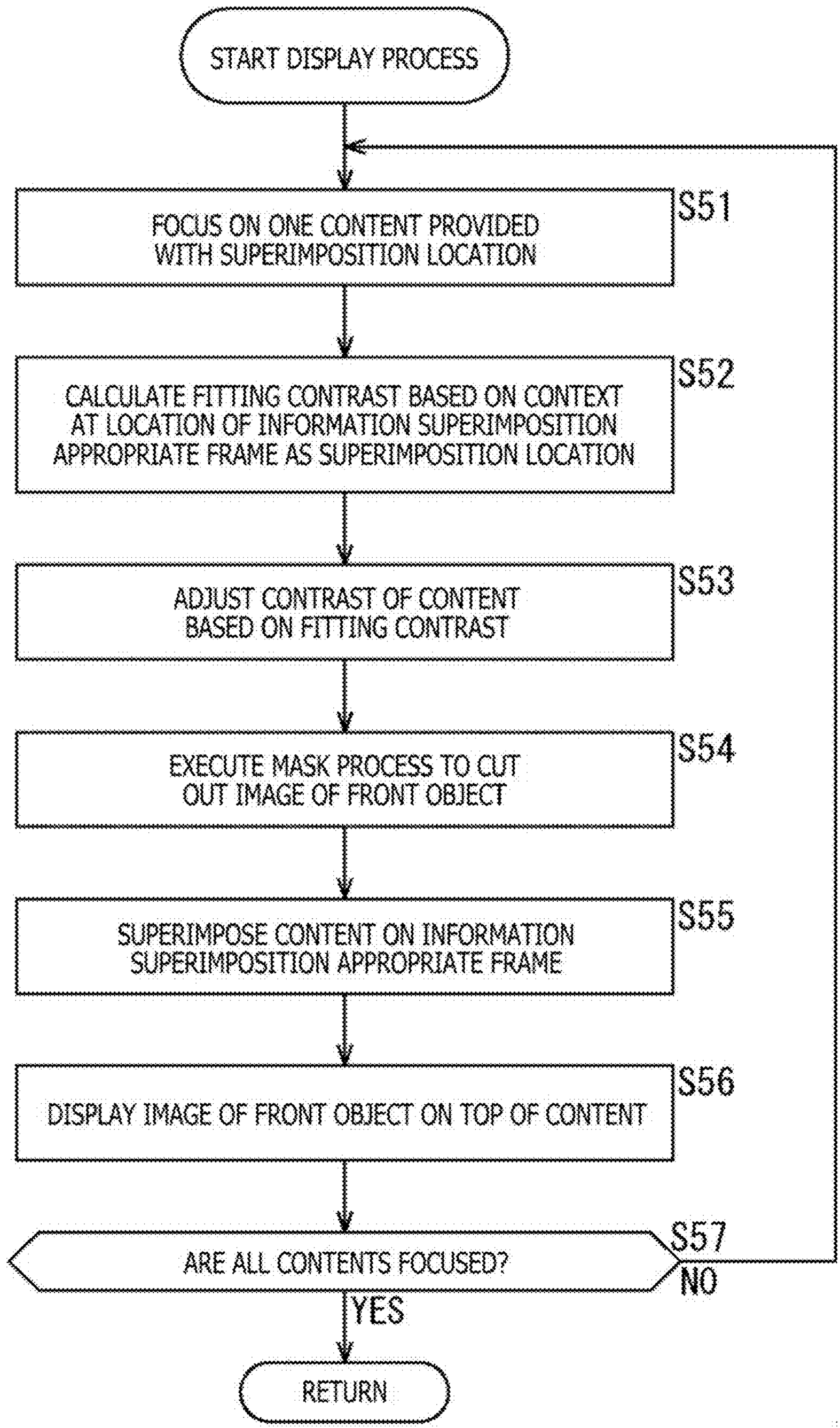
START DISPLAY PROCESS
FOCUS ON ONE CONTENT PROVIDED WITH SUPERIMPOSITION LOCATION
S51
CALCULATE FITTING CONTRAST BASED ON CONTEXT AT LOCATION OF INFORMATION SUPERIMPOSITION APPROPRIATE FRAME AS SUPERIMPOSITION LOCATION
S52
ADJUST CONTRAST OF CONTENT BASED ON FITTING CONTRAST
S53
EXECUTE MASK PROCESS TO CUT OUT IMAGE OF FRONT OBJECT
S54
SUPERIMPOSE CONTENT ON INFORMATION SUPERIMPOSITION APPROPRIATE FRAME
S55
DISPLAY IMAGE OF FRONT OBJECT ON TOP OF CONTENT
S56
ARE ALL CONTENTS FOCUSED?
S57
NO
YES
RETURN

FIG. 41

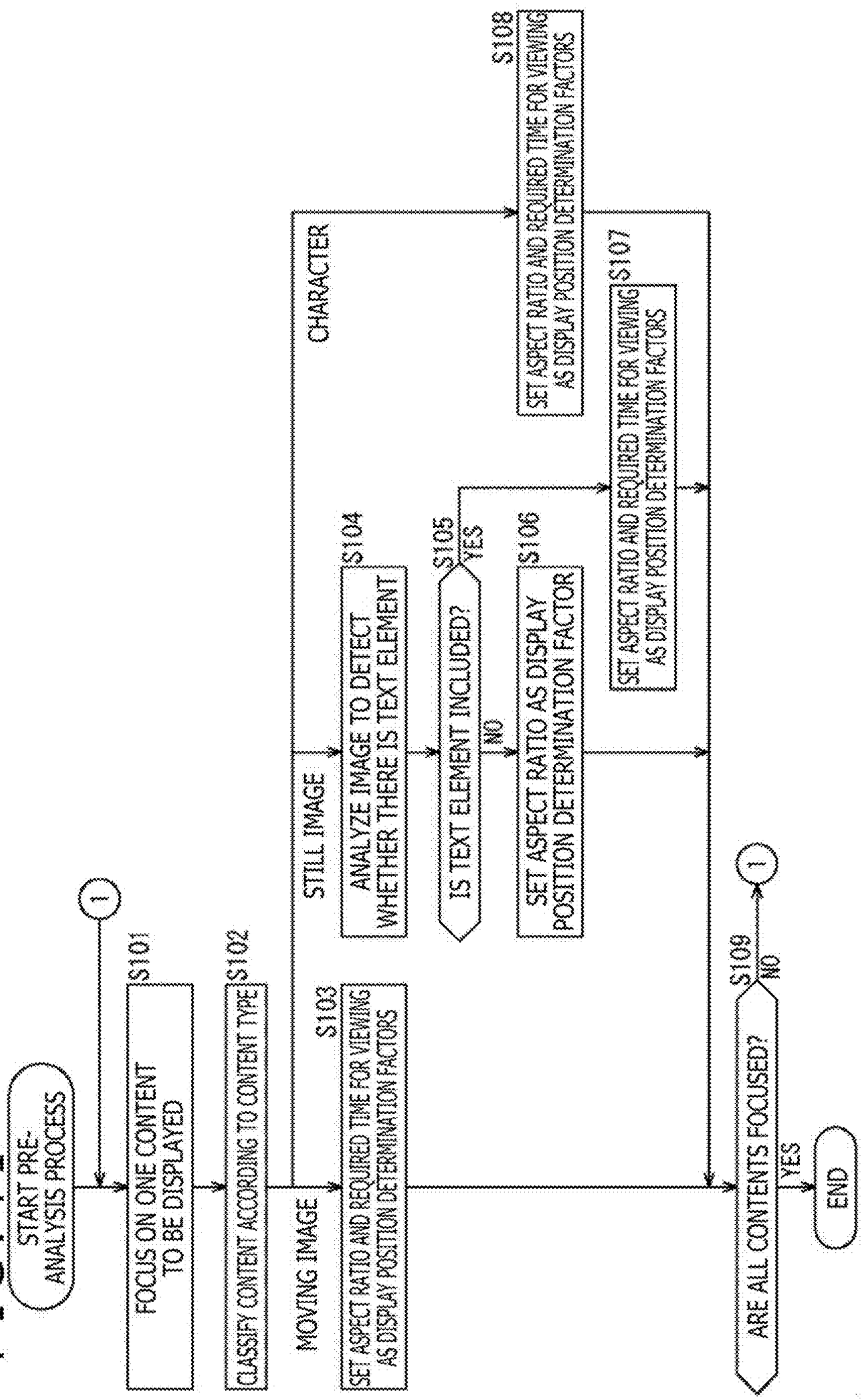
START PRE-ANALYSIS PROCESS
1
S101
FOCUS ON ONE CONTENT TO BE DISPLAYED
S102
CLASSIFY CONTENT ACCORDING TO CONTENT TYPE
CHARACTER
STILL IMAGE
MOVING IMAGE
S103
SET ASPECT RATIO AND REQUIRED TIME FOR VIEWING AS DISPLAY POSITION DETERMINATION FACTOR
S104
ANALYZE IMAGE TO DETECT WHETHER THERE IS TEXT ELEMENT
S105
IS TEXT ELEMENT INCLUDED?
YES
NO
S106
SET ASPECT RATIO AS DISPLAY POSITION DETERMINATION FACTOR
S107
SET ASPECT RATIO AND REQUIRED TIME FOR VIEWING AS DISPLAY POSITION DETERMINATION FACTORS
S108
SET ASPECT RATIO AND REQUIRED TIME FOR VIEWING AS DISPLAY POSITION DETERMINATION FACTORS
S109
ARE ALL CONTENTS FOCUSED?
NO
YES
1
END

FIG. 42

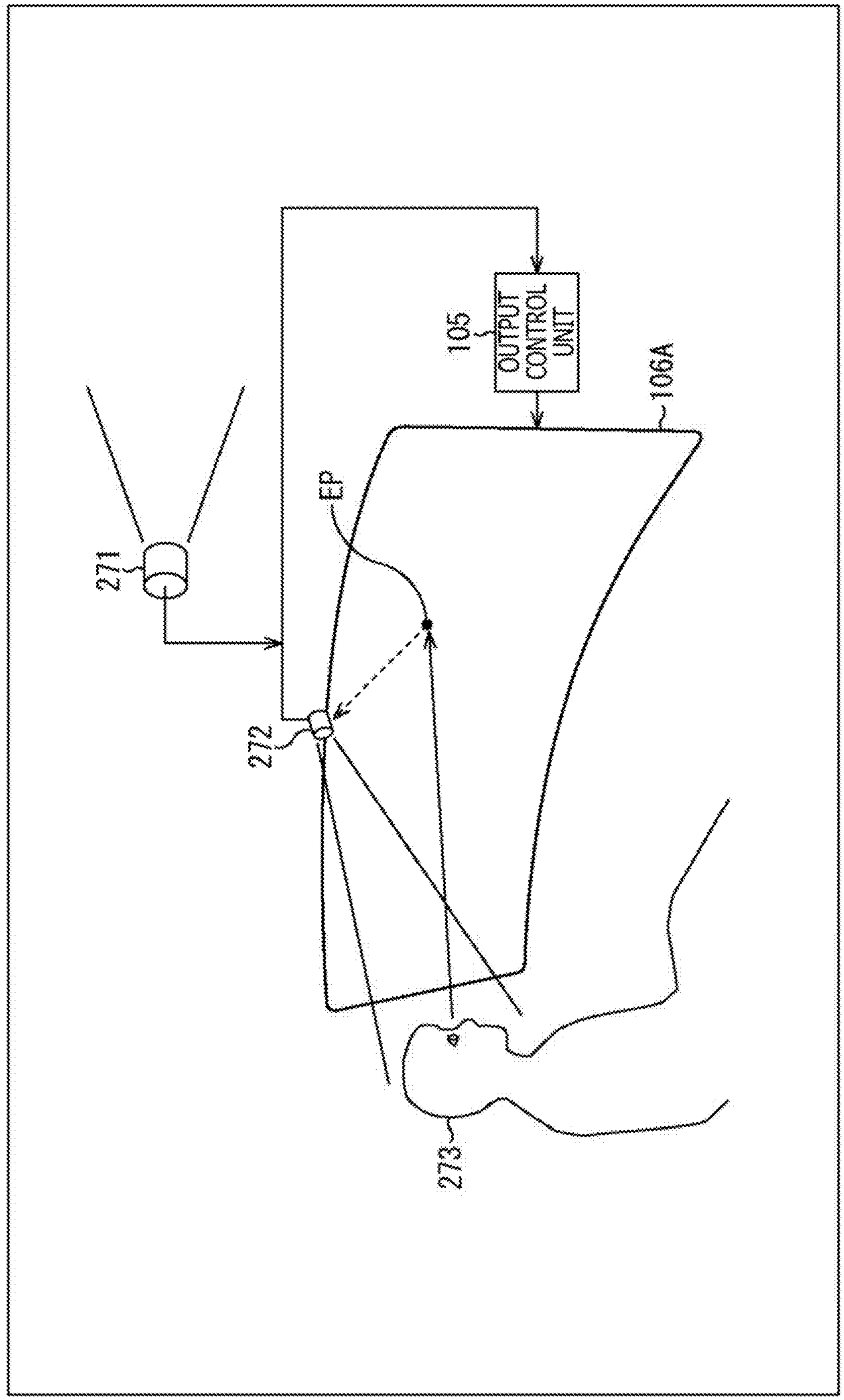

FIG. 43

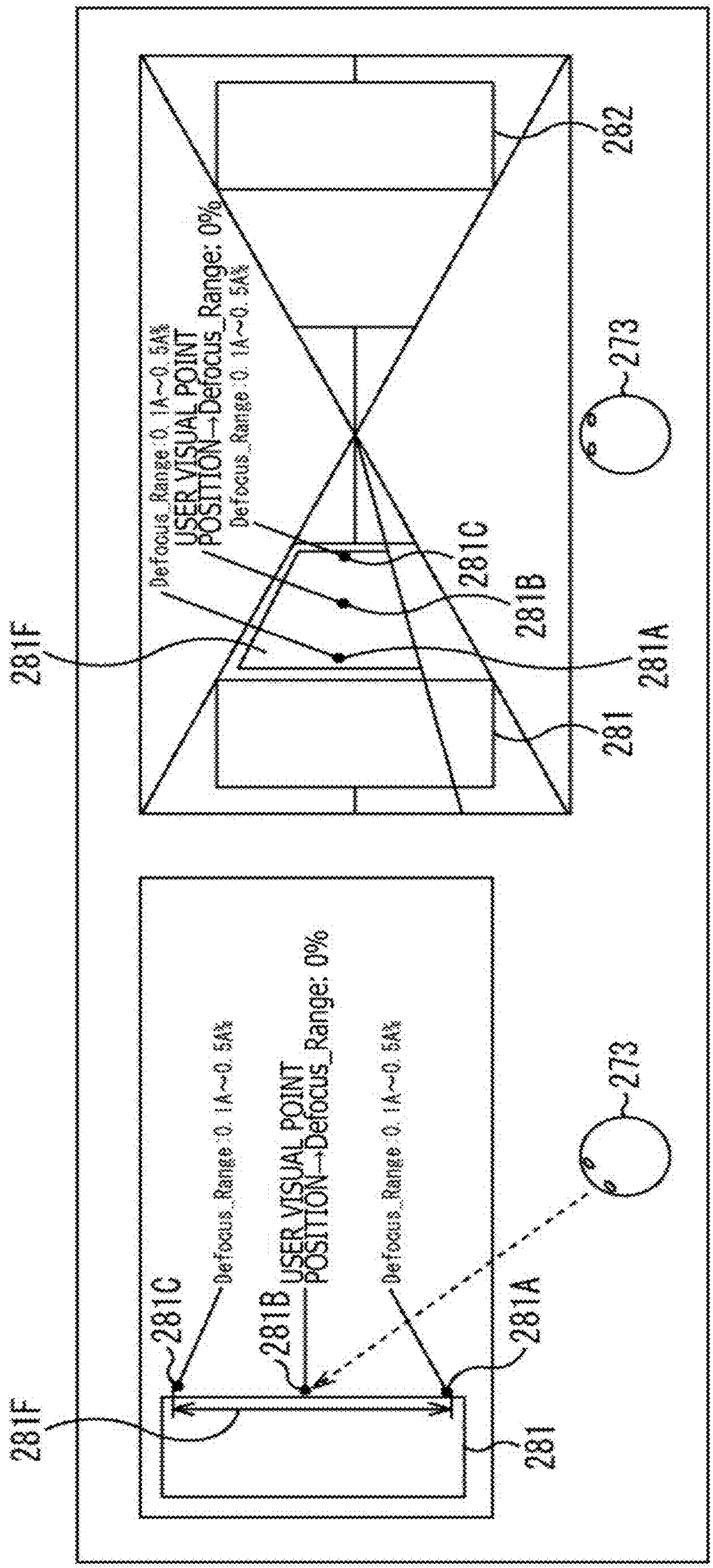
281F
281C
Defocus_Range: 0.1A~0.5A%
281B
USER VISUAL POINT POSITION→Defocus_Range: 0%
Defocus_Range: 0.1A~0.5A%
281A
281
273
282
281F
Defocus_Range: 0.1A~0.5A%
USER VISUAL POINT POSITION→Defocus_Range: 0%
Defocus_Range: 0.1A~0.5A%
281C
281B
281A
281
273

FIG. 44

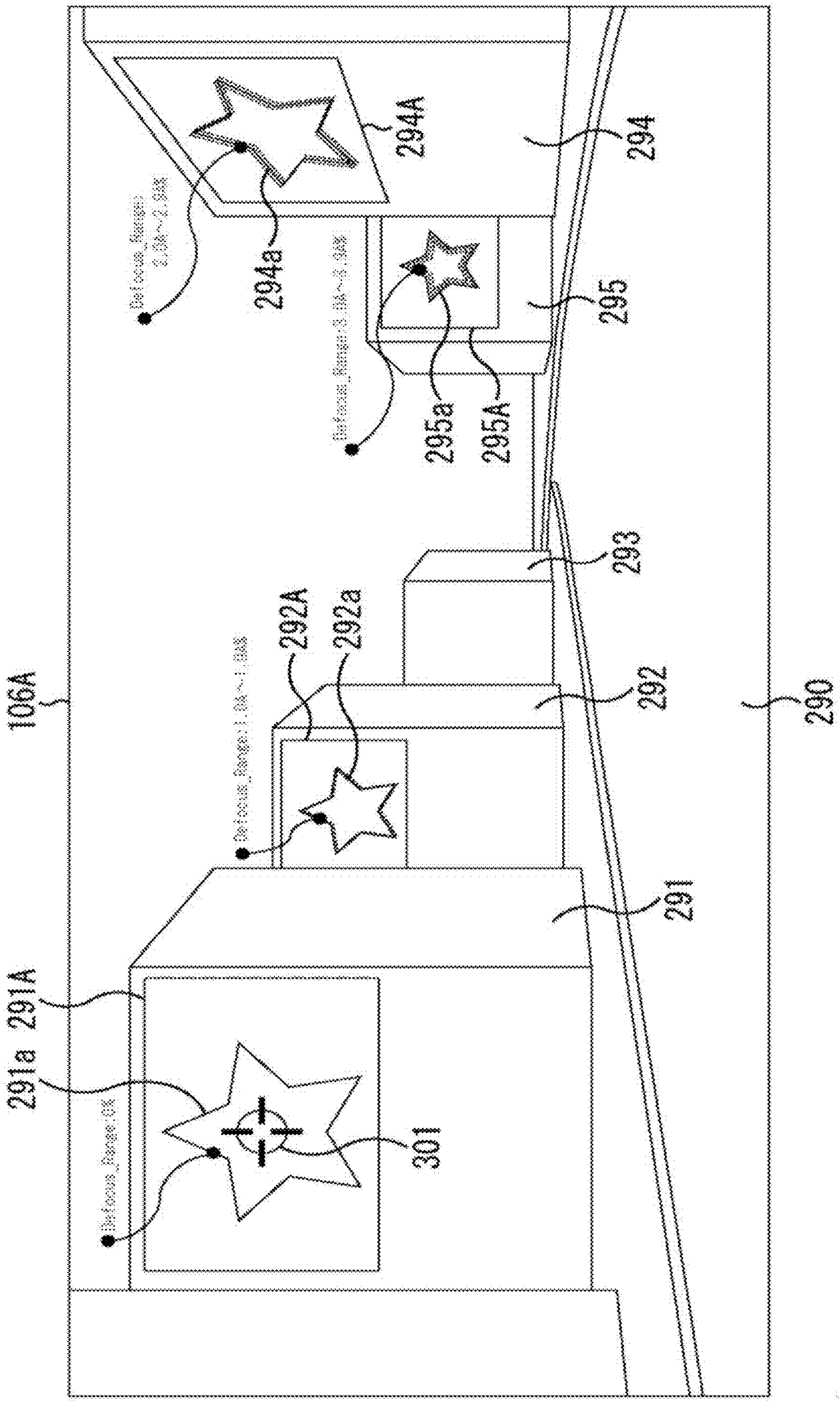
106A
291a
291A
301
292A
292a
292
293
295a
295A
295
294a
294A
294
290
291

FIG. 45

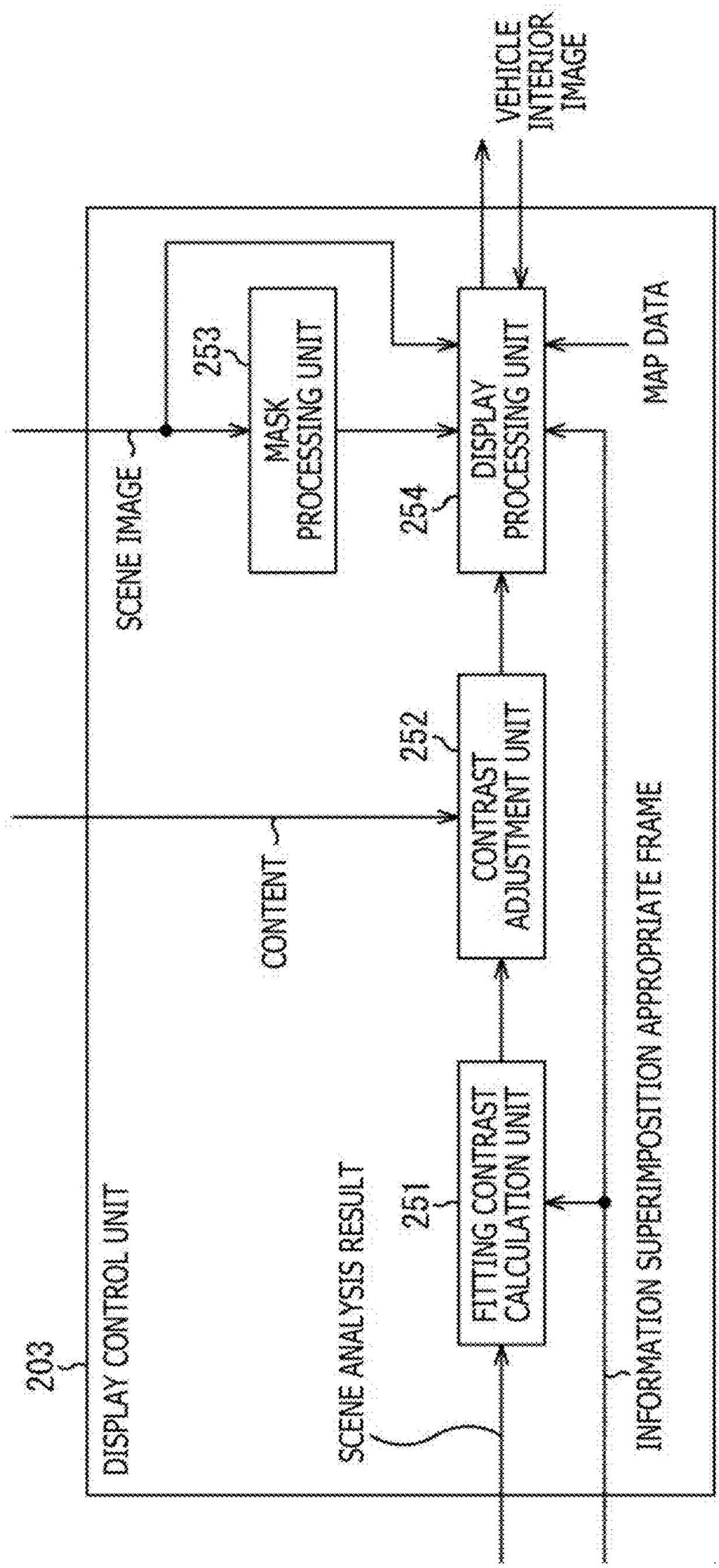
203
DISPLAY CONTROL UNIT
SCENE IMAGE
253
MASK PROCESSING UNIT
VEHICLE INTERIOR IMAGE
254
DISPLAY PROCESSING UNIT
MAP DATA
CONTENT
252
CONTRAST ADJUSTMENT UNIT
SCENE ANALYSIS RESULT
251
FITTING CONTRAST CALCULATION UNIT
INFORMATION SUPERIMPOSITION APPROPRIATE FRAME

FIG. 46

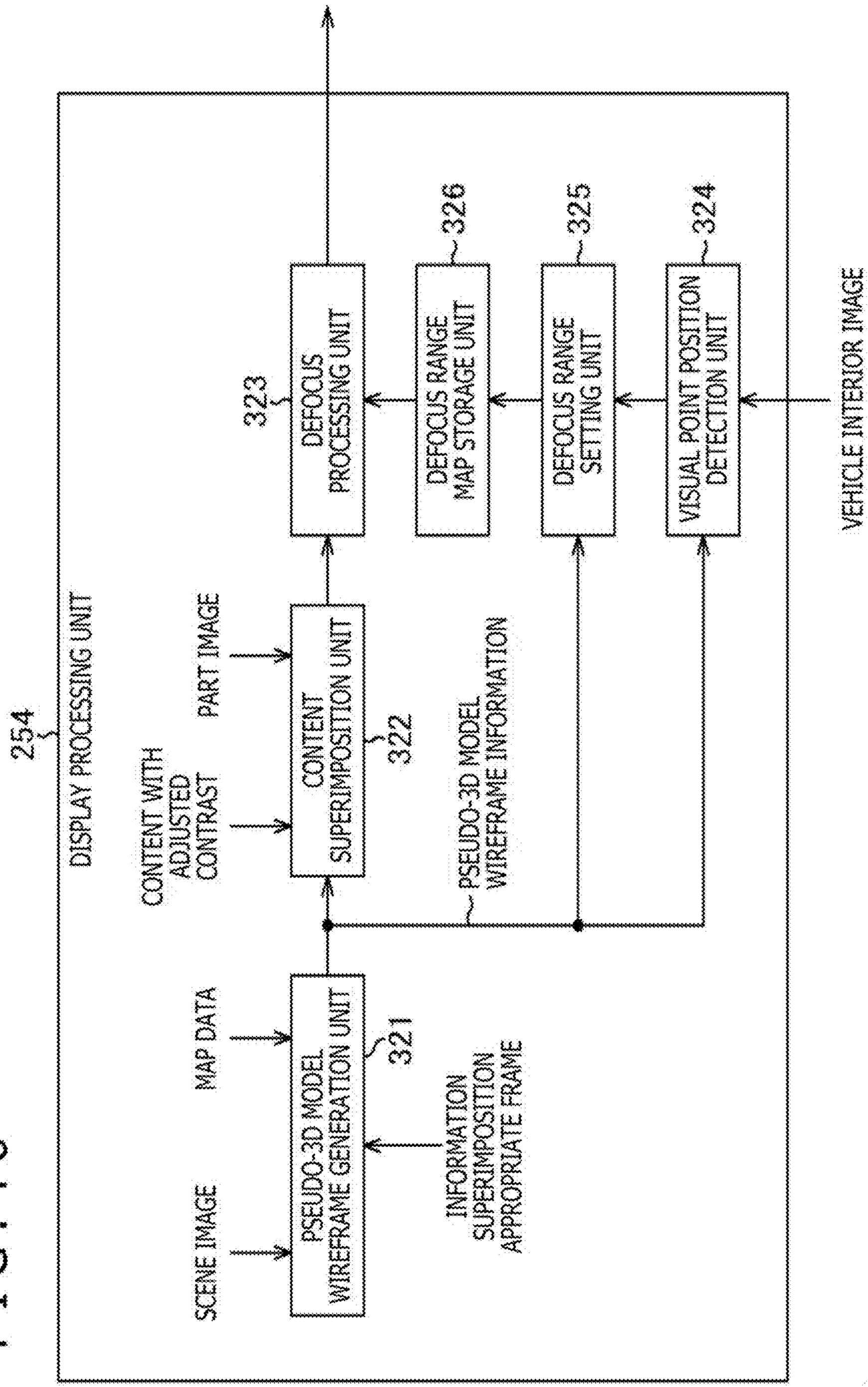
254
DISPLAY PROCESSING UNIT
SCENE IMAGE
MAP DATA
PSEUDO-3D MODEL WIREFRAME GENERATION UNIT
321
INFORMATION SUPERIMPOSITION APPROPRIATE FRAME
CONTENT WITH ADJUSTED CONTRAST
PART IMAGE
CONTENT SUPERIMPOSITION UNIT
322
PSEUDO-3D MODEL WIREFRAME INFORMATION
323
DEFOCUS PROCESSING UNIT
326
DEFOCUS RANGE MAP STORAGE UNIT
325
DEFOCUS RANGE SETTING UNIT
324
VISUAL POINT POSITION DETECTION UNIT
VEHICLE INTERIOR IMAGE

FIG.47

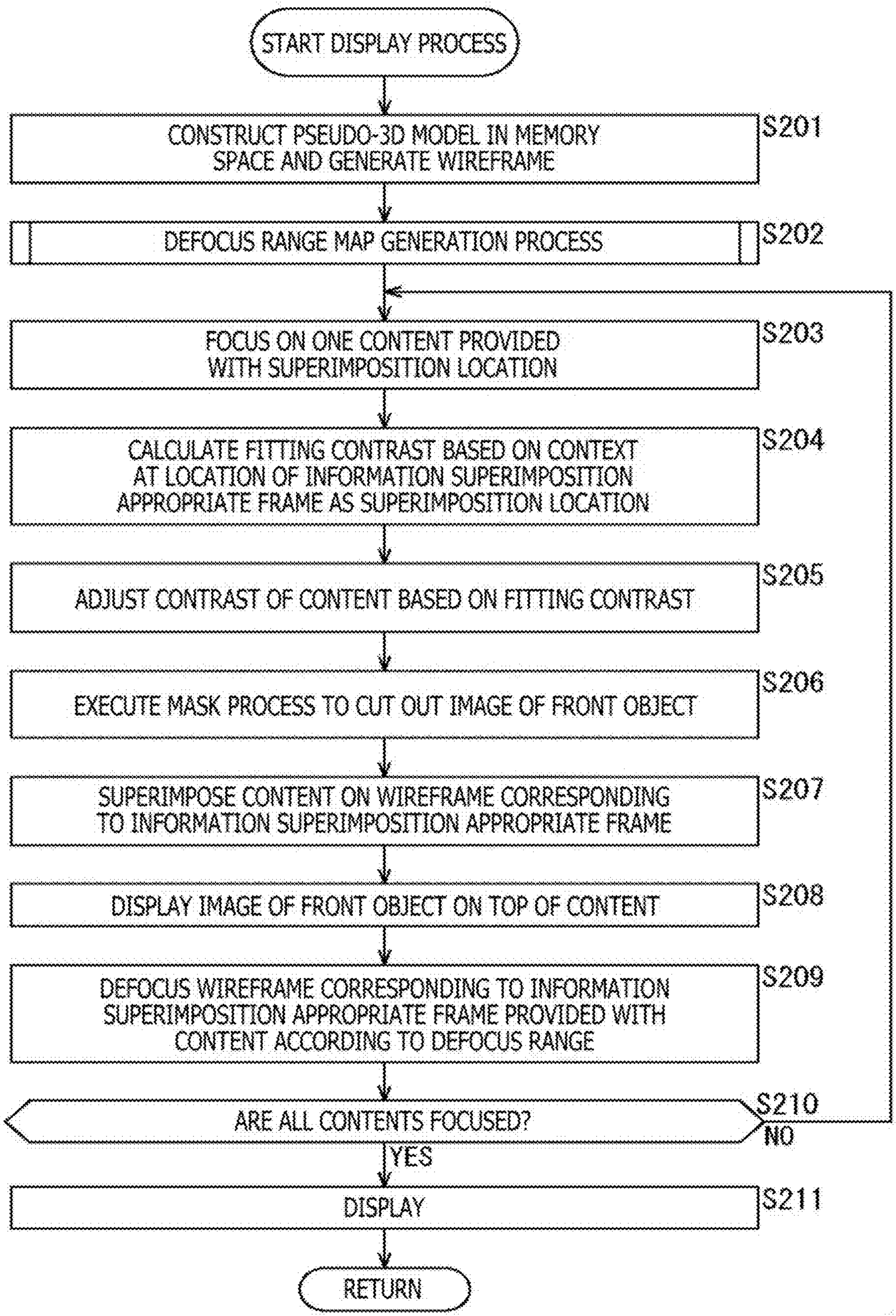
START DISPLAY PROCESS
CONSTRUCT PSEUDO-3D MODEL IN MEMORY SPACE AND GENERATE WIREFRAME
S201
DEFOCUS RANGE MAP GENERATION PROCESS
S202
FOCUS ON ONE CONTENT PROVIDED WITH SUPERIMPOSITION LOCATION
S203
CALCULATE FITTING CONTRAST BASED ON CONTEXT AT LOCATION OF INFORMATION SUPERIMPOSITION APPROPRIATE FRAME AS SUPERIMPOSITION LOCATION
S204
ADJUST CONTRAST OF CONTENT BASED ON FITTING CONTRAST
S205
EXECUTE MASK PROCESS TO CUT OUT IMAGE OF FRONT OBJECT
S206
SUPERIMPOSE CONTENT ON WIREFRAME CORRESPONDING TO INFORMATION SUPERIMPOSITION APPROPRIATE FRAME
S207
DISPLAY IMAGE OF FRONT OBJECT ON TOP OF CONTENT
S208
DEFOCUS WIREFRAME CORRESPONDING TO INFORMATION SUPERIMPOSITION APPROPRIATE FRAME PROVIDED WITH CONTENT ACCORDING TO DEFOCUS RANGE
S209
ARE ALL CONTENTS FOCUSED?
S210
NO
YES
DISPLAY
S211
RETURN

FIG.48

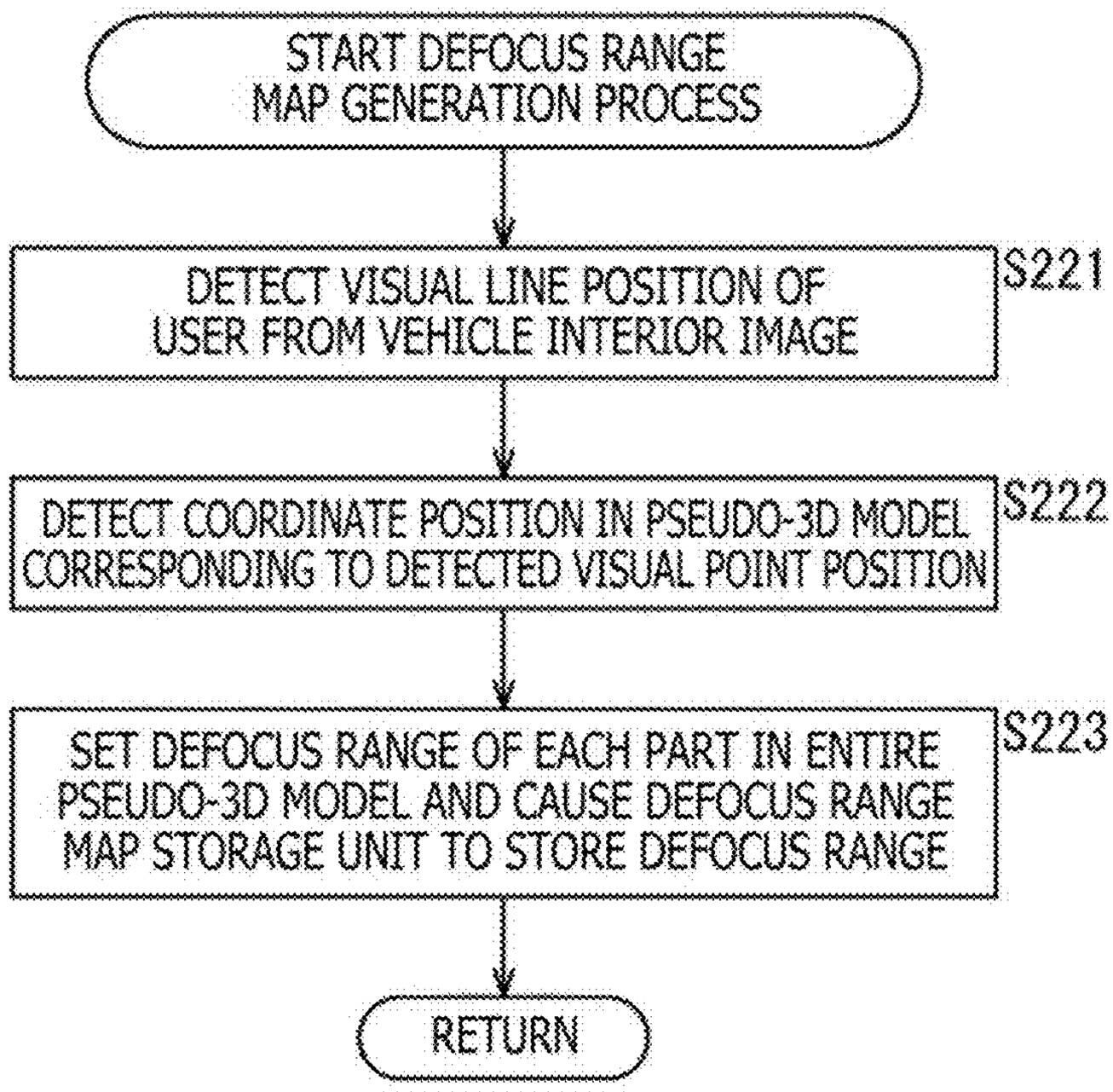
START DEFOCUS RANGE MAP GENERATION PROCESS
DETECT VISUAL LINE POSITION OF USER FROM VEHICLE INTERIOR IMAGE
S221
DETECT COORDINATE POSITION IN PSEUDO-3D MODEL CORRESPONDING TO DETECTED VISUAL POINT POSITION
S222
SET DEFOCUS RANGE OF EACH PART IN ENTIRE PSEUDO-3D MODEL AND CAUSE DEFOCUS RANGE MAP STORAGE UNIT TO STORE DEFOCUS RANGE
S223
RETURN

FIG. 49

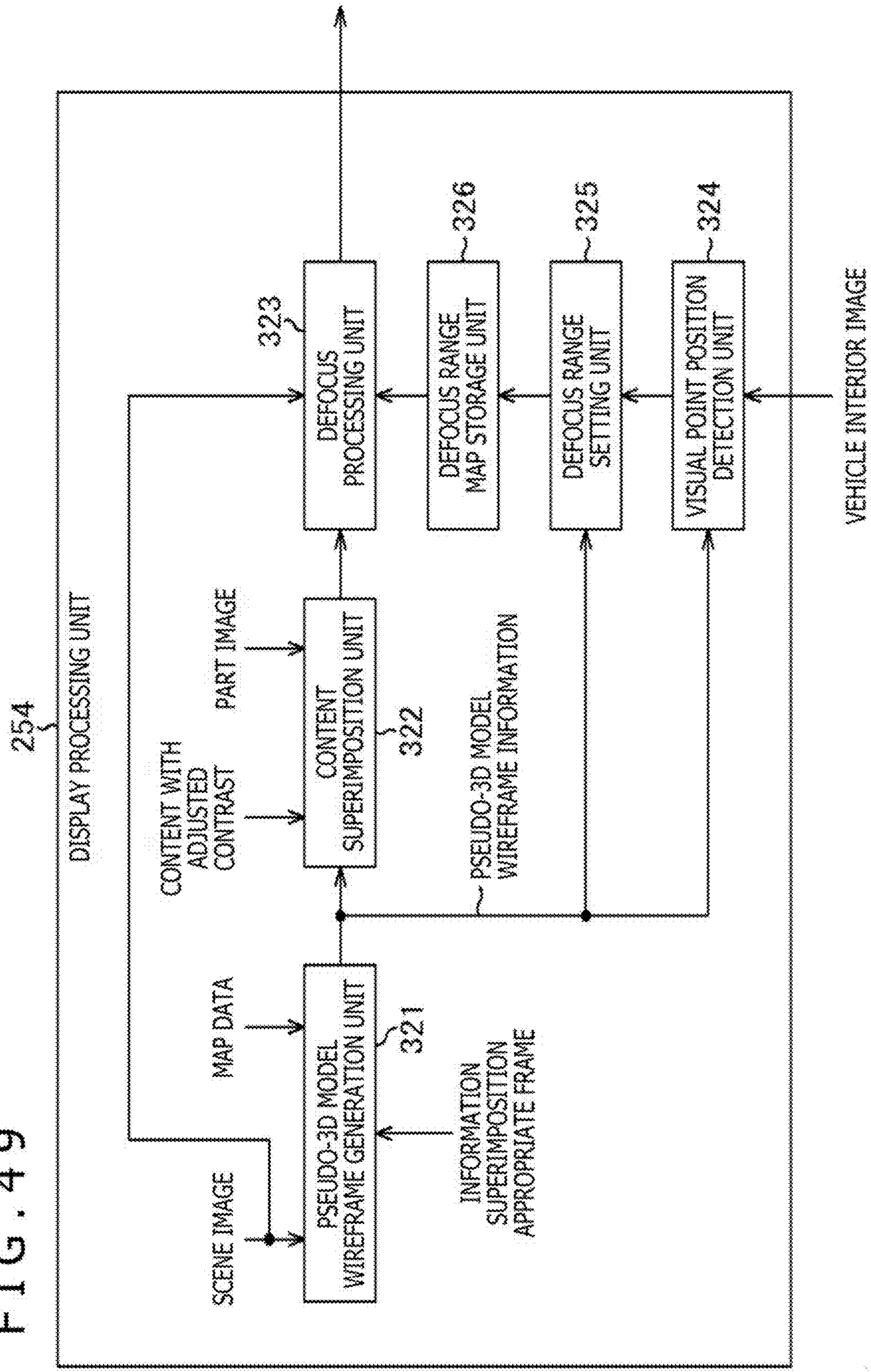
254
DISPLAY PROCESSING UNIT
SCENE IMAGE
MAP DATA
PSEUDO-3D MODEL WIREFRAME GENERATION UNIT
321
INFORMATION SUPERIMPOSITION APPROPRIATE FRAME
CONTENT WITH ADJUSTED CONTRAST
PART IMAGE
CONTENT SUPERIMPOSITION UNIT
322
PSEUDO-3D MODEL WIREFRAME INFORMATION
DEFOCUS PROCESSING UNIT
323
DEFOCUS RANGE MAP STORAGE UNIT
326
DEFOCUS RANGE SETTING UNIT
325
VISUAL POINT POSITION DETECTION UNIT
324
VEHICLE INTERIOR IMAGE

FIG. 50

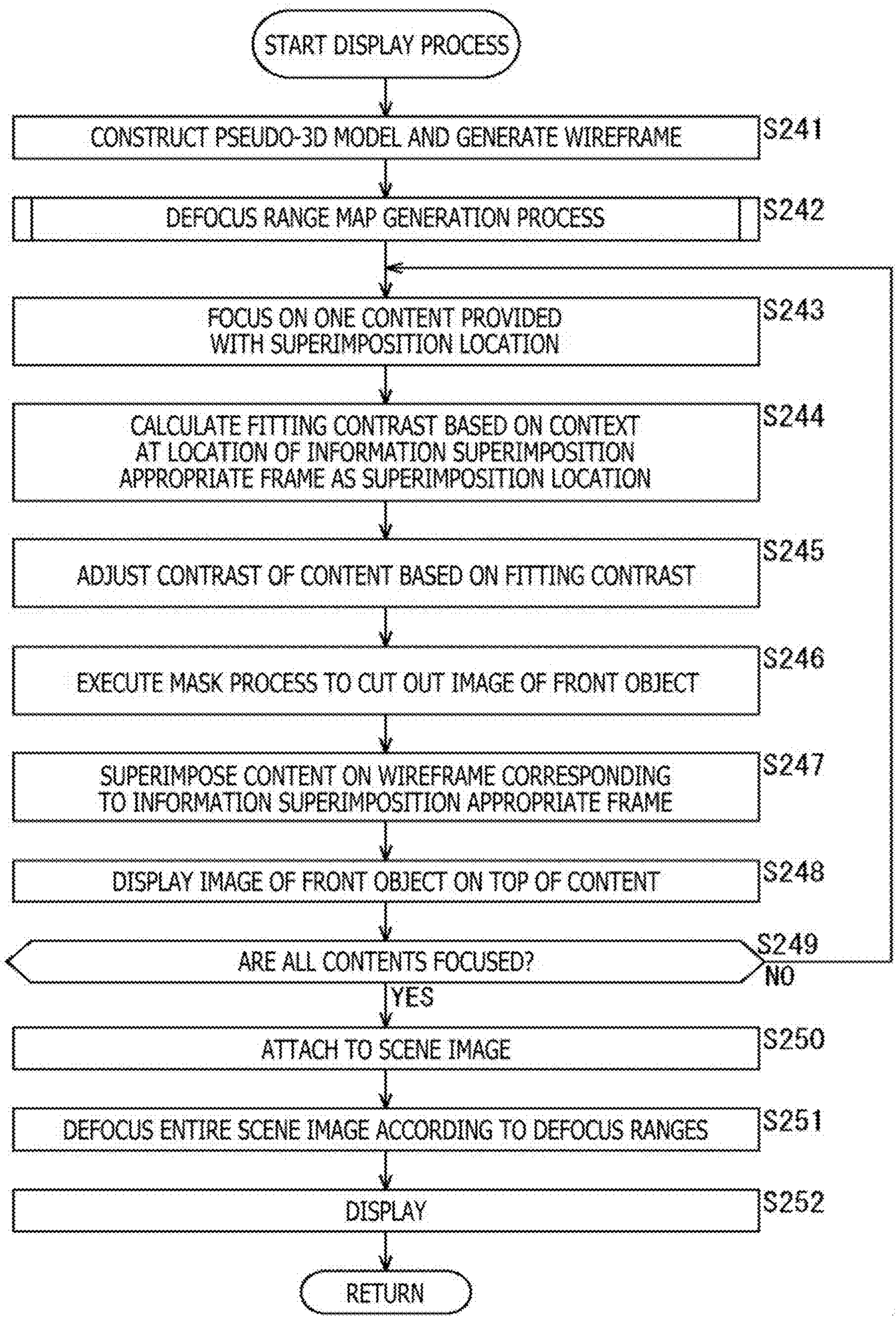
START DISPLAY PROCESS
CONSTRUCT PSEUDO-3D MODEL AND GENERATE WIREFRAME
S241
DEFOCUS RANGE MAP GENERATION PROCESS
S242
FOCUS ON ONE CONTENT PROVIDED WITH SUPERIMPOSITION LOCATION
S243
CALCULATE FITTING CONTRAST BASED ON CONTEXT AT LOCATION OF INFORMATION SUPERIMPOSITION APPROPRIATE FRAME AS SUPERIMPOSITION LOCATION
S244
ADJUST CONTRAST OF CONTENT BASED ON FITTING CONTRAST
S245
EXECUTE MASK PROCESS TO CUT OUT IMAGE OF FRONT OBJECT
S246
SUPERIMPOSE CONTENT ON WIREFRAME CORRESPONDING TO INFORMATION SUPERIMPOSITION APPROPRIATE FRAME
S247
DISPLAY IMAGE OF FRONT OBJECT ON TOP OF CONTENT
S248
ARE ALL CONTENTS FOCUSED?
S249
NO
YES
ATTACH TO SCENE IMAGE
S250
DEFOCUS ENTIRE SCENE IMAGE ACCORDING TO DEFOCUS RANGES
S251
DISPLAY
S252
RETURN

FIG. 51

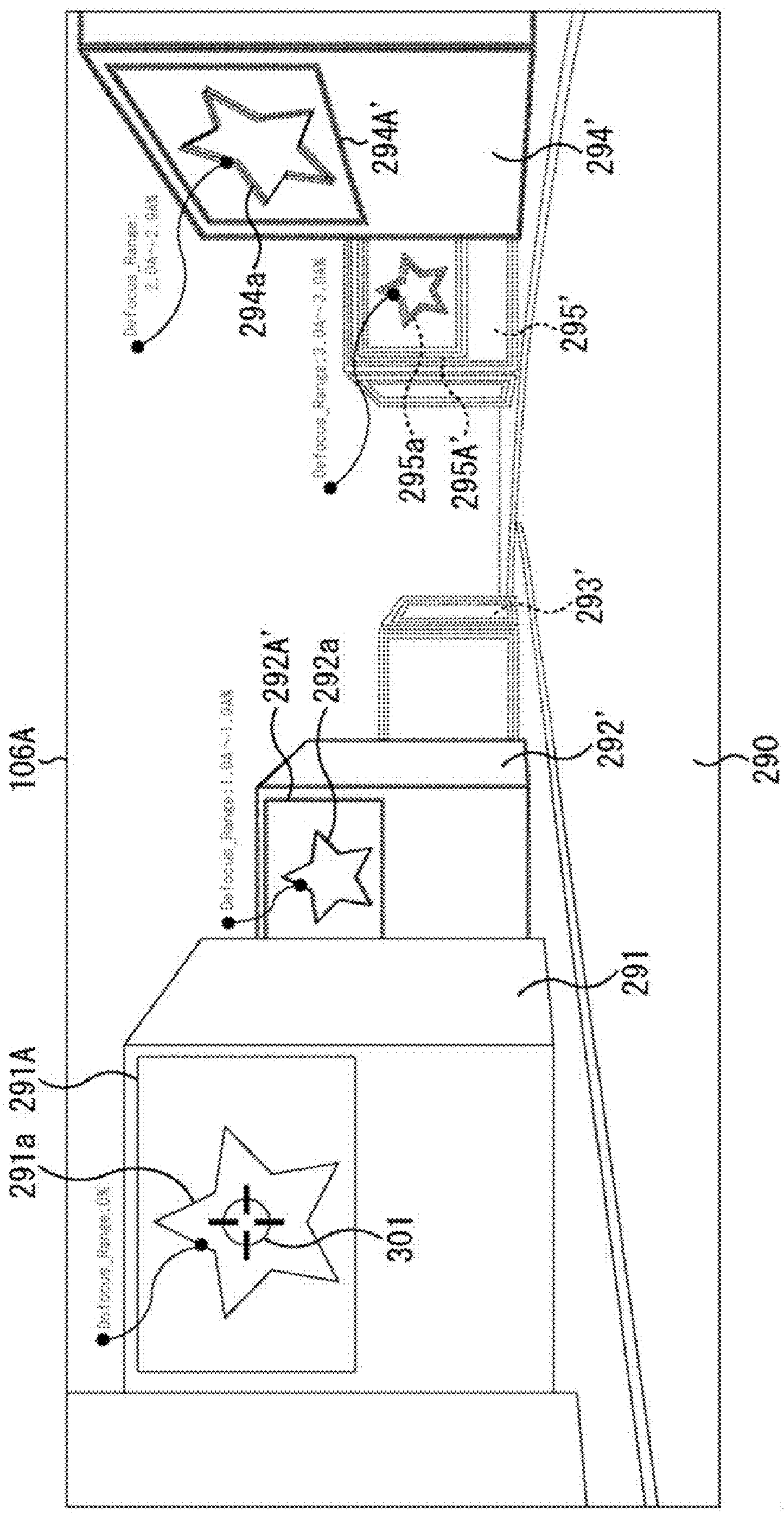
106A
290
291
291A
291a
292'
292a
292A'
293'
294'
294a
294A'
295'
295a'
295A'
301

FIG. 52

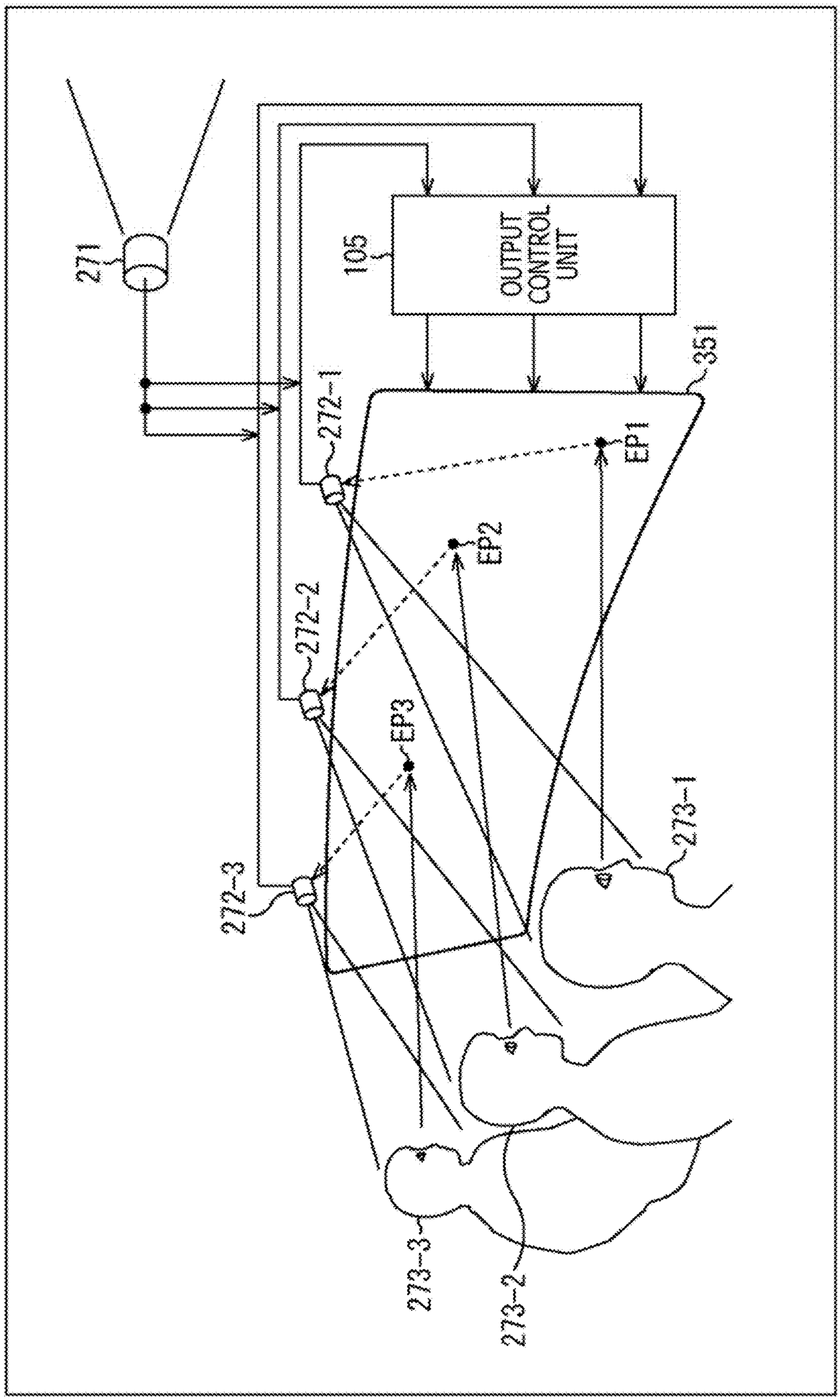
271
105
OUTPUT CONTROL UNIT
351
272-1
272-2
272-3
EP1
EP2
EP3
273-1
273-2
273-3

FIG.53

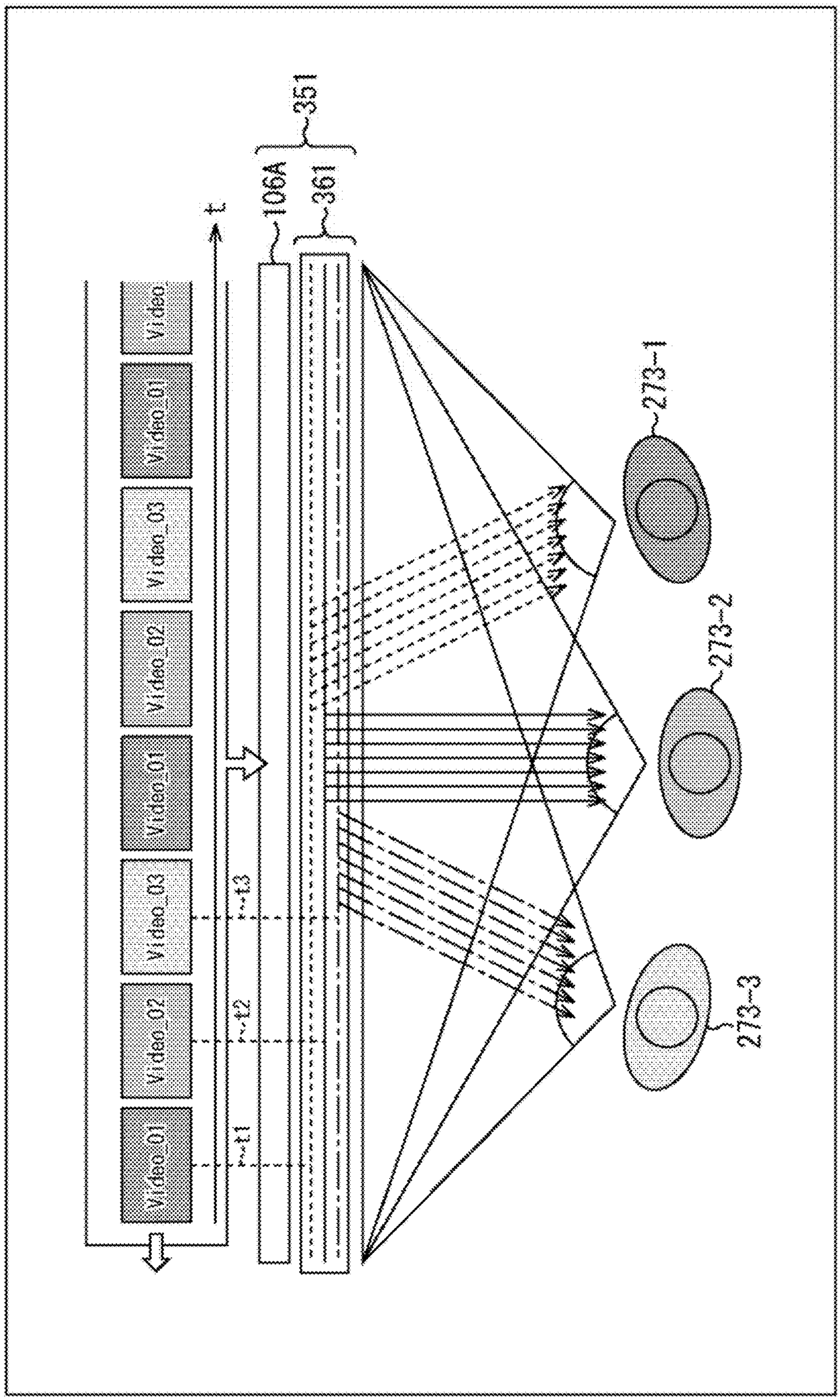
Video_01
Video_02
Video_03
Video_01
Video_02
Video_03
Video
t1
t2
t3
t
106A
361
351
273-1
273-2
273-3

FIG. 54

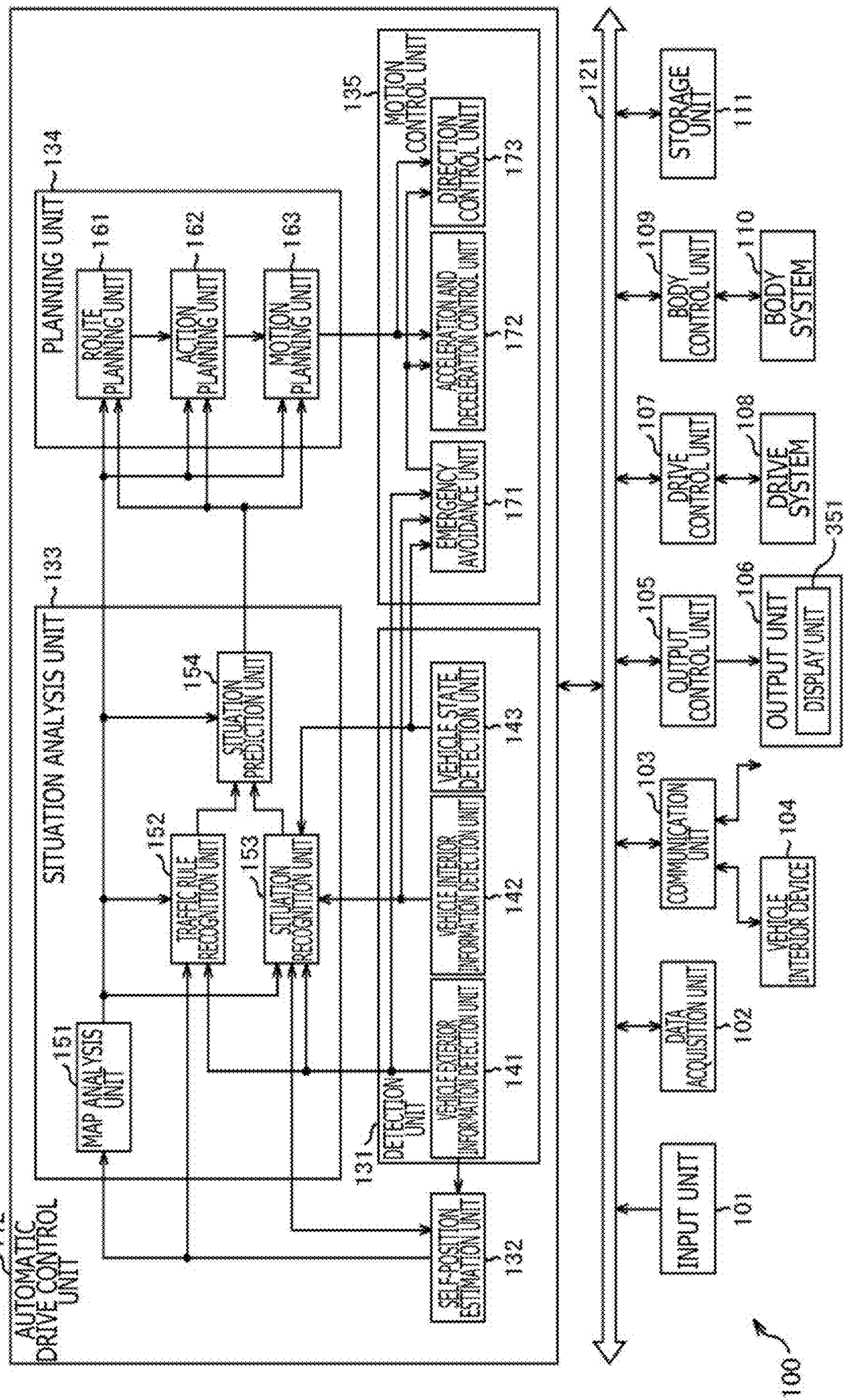
AUTOMATIC DRIVE CONTROL UNIT
112
SITUATION ANALYSIS UNIT
133
MAP ANALYSIS UNIT
151
TRAFFIC RULE RECOGNITION UNIT
152
SITUATION RECOGNITION UNIT
153
SITUATION PREDICTION UNIT
154
SELF-POSITION ESTIMATION UNIT
132
DETECTION UNIT
131
VEHICLE EXTERIOR INFORMATION DETECTION UNIT
141
VEHICLE INTERIOR INFORMATION DETECTION UNIT
142
VEHICLE STATE DETECTION UNIT
143
PLANNING UNIT
134
ROUTE PLANNING UNIT
161
ACTION PLANNING UNIT
162
MOTION PLANNING UNIT
163
MOTION CONTROL UNIT
135
EMERGENCY AVOIDANCE UNIT
171
ACCELERATION AND DECELERATION CONTROL UNIT
172
DIRECTION CONTROL UNIT
173
121
INPUT UNIT
101
DATA ACQUISITION UNIT
102
COMMUNICATION UNIT
103
VEHICLE INTERIOR DEVICE
104
OUTPUT CONTROL UNIT
105
OUTPUT UNIT
106
DISPLAY UNIT
351
DRIVE CONTROL UNIT
107
DRIVE SYSTEM
108
BODY CONTROL UNIT
109
BODY SYSTEM
110
STORAGE UNIT
111
100

FIG. 55

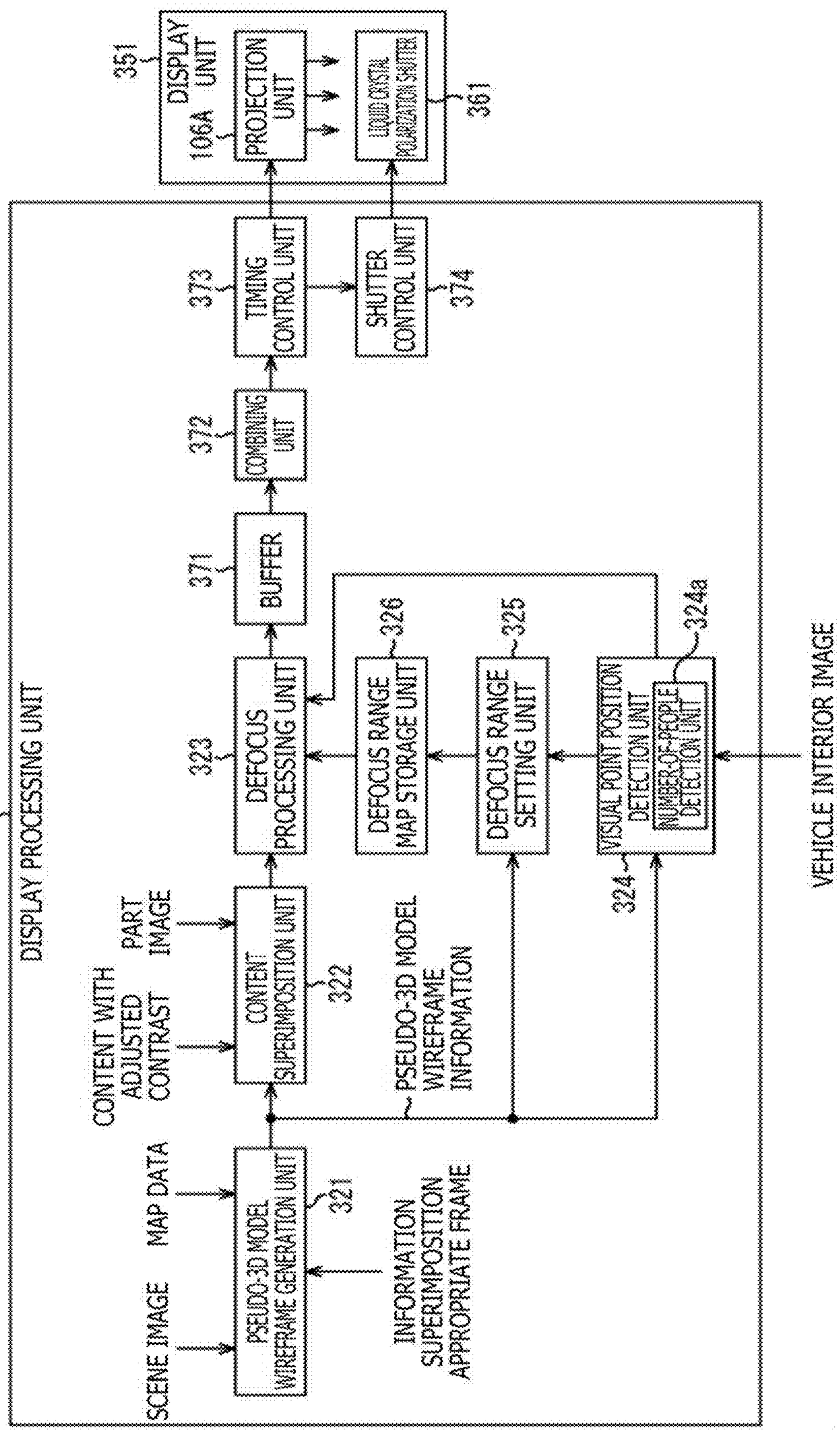
254
DISPLAY PROCESSING UNIT
SCENE IMAGE
MAP DATA
CONTENT WITH ADJUSTED CONTRAST
PART IMAGE
PSEUDO-3D MODEL WIREFRAME GENERATION UNIT
321
CONTENT SUPERIMPOSITION UNIT
322
INFORMATION SUPERIMPOSITION APPROPRIATE FRAME
PSEUDO-3D MODEL WIREFRAME INFORMATION
DEFOCUS PROCESSING UNIT
323
DEFOCUS RANGE MAP STORAGE UNIT
326
DEFOCUS RANGE SETTING UNIT
325
VISUAL POINT POSITION DETECTION UNIT
324
NUMBER-OF-PEOPLE DETECTION UNIT
324a
VEHICLE INTERIOR IMAGE
BUFFER
371
COMBINING UNIT
372
TIMING CONTROL UNIT
373
SHUTTER CONTROL UNIT
374
DISPLAY UNIT
351
PROJECTION UNIT
106A
LIQUID CRYSTAL POLARIZATION SHUTTER
361

FIG. 56

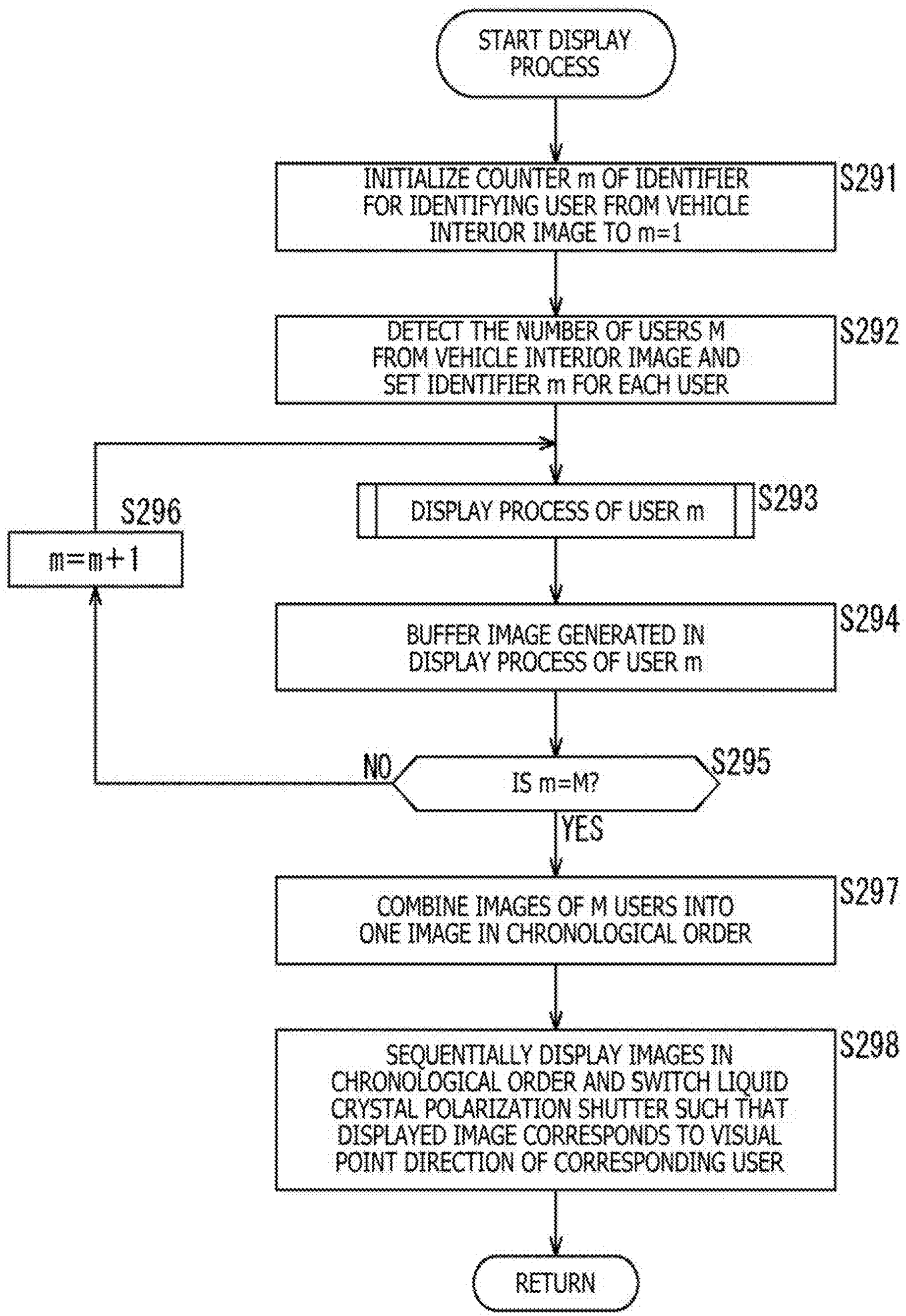
START DISPLAY PROCESS
INITIALIZE COUNTER m OF IDENTIFIER FOR IDENTIFYING USER FROM VEHICLE INTERIOR IMAGE TO m=1
S291
DETECT THE NUMBER OF USERS M FROM VEHICLE INTERIOR IMAGE AND SET IDENTIFIER m FOR EACH USER
S292
DISPLAY PROCESS OF USER m
S293
S296
m=m+1
BUFFER IMAGE GENERATED IN DISPLAY PROCESS OF USER m
S294
NO
IS m=M?
S295
YES
COMBINE IMAGES OF M USERS INTO ONE IMAGE IN CHRONOLOGICAL ORDER
S297
SEQUENTIALLY DISPLAY IMAGES IN CHRONOLOGICAL ORDER AND SWITCH LIQUID CRYSTAL POLARIZATION SHUTTER SUCH THAT DISPLAYED IMAGE CORRESPONDS TO VISUAL POINT DIRECTION OF CORRESPONDING USER
S298
RETURN

FIG. 57

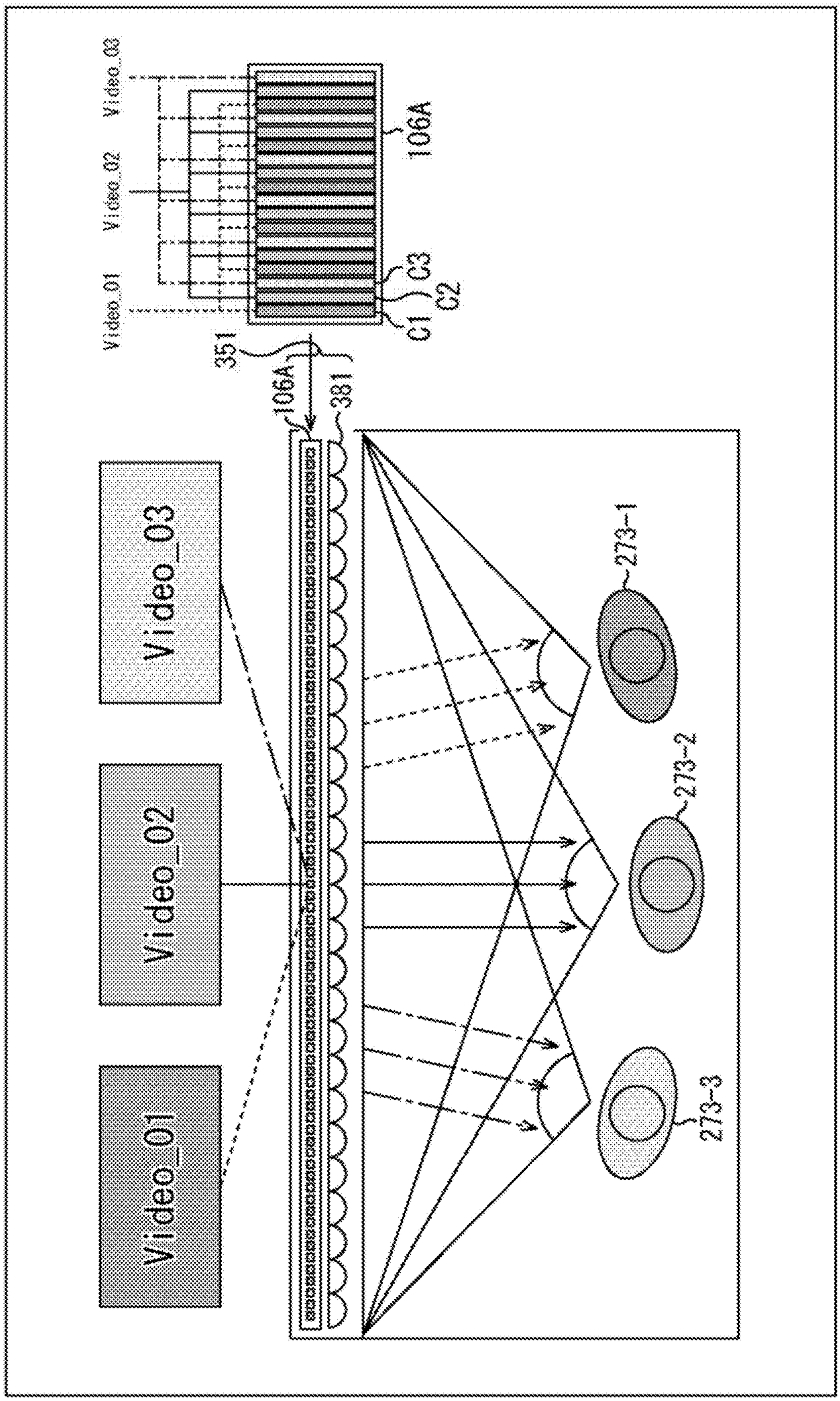
Video_01
Video_02
Video_03
Video_01
Video_02
Video_03
351
106A
381
106A
C1
C2
C3
273-1
273-2
273-3

FIG. 58

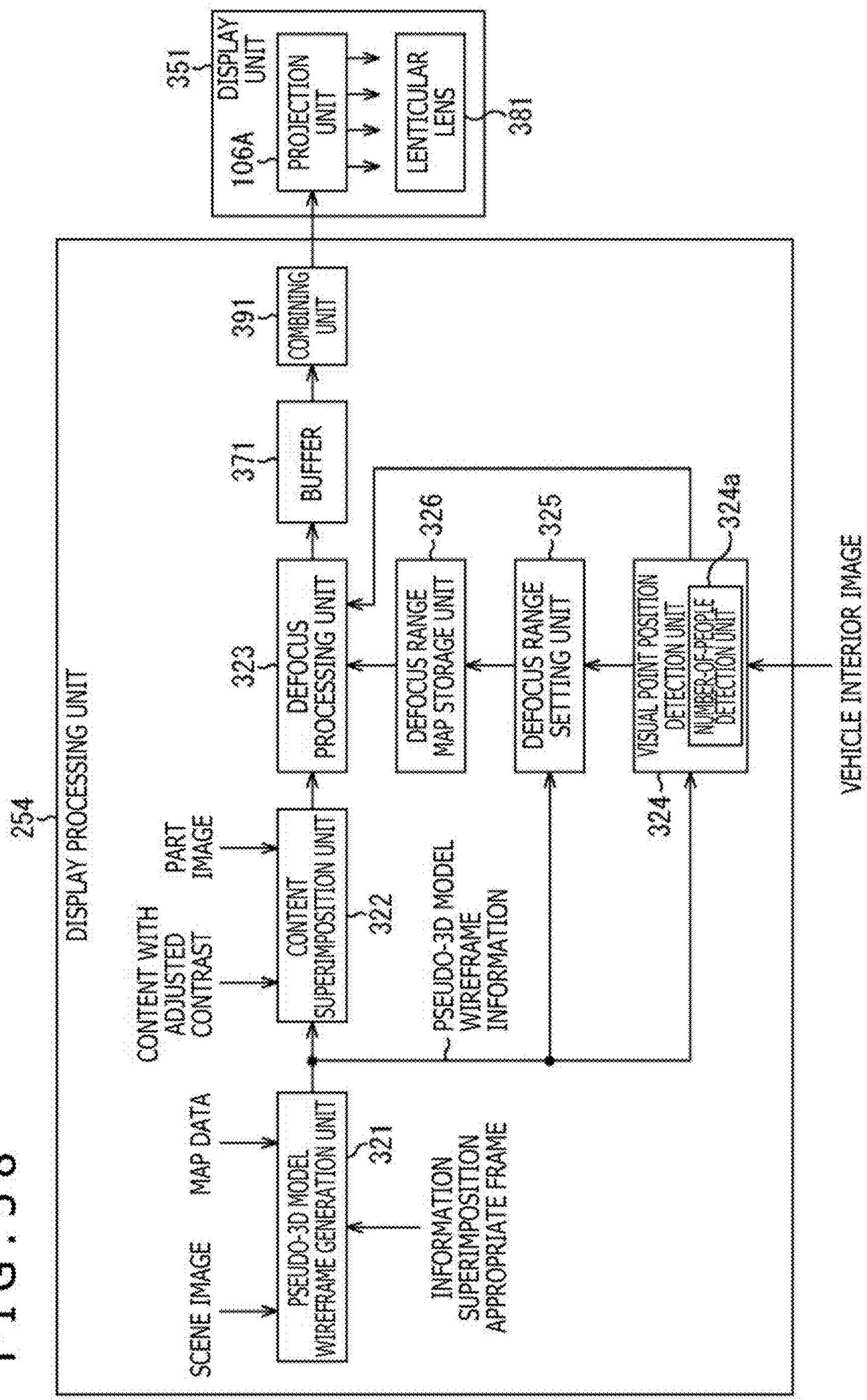
DISPLAY PROCESSING UNIT
254
SCENE IMAGE
MAP DATA
PSEUDO-3D MODEL WIREFRAME GENERATION UNIT
321
INFORMATION SUPERIMPOSITION APPROPRIATE FRAME
CONTENT WITH ADJUSTED CONTRAST
PART IMAGE
CONTENT SUPERIMPOSITION UNIT
322
PSEUDO-3D MODEL WIREFRAME INFORMATION
DEFOCUS PROCESSING UNIT
323
BUFFER
371
COMBINING UNIT
391
DEFOCUS RANGE MAP STORAGE UNIT
326
DEFOCUS RANGE SETTING UNIT
325
VISUAL POINT POSITION DETECTION UNIT
NUMBER-OF-PEOPLE DETECTION UNIT
324
324a
VEHICLE INTERIOR IMAGE
DISPLAY UNIT
351
106A
PROJECTION UNIT
LENTICULAR LENS
381

FIG. 59

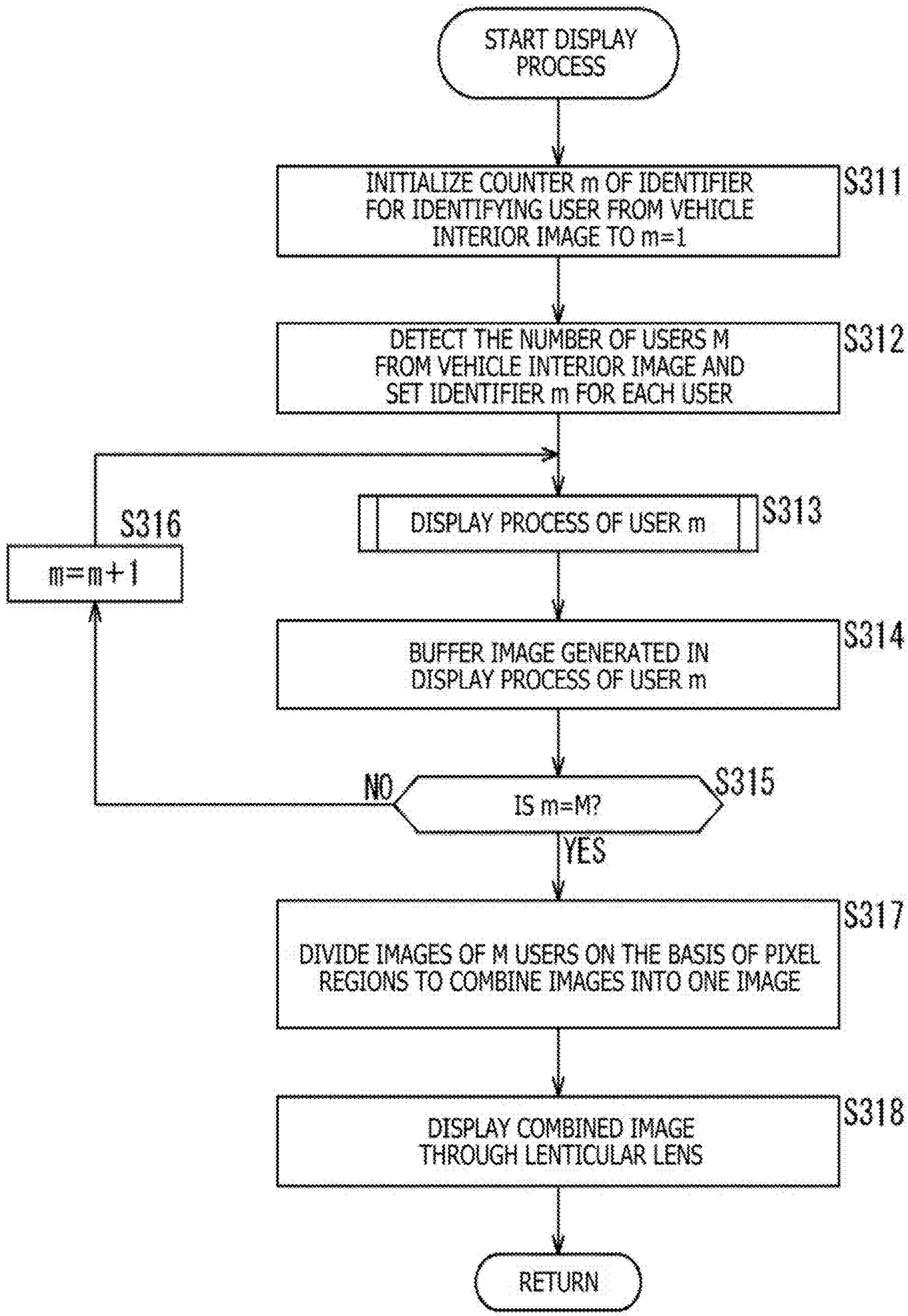
START DISPLAY PROCESS
INITIALIZE COUNTER m OF IDENTIFIER FOR IDENTIFYING USER FROM VEHICLE INTERIOR IMAGE TO m=1
S311
DETECT THE NUMBER OF USERS M FROM VEHICLE INTERIOR IMAGE AND SET IDENTIFIER m FOR EACH USER
S312
DISPLAY PROCESS OF USER m
S313
S316
m=m+1
BUFFER IMAGE GENERATED IN DISPLAY PROCESS OF USER m
S314
NO
IS m=M?
S315
YES
DIVIDE IMAGES OF M USERS ON THE BASIS OF PIXEL REGIONS TO COMBINE IMAGES INTO ONE IMAGE
S317
DISPLAY COMBINED IMAGE THROUGH LENTICULAR LENS
S318
RETURN

FIG. 60

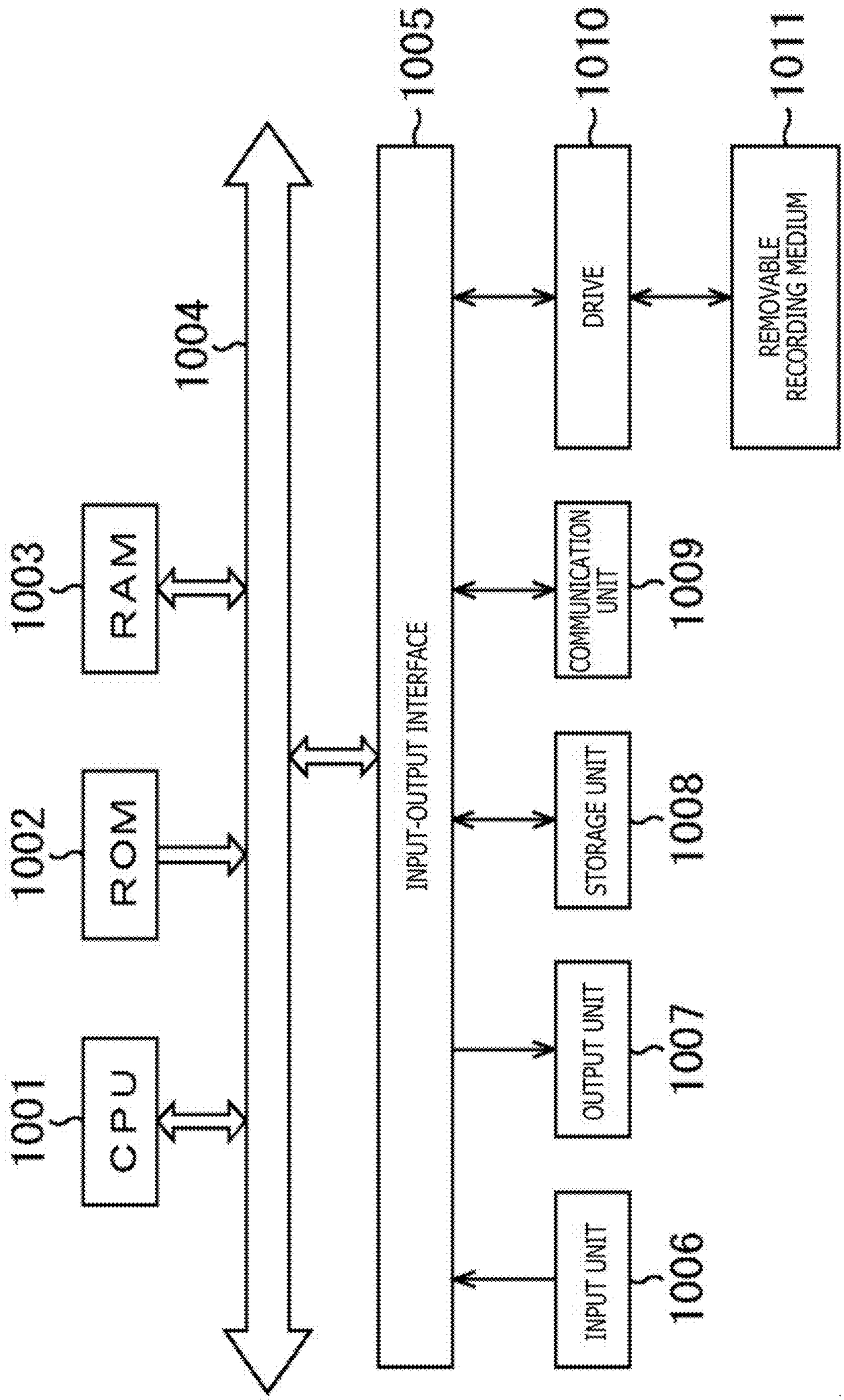
1001
CPU
1002
ROM
1003
RAM
1004
1005
INPUT-OUTPUT INTERFACE
1006
INPUT UNIT
1007
OUTPUT UNIT
1008
STORAGE UNIT
1009
COMMUNICATION UNIT
1010
DRIVE
1011
REMOVABLE RECORDING MEDIUM

INFORMATION PROCESSING APPARATUS, INFORMATION PROCESSING METHOD, PROGRAM, AND MOVING BODY

CROSS-REFERENCE TO RELATED APPLICATIONS

[0001] The present application is a continuation of U.S. application Ser. No. 16/640,727, filed Feb. 21, 2020, which is based on PCT filing PCT/JP2018/030489, filed Aug. 17, 2018, which claims priority to JP 2017-166871, filed Aug. 31, 2017, and JP 2018-069055, filed Mar. 30, 2018, the entire contents of each are incorporated herein by reference.

TECHNICAL FIELD

[0002] The present technique relates to an information processing apparatus, an information processing method, a program, and a moving body, and particularly, to an information processing apparatus, an information processing method, a program, and a moving body that can appropriately display content on top of a scene viewed by a user.

BACKGROUND ART

[0003] There is a technique of using a head-up display to project, to a windshield, information regarding a facility or the like included in a visual field of a driver and presenting the information to the driver. The driver views various types of information on top of a scene spreading in front of the driver.

[0004] PTL 1 discloses a technique of displaying an AR (Augmented Reality) image regarding a facility in association with a real scene viewed by the driver, in which the AR image is displayed far when the vehicle speed is fast, and the AR image is displayed close when the vehicle speed is slow.

CITATION LIST

Patent Literature

[PTL 1]

[0005] Japanese Patent Laid-Open No. 2015-77876

SUMMARY

Technical Problem

[0006] It is desirable to present information in a form that the information can be viewed as if the information is fit into the scene. By displaying the information such that the information is fit into the scene, the driver can view the information while concentrating on the drive.

[0007] The present technique has been made in view of the circumstances, and the present technique can appropriately display content on top of a scene viewed by a user.

Solution to Problem

[0008] An aspect of the present technique provides an information processing apparatus including a setting unit that sets a frame as a superimposition location of content in a region corresponding to a surface of an object on the basis of a movement state of a user, and a display control unit that generates visual information for displaying the content in the region corresponding to the set frame.

[0009] In the aspect of the present technique, the frame as the superimposition location of the content is set in the region corresponding to the surface of the object on the basis of the movement state of the user, and the visual information for displaying the content is generated in the region corresponding to the set frame.

Advantageous Effect of Invention

[0010] According to the present technique, the content can be appropriately displayed on top of the scene viewed by the user.

[0011] Note that the advantageous effect described here may not necessarily be limited, and the advantageous effect may be any of the advantageous effects described in the present disclosure.

BRIEF DESCRIPTION OF DRAWINGS

[0012] FIG. **1** is a diagram illustrating an interior of a vehicle provided with a vehicle control system according to a first embodiment of the present technique.

[0013] FIG. **2** is a diagram illustrating an example of an appearance of content.

[0014] FIG. **3** depicts diagrams each illustrating a display example of the content for realizing the appearance illustrated in FIG. **2**.

[0015] FIG. **4** is a diagram schematically illustrating display of the content.

[0016] FIG. **5** is a diagram illustrating an example of the appearance of the content after a lapse of certain time from the state of FIG. **2**.

[0017] FIG. **6** is a diagram illustrating an example of the appearance of the content after a lapse of certain time from the state of FIG. **5**.

[0018] FIG. **7** is a diagram illustrating an example of the appearance of the content after a lapse of certain time from the state of FIG. **6**.

[0019] FIG. **8** is a block diagram illustrating a configuration example of the vehicle control system of the first embodiment.

[0020] FIG. **9** is a block diagram illustrating a functional configuration example of an output control unit of FIG. **8**.

[0021] FIG. **10** is a block diagram illustrating a configuration example of an information superimposition appropriate visual field setting unit of FIG. **9**.

[0022] FIG. **11** is a diagram illustrating an example of a three-dimensional model of an object.

[0023] FIG. **12** is a diagram illustrating an example of setting information superimposition possible frames.

[0024] FIG. **13** is a diagram illustrating an example of the information superimposition possible frames excluded by an exclusion rule 1.

[0025] FIG. **14** is a diagram illustrating an example of the information superimposition possible frames excluded by an exclusion rule 2.

[0026] FIG. **15** is a diagram illustrating an example of the information superimposition possible frames excluded by an exclusion rule 3.

[0027] FIG. **16** is a diagram illustrating an example of the information superimposition possible frames excluded by an exclusion rule 4.

[0028] FIG. **17** is a diagram illustrating an example of the information superimposition possible frames excluded by an exclusion rule 5.

[0029] FIG. **18** is a diagram illustrating an example of the information superimposition possible frames excluded by an exclusion rule 6.

[0030] FIG. **19** is a diagram illustrating an example of transition of a vehicle position.

[0031] FIG. **20** is a diagram illustrating an example of a change in direction of the vehicle.

[0032] FIG. **21** depicts diagrams illustrating scene images at vehicle positions.

[0033] FIG. **22** is a diagram illustrating an example of an angular velocity in a user visual field.

[0034] FIG. **23** is a diagram illustrating an example of an angle with respect to a vehicle traveling direction.

[0035] FIG. **24** is a diagram illustrating an example of an exposed area ratio.

[0036] FIG. **25** is a diagram illustrating the example of the exposed area ratio.

[0037] FIG. **26** is a diagram illustrating an example of stay time in the user visual field.

[0038] FIG. **27** is a diagram illustrating an example of setting an information superimposition appropriate visual field.

[0039] FIG. **28** is a block diagram illustrating a configuration example of a superimposition target frame selection unit of FIG. **9**.

[0040] FIG. **29** depicts diagrams each illustrating an example of content information items.

[0041] FIG. **30** depicts diagrams each illustrating an example of fitness.

[0042] FIG. **31** is a diagram illustrating an example of setting superimposition locations.

[0043] FIG. **32** is a diagram illustrating an example of the superimposition locations.

[0044] FIG. **33** is a block diagram illustrating a configuration example of a display control unit of FIG. **9**.

[0045] FIG. **34** is a diagram illustrating an example of adjustment of contrast on the basis of fitting contrast.

[0046] FIG. **35** is a diagram illustrating an example of display of a front object.

[0047] FIG. **36** is a flow chart describing an information display process.

[0048] FIG. **37** is a flow chart describing an information superimposition appropriate visual field setting process executed in step S**3** of FIG. **36**.

[0049] FIG. **38** is a flow chart following FIG. **37**, describing the information superimposition appropriate visual field setting process executed in step S**3** of FIG. **36**.

[0050] FIG. **39** is a flow chart describing a superimposition target frame selection process executed in step S**4** of FIG. **36**.

[0051] FIG. **40** is a flow chart describing a display process executed in step S**5** of FIG. **36**.

[0052] FIG. **41** is a flow chart describing a pre-analysis process of content.

[0053] FIG. **42** is a diagram describing a summary of an example of superimposing, defocusing, and displaying the content on information superimposition appropriate frames according to a visual point position of the user when there is one user according to a second embodiment of the present technique.

[0054] FIG. **43** is a diagram describing a setting example of a defocus range in a case where there is one information superimposition appropriate frame.

[0055] FIG. **44** is a diagram describing a setting example of defocus ranges in a case where there is a plurality of information superimposition appropriate frames and describing a display example when a projection unit is a transmissive display.

[0056] FIG. **45** is a diagram describing a configuration example of the display control unit according to the second embodiment of the present technique.

[0057] FIG. **46** is a diagram describing a configuration example of a display processing unit of FIG. **45**.

[0058] FIG. **47** is a flow chart describing a display process of the display control unit of FIG. **45**.

[0059] FIG. **48** is a flow chart describing a defocus range map generation process of step S**202** in FIG. **47**.

[0060] FIG. **49** is a diagram describing a configuration example of the display processing unit when the projection unit is a non-transmissive display according to a modification of the second embodiment of the present technique.

[0061] FIG. **50** is a flow chart describing a display process of the display control unit of FIG. **45** in which the display processing unit of FIG. **49** is applied.

[0062] FIG. **51** is a diagram describing a setting example of the defocus ranges in a case where there is a plurality of information superimposition appropriate frames and describing a display example when the projection unit is a non-transmissive display.

[0063] FIG. **52** is a diagram describing a summary of an example of superimposing, defocusing, and displaying the content on the information superimposition appropriate frames according to the visual point positions of a plurality of users when there is a plurality of users according to a third embodiment of the present technique.

[0064] FIG. **53** is a diagram describing a configuration example of a display unit using a liquid crystal polarization shutter in the case of superimposing, defocusing, and displaying the content on the information superimposition appropriate frames according to the visual point positions of a plurality of users when there is a plurality of users.

[0065] FIG. **54** is a block diagram illustrating a configuration example of the vehicle control system of the third embodiment.

[0066] FIG. **55** is a block diagram illustrating a configuration example of the display processing unit when the liquid crystal polarization shutter is used for the display unit in the display control unit of the output control unit in the vehicle control system of FIG. **54**.

[0067] FIG. **56** is a flow chart describing a display process of the display control unit of FIG. **45** in which the display processing unit of FIG. **55** is applied.

[0068] FIG. **57** is a diagram describing a configuration example of the display unit using lenticular lenses in the case of superimposing, defocusing, and displaying the content on the information superimposition appropriate frames according to the visual point positions of a plurality of users when there is a plurality of users.

[0069] FIG. **58** is a block diagram illustrating a configuration example of the display processing unit when the lenticular lenses are used for the display unit in the display control unit of the output control unit in the vehicle control system of FIG. **54**.

[0070] FIG. **59** is a flow chart describing a display process of the display control unit of FIG. **45** in which the display processing unit of FIG. **58** is applied.

[0071] FIG. **60** is a block diagram illustrating a configuration example of a computer.

DESCRIPTION OF EMBODIMENTS

[0072] Hereinafter, embodiments of the present technique will be described. The embodiments will be described in the following order.

1. First Embodiment

1-1. Display Example of Content

1-2. Configuration Example of Vehicle Control System

1-3. Motion of Vehicle Control System

1-4. Modification

2. Second Embodiment

2-1. Summary of Second Embodiment

2-2. Setting Example of Defocus Range

2-3. Setting Example of Defocus Ranges in Case Where There Is Plurality Of Information Superimposition Appropriate Frames

2-4. Configuration Example of Second Embodiment of Display Control Unit

2-5. Modification

3. Third Embodiment

3-1. Summary of Third Embodiment

3-2. Configuration Example of Vehicle Control System

3-3. Display Process of Display Processing Unit in FIG. **55**

3-4. Modification

1. First Embodiment

<<1-1. Display Example of Content>>

[0073] FIG. **1** is a diagram illustrating an interior near a driver's seat of a vehicle provided with a vehicle control system according to an embodiment of the present technique.

[0074] As illustrated in FIG. **1**, a windshield G is provided beyond a dashboard as viewed from a user (driver) sitting on the driver's seat. The vehicle control system displays content by, for example, projecting an image on the windshield G. The user views the content on top of a scene that can be viewed through the windshield G.

[0075] Note that, although the occupant of the vehicle viewing the content is the driver in the case described below, the user viewing the content may also be another user sitting on the front seat or the back seat.

[0076] Examples of the content to be displayed include images representing various types of information, such as entertainment information, practical information, and advertisement. The images displayed as content are moving images in some cases and still images in other cases. The images may or may not include characters.

[0077] A projection unit that realizes AR display of the content is provided on a predetermined position, for example, on the back side of the rearview mirror and the upper surface of the dashboard. Other than the projection unit, various devices that project virtual images may be used as devices that realize the AR display. For example, a transmissive display attached to the windshield G may be used, or a transmissive HMD (Head Mounted Display) worn by the user may be used.

[0078] The vehicle control system uses optimal expression to display the content at an optimal place in the scene. Specifically, among frames set on a wall surface of an object, such as a building, existing in the scene, a frame that can be easily viewed by the user is selected as the optimal place on the basis of a movement state. In addition, to provide the content as if the content is actually projected on the wall surface of the building, the content is displayed after executing image processing according to the appearance of the wall surface.

[0079] FIG. **2** is a diagram illustrating an example of the appearance of the content.

[0080] A scene depicted in a range of a horizontally long rectangle illustrated in FIG. **2** represents part of the scene viewed by the user sitting on the driver's seat. A curve to the right can be viewed in front of the vehicle. There is a building B**1** on the near side on the right of the curve, and there is a building B**2** on the far side of the curve. There is a building B**3** further beyond the building B**2** along the road.

[0081] As illustrated in FIG. **2**, a rectangular frame modified according to the orientation of the wall surface is set on the wall surface of the building B**1**, and content C**1** is displayed in the frame.

[0082] Similarly, content C**2** is displayed in the frame set on the wall surface of the building B**2**, and content C**3** is displayed in the frame set on the wall surface of the building B**3**. The content is displayed large on the wall surface of a building at a short distance, and the content is displayed small on the wall surface of a building at a long distance.

[0083] The vehicle speed is displayed on the upper left. In this way, various types of information other than the content can also be displayed.

[0084] FIG. **3** depicts diagrams each illustrating a display example of the content for realizing the appearance of the scene as illustrated in FIG. **2**.

[0085] A of FIG. **3** illustrates an actual scene viewed in front of the user. As illustrated in A of FIG. **3**, the curve to the right can be viewed in front of the vehicle, and the buildings B**1** to B**3** can be viewed along the road in the actual scene.

[0086] The contents C**1** to C**3** are displayed in the scene in a form as illustrated in B of FIG. **3**, and the same appearance of content as in FIG. **2** is realized as illustrated in C of FIG. **3**.

[0087] FIG. **4** is a diagram schematically illustrating the display of the content.

[0088] The content is displayed by displaying the image in a region on the windshield G corresponding to the frame set on the building. On the basis of a position P that is the position of the user, a region inside straight lines connecting the position P and the frame (diagonal line part) is the region on the windshield G corresponding to the frame. A horizon-

tal line in FIG. **4** represents the windshield G as a display surface between the user and the building.

[0089] In the example of FIG. **4**, a region on the windshield G corresponding to a frame set on a building B**1'** is a region G**1**, and a region on the windshield G corresponding to a frame set on a building B**2'** is a region G**2**. The content can be displayed in each of the region G**1** and the region G**2** to realize the appearance as if the content is displayed on each of the wall surfaces of the building B**1'** and the building B**2'**.

[0090] The user views the content displayed in the region G**1** on top of the building B**1'** viewed through the windshield G. In addition, the user views the content displayed in the region G**2** on top of the building B**2'** viewed through the windshield G. In this way, the user can view various types of information as if the information is displayed on the wall surfaces of the buildings.

[0091] In this way, the superimposition of the content on the frames set on the wall surfaces of the buildings is realized by displaying the images on the windshield G.

[0092] The displayed content is updated in real time according to the traveling state (movement state) during the traveling of the vehicle. The appearance of the content also changes with a change in appearance of the scene from the driver's seat.

[0093] FIG. **5** is a diagram illustrating an example of the appearance of the content after a lapse of certain time from the state of FIG. **2**.

[0094] The state of FIG. **5** is a state in which the vehicle is turning the curve. Most of the building B**1** viewed on the right is out of the visual field, and the content C**1** superimposed on the building B**1** cannot be viewed.

[0095] In addition, the building B**2** is getting closer in front of vehicle, and the content C**2** is displayed larger than in the state of FIG. **2**. The content C**2** is displayed in a size and a shape as if the content C**2** is displayed on the wall surface of the building B**2** on the basis of the positional relationship between the vehicle and the wall surface of the building B**2**. The details of the displayed content C**2** also change with a lapse of time.

[0096] Similarly, the display of the content C**3** also changes with a change in appearance of the building B**3**.

[0097] In addition, a building B**4** not viewed in the state of FIG. **2** is newly viewed beyond the building B**3** in the example of FIG. **5**. Frames are also set on two wall surfaces of the building B**4** that can be viewed from the user, and content C**4-1** and content C**4-2** are superimposed on the frames, respectively.

[0098] FIG. **6** is a diagram illustrating an example of the appearance of the content after a lapse of certain time from the state of FIG. **5**.

[0099] The state of FIG. **6** is a state in which the vehicle is moving straight the road after turning the curve. Most of the building B**2** viewed on the left is out of the visual field, and the content C**2** superimposed on the building B**2** cannot be viewed.

[0100] Furthermore, in addition to a building B**5** hardly viewed in the state of FIG. **5**, buildings B**6** and B**7** can be viewed in front, and content is superimposed on each of the wall surfaces.

[0101] FIG. **7** is a diagram illustrating an example of the appearance of the content after a lapse of certain time from the state of FIG. **6**.

[0102] The state of FIG. **7** is a state in which the vehicle is moving straight at a position in front of the building B**4**. The display of the content superimposed on each of the buildings B**4** to B**7** is changed with a change in appearance of the building. In addition, a building B**8** hardly viewed in the state of FIG. **6** can be viewed large on the right, and content is also superimposed on the wall surface of the building B**8**.

[0103] Note that, although the frames are set on the wall surfaces of the buildings in the case described here, the frames are also set on various structures, such as a water storage tank and sound-proof walls installed on both sides of a highway, and the content is superimposed. The target of setting the frames is not limited to the structures, and the target may also be natural objects, such as a slope of a mountain viewed at a long distance and a sea surface. The frames may also be set on the road itself, and the content may be superimposed.

[0104] That is, the frames can be set on various objects in the visual field of the user driving the vehicle, and the content can be superimposed. In the following description, the object as a superimposition location of the content is mainly the building.

[0105] In this way, the vehicle control system displays the content by superimposing the content on the building viewed during driving. Furthermore, the content superimposed on the building is displayed by changing the shape and the size according to the change in appearance viewed by the user.

[0106] As described in detail later, image processing is actually applied to the content by reducing the contrast in a case where the building is at a long distance so that the building looks blurry or by reducing the contrast in a case where intense light shines on the building so that the building looks bright.

[0107] The content is displayed in a form as if the content is displayed on the building, and the display changes with a change in appearance of the scene. Therefore, the user can view the content in a natural form while driving.

[0108] A process of the vehicle control system that realizes the display of the content will be described later with reference to flow charts.

<<1-2. Configuration Example of Vehicle Control System>>

<1-2-1. Overall Configuration of Vehicle Control System>

[0109] FIG. **8** is a block diagram illustrating a configuration example of a vehicle control system **100**. The vehicle control system **100** illustrated in FIG. **8** functions as an information processing apparatus.

[0110] Note that, in a case where the vehicle provided with the vehicle control system **100** is to be distinguished from other vehicles, the vehicle will be appropriately referred to as a user's car or a user's vehicle.

[0111] The vehicle control system **100** includes an input unit **101**, a data acquisition unit **102**, a communication unit **103**, a vehicle interior device **104**, an output control unit **105**, an output unit **106**, a drive control unit **107**, a drive system **108**, a body control unit **109**, a body system **110**, a storage unit **111**, and an automatic drive control unit **112**. The input unit **101**, the data acquisition unit **102**, the communication unit **103**, the output control unit **105**, the drive control unit **107**, the body control unit **109**, the storage

unit **111**, and the automatic drive control unit **112** are connected to each other through a communication network **121**.

[0112] The communication network **121** includes, for example, an on-board communication network in compliance with an arbitrary standard, such as CAN (Controller Area Network), LIN (Local Interconnect Network), LAN (Local Area Network), and FlexRay (registered trademark), a bus, and the like. The components of the vehicle control system **100** may be directly connected without the involvement of the communication network **121**.

[0113] The input unit **101** includes an apparatus used by the occupant to input various data, instructions, and the like. For example, the input unit **101** includes an operation device, such as a touch panel, a button, a microphone, a switch, and a lever, an operation device that allows input using a method other than manual operation, such as sound and gesture, and the like.

[0114] In addition, for example, the input unit **101** may be a remote control apparatus using infrared rays or other radio waves or may be an external connection device, such as a mobile device and a wearable device, corresponding to operation of the vehicle control system **100**. The input unit **101** generates an input signal on the basis of data, an instruction, or the like input by the occupant and supplies the input signal to each component of the vehicle control system **100**.

[0115] The data acquisition unit **102** includes various sensors and the like that acquire data to be used for the process of the vehicle control system **100** and supplies the acquired data to each component of the vehicle control system **100**.

[0116] For example, the data acquisition unit **102** includes various sensors for detecting the state and the like of the user's car. Specifically, the data acquisition unit **102** includes, for example, a gyrosensor, an acceleration sensor, an inertial measurement apparatus (IMU), and sensors for detecting an amount of operation of an accelerator pedal, an amount of operation of a brake pedal, a steering angle of a steering wheel, an engine speed, a motor speed, a rotational speed of a wheel, and the like.

[0117] In addition, the data acquisition unit **102** includes, for example, various sensors for detecting information outside the user's car. Specifically, the data acquisition unit **102** includes, for example, an imaging apparatus, such as a ToF (Time Of Flight) camera, a stereo camera, a monocular camera, an infrared camera, and other cameras. In addition, the data acquisition unit **102** includes, for example, environment sensors for detecting weather, climate conditions, and the like and surrounding information detection sensors for detecting objects around the user's car. The environment sensors include, for example, a rain sensor, a fog sensor, a sunlight sensor, a snow sensor, and the like. The surrounding information detection sensors include, for example, an ultrasonic sensor, a radar, a LiDAR (Light Detection and Ranging, Laser Imaging Detection and Ranging), a sonar, and the like.

[0118] Furthermore, the data acquisition unit **102** includes, for example, various sensors for detecting a current position of the user's car. Specifically, the data acquisition unit **102** includes, for example, a GNSS receiver or the like that receives a signal from a GNSS (Global Navigation Satellite System) satellite.

[0119] In addition, the data acquisition unit **102** includes, for example, various sensors for detecting information inside the vehicle. Specifically, the data acquisition unit **102** includes, for example, an imaging apparatus that images the driver, a biosensor that detects biological information of the driver, a microphone that collects sound of the vehicle interior, and the like. The biosensor is provided on, for example, the seat surface, the steering wheel, or the like, and the biosensor detects the biological information of the occupant sitting in the seat or the driver holding the steering wheel.

[0120] The camera included in the data acquisition unit **102** images the scene in the traveling direction of the vehicle. A scene image taken by the camera is analyzed to specify the presence or absence of buildings, the brightness of the buildings, the brightness of the surroundings, and the like.

[0121] In addition, the state of the vehicle, such as the traveling direction and the velocity, is specified on the basis of the results detected by various sensors included in the data acquisition unit **102**. The specified state of the vehicle is used for prediction or the like of the traveling route of the vehicle.

[0122] The communication unit **103** communicates with the vehicle interior device **104** as well as various devices, servers, base stations, and the like outside the vehicle to transmit data supplied from each of the components of the vehicle control system **100** and to supply received data to each of the components of the vehicle control system **100**. Note that the communication protocol supported by the communication unit **103** is not particularly limited, and the communication unit **103** can also support a plurality of types of communication protocols.

[0123] For example, the communication unit **103** uses a wireless LAN, Bluetooth (registered trademark), NFC (Near Field Communication), WUSB (Wireless USB), or the like to wirelessly communicate with the vehicle interior device **104**. In addition, the communication unit **103** uses a USB (Universal Serial Bus), HDMI (registered trademark) (High-Definition Multimedia Interface), MHL (Mobile High-definition Link), or the like to perform wired communication with the vehicle interior device **104** through a connection terminal (and a cable if necessary) not illustrated.

[0124] The communication unit **103** communicates with a device (for example, an application server or a control server) existing on an external network (for example, the Internet, a cloud network, or a network specific to a service provider) through a base station or an access point.

[0125] The content to be superimposed on the scene may be acquired from a server that manages the content. In this case, the communication unit **103** communicates with the server to acquire the content. The content acquired by the communication unit **103** is supplied and stored in, for example, the storage unit **111**.

[0126] The communication unit **103** uses a P2P (Peer To Peer) technique to communicate with a terminal (for example, a terminal of a pedestrian or a shop, or an MTC (Machine Type Communication) terminal) existing near the user's car. In addition, the communication unit **103** performs V2X communication, such as vehicle-to-vehicle communication, vehicle-to-infrastructure communication, vehicle-to-home communication, and vehicle-to-pedestrian communication. The communication unit **103** includes a beacon reception unit and receives a radio wave or an electromag-

netic wave transmitted from a wireless station or the like installed on the road to acquire information regarding a current position, a traffic jam, a traffic regulation, a required time, and the like.

[0127] The vehicle interior device **104** includes, for example, a mobile device or a wearable device possessed by the occupant, an information device carried in or attached to the user's car, a navigation apparatus that searches for a route to an arbitrary destination, and the like.

[0128] The output control unit **105** controls output of various types of information to the occupant of the user's car or to the outside of the vehicle. For example, the output control unit **105** generates an output signal including at least one of visual information (for example, image data) and auditory information (for example, audio data) and supplies the output signal to the output unit **106** to control the output of the visual information and the auditory information from the output unit **106**.

[0129] Specifically, for example, the output control unit **105** combines image data imaged by different imaging apparatuses of the data acquisition unit **102** to generate a bird's-eye image, a panoramic image, or the like and supplies an output signal including the generated image to the output unit **106**. In addition, for example, the output control unit **105** generates audio data including warning sound, a warning message, or the like for danger, such as collision, contact, and entry into a danger zone, and supplies an output signal including the generated audio data to the output unit **106**.

[0130] The output unit **106** includes an apparatus that can output the visual information or the auditory information to the occupant of the user's car or to the outside the vehicle. For example, the output unit **106** includes a display apparatus, an instrument panel, an audio speaker, headphones, a wearable device such as a head-mounted display worn by the occupant, a lamp, and the like.

[0131] In addition, the output unit **106** includes a projection unit **106**A. The projection unit **106**A is a display device, such as an HUD and a transmissive display, with an AR display function. The projection unit **106**A projects various types of information, such as content, to the windshield G as described above.

[0132] The drive control unit **107** supplies various control signals to the drive system **108** to control the drive system **108**. In addition, the drive control unit **107** supplies control signals to components other than the drive system **108** as necessary to send a notification or the like of the control state of the drive system **108**.

[0133] The drive system **108** includes various apparatuses regarding the drive system of the user's car. For example, the drive system **108** includes a driving force generation apparatus, such as an internal combustion engine and a drive motor, for generating driving force, a driving force transmission mechanism for transmitting the driving force to the wheel, a steering mechanism that adjusts the steering angle, a braking apparatus that generates braking force, an ABS (Antilock Brake System), an ESC (Electronic Stability Control), an electric power steering apparatus, and the like.

[0134] The body control unit **109** generates various control signals and supplies the control signals to the body system **110** to control the body system **110**. In addition, the body control unit **109** supplies the control signals to components other than the body system **110** as necessary to send a notification or the like of the control state of the body system **110**.

[0135] The body system **110** includes various apparatuses of the body equipped on the vehicle body. For example, the body system **110** includes a keyless entry system, a smart key system, a power window apparatus, a power seat, a steering wheel, an air conditioner, various lamps (for example, a headlamp, a back lamp, a brake lamp, a turn signal, a fog lamp, and the like), and the like.

[0136] The storage unit **111** includes a storage device, such as an SSD (Solid State Drive) and an HDD (Hard Disc Drive). The storage unit **111** stores programs, data, and the like used by the components of the vehicle control system **100**.

[0137] For example, map data, such as a three-dimensional highly accurate map like a dynamic map, a global map covering a wide area with lower accuracy than the highly accurate map, and a local map including information regarding the surroundings of the user's car, is stored in the storage unit **111**.

[0138] The automatic drive control unit **112** performs control regarding automatic drive, such as autonomous traveling and drive support. For example, the automatic drive control unit **112** performs cooperative control to realize functions of ADAS (Advanced Driver Assistance System) including collision avoidance or shock mitigation of the user's car, follow-up traveling on the basis of the following distance, traveling at a constant speed, collision warning of the user's car, lane departure warning of the user's car, and the like. In addition, the automatic drive control unit **112** performs cooperative control aimed at automatic drive or the like for autonomous traveling regardless of the operation of the driver.

[0139] The automatic drive control unit **112** includes a detection unit **131**, a self-position estimation unit **132**, a situation analysis unit **133**, a planning unit **134**, and a motion control unit **135**.

[0140] The detection unit **131** detects various types of information necessary for controlling the automatic drive. The detection unit **131** includes a vehicle exterior information detection unit **141**, a vehicle interior information detection unit **142**, and a vehicle state detection unit **143**.

[0141] The vehicle exterior information detection unit **141** executes a detection process of information outside the user's car on the basis of data or a signal from each component of the vehicle control system **100**. For example, the vehicle exterior information detection unit **141** executes a detection process, a recognition process, and a tracking process of an object around the user's car as well as a detection process of the distance to the object. Examples of the object to be detected include a vehicle, a person, an obstacle, a structure, a road, a traffic light, a traffic sign, a road sign, and the like.

[0142] In addition, the vehicle exterior information detection unit **141** executes a detection process of the environment around the user's car. Examples of the surrounding environment to be detected include weather, temperature, humidity, brightness, a state of a road surface, and the like. The vehicle exterior information detection unit **141** supplies data indicating the results of the detection process to the self-position estimation unit **132**, a map analysis unit **151**, a traffic rule recognition unit **152**, and a situation recognition

unit **153** of the situation analysis unit **133**, an emergency avoidance unit **171** of the motion control unit **135**, and the like.

[0143] The vehicle interior information detection unit **142** executes a detection process of information inside the vehicle on the basis of data or signals from the components of the vehicle control system **100**. For example, the vehicle interior information detection unit **142** executes an authentication process and a recognition process of the driver, a detection process of the state of the driver, a detection process of the occupant, a detection process of the environment inside the vehicle, and the like. Examples of the state of the driver to be detected include physical conditions, alertness, concentration, fatigue, a visual line direction, and the like. Examples of the environment inside the vehicle to be detected include the temperature, humidity, brightness, odor, and the like. The vehicle interior information detection unit **142** supplies data indicating the results of the detection process to the situation recognition unit **153** of the situation analysis unit **133**, the emergency avoidance unit **171** of the motion control unit **135**, and the like.

[0144] The vehicle state detection unit **143** executes a detection process of the state of the user's car on the basis of data or signals from the components of the vehicle control system **100**. Examples of the state of the user's car to be detected include the velocity, the acceleration, the steering angle, the presence/absence and details of abnormality, the state of driving operation, the position and inclination of a power seat, the state of a door lock, the state of other on-board devices, and the like. The vehicle state detection unit **143** supplies data indicating the results of the detection process to the situation recognition unit **153** of the situation analysis unit **133**, the emergency avoidance unit **171** of the motion control unit **135**, and the like.

[0145] The self-position estimation unit **132** executes an estimation process of a position, an orientation, and the like of the user's car on the basis of data or signals from the components of the vehicle control system **100**, such as the vehicle exterior information detection unit **141** and the situation recognition unit **153** of the situation analysis unit **133**.

[0146] In addition, the self-position estimation unit **132** generates a local map used for estimating the self-position (hereinafter, referred to as a self-position estimation map) as necessary. The self-position estimation map is a highly accurate map using, for example, a technique such as SLAM (Simultaneous Localization and Mapping).

[0147] The self-position estimation unit **132** supplies data indicating the results of the estimation process to the map analysis unit **151**, the traffic rule recognition unit **152**, and the situation recognition unit **153** of the situation analysis unit **133** and the like. In addition, the self-position estimation unit **132** causes the storage unit **111** to store the self-position estimation map.

[0148] The situation analysis unit **133** executes an analysis process of the situation of the user's car and the surroundings. The situation analysis unit **133** includes the map analysis unit **151**, the traffic rule recognition unit **152**, the situation recognition unit **153**, and a situation prediction unit **154**.

[0149] The map analysis unit **151** executes an analysis process of various maps stored in the storage unit **111** while using data or signals from the components of the vehicle control system **100**, such as the self-position estimation unit **132** and the vehicle exterior information detection unit **141**, as necessary and constructs a map including information necessary for the process of automatic drive. The map analysis unit **151** supplies the constructed map to, for example, the traffic rule recognition unit **152**, the situation recognition unit **153**, and the situation prediction unit **154** as well as a route planning unit **161**, an action planning unit **162**, and a motion planning unit **163** of the planning unit **134**.

[0150] The traffic rule recognition unit **152** executes a recognition process of traffic rules around the user's car on the basis of data or signals from the components of the vehicle control system **100**, such as the self-position estimation unit **132**, the vehicle exterior information detection unit **141**, and the map analysis unit **151**. As a result of the recognition process, for example, the position and the state of signals around the user's car, the details of traffic regulations around the user's car, driving lanes that can be traveled, and the like are recognized. The traffic rule recognition unit **152** supplies data indicating the results of the recognition process to the situation prediction unit **154** and the like.

[0151] The situation recognition unit **153** executes a recognition process of the situation regarding the user's car on the basis of data or signals from the components of the vehicle control system **100**, such as the self-position estimation unit **132**, the vehicle exterior information detection unit **141**, the vehicle interior information detection unit **142**, the vehicle state detection unit **143**, and the map analysis unit **151**. For example, the situation recognition unit **153** executes a recognition process of the situation of the user's car, the situation around the user's car, the situation of the driver of the user's car, and the like. In addition, the situation recognition unit **153** generates a local map used for recognizing the situation around the user's car (hereinafter, referred to as a situation recognition map) as necessary. The situation recognition map is, for example, an occupancy grid map.

[0152] Examples of the situations of the user's car to be recognized include the position, the orientation, and the motion (for example, a velocity, an acceleration, a movement direction, and the like) of the user's car as well as the presence/absence and the details of abnormality. Examples of the situation around the user's car to be recognized include a type and a position of a surrounding stationary object, a type, a position, and motion (for example, a velocity, an acceleration, a movement direction, and the like) of a surrounding moving object, a configuration of a surrounding road, the state of the road surface, and the weather, the temperature, the humidity, and the brightness of the surroundings. Examples of the state of the driver to be recognized include physical conditions, alertness, concentration, fatigue, motion of a visual line, and driving operation.

[0153] The situation recognition unit **153** supplies data (including the situation recognition map as necessary) indicating the results of the recognition process to the self-position estimation unit **132**, the situation prediction unit **154**, and the like. In addition, the situation recognition unit **153** causes the storage unit **111** to store the situation recognition map.

[0154] The situation prediction unit **154** executes a prediction process of the situation regarding the user's car on the basis of data or signals from the components of the

vehicle control system **100**, such as the map analysis unit **151**, the traffic rule recognition unit **152**, and the situation recognition unit **153**. For example, the situation prediction unit **154** executes a prediction process of the situation of the user's car, the situation around the user's car, the situation of the driver, and the like.

[0155] The situation of the user's car to be predicted includes, for example, behavior of the user's car, generation of abnormality, a possible travel distance, and the like. The situation around the user's car to be predicted includes, for example, behavior of a moving object around the user's car, change in the state of a signal, change in the state of the environment such as the weather, and the like. The situation of the driver to be predicted includes, for example, behavior and physical conditions of the driver, and the like.

[0156] The situation prediction unit **154** supplies data indicating the results of the prediction process to, for example, the route planning unit **161**, the action planning unit **162**, and the motion planning unit **163** of the planning unit **134** along with the data from the traffic rule recognition unit **152** and the situation recognition unit **153**.

[0157] The route planning unit **161** plans a route to the destination on the basis of data or signals from the components of the vehicle control system **100** such as the map analysis unit **151** and the situation prediction unit **154**. For example, the route planning unit **161** sets the route from the current position to the designated destination on the basis of the global map. In addition, the route planning unit **161** appropriately changes the route on the basis of, for example, the situation of a traffic jam, an accident, a traffic regulation, a construction work, and the like, the physical conditions of the driver, and the like. The route planning unit **161** supplies data indicating the planned route to the action planning unit **162** and the like.

[0158] The action planning unit **162** plans actions of the user's car for safely traveling the route planned by the route planning unit **161** in a planned period of time on the basis of data or signals from the components of the vehicle control system **100** such as the map analysis unit **151** and the situation prediction unit **154**. For example, the action planning unit **162** plans start, stop, a traveling direction (for example, forward, backward, left turn, right turn, change of the direction, and the like), a driving lane, a traveling speed, passing, and the like. The action planning unit **162** supplies data indicating the planned actions of the user's car to the motion planning unit **163** and the like.

[0159] The motion planning unit **163** plans motions of the user's car for realizing the actions planned by the action planning unit **162** on the basis of data or signals from the components of the vehicle control system **100** such as the map analysis unit **151** and the situation prediction unit **154**. For example, the motion planning unit **163** plans acceleration, deceleration, a traveling path, and the like. The motion planning unit **163** supplies data indicating the planned motions of the user's car to an acceleration and deceleration control unit **172** and a direction control unit **173** of the motion control unit **135**, and the like.

[0160] The motion control unit **135** controls the motions of the user's car. The motion control unit **135** includes the emergency avoidance unit **171**, the acceleration and deceleration control unit **172**, and the direction control unit **173**.

[0161] The emergency avoidance unit **171** executes a detection process of emergency, such as collision, contact, entry into a danger zone, abnormality of a driver, and abnormality of a vehicle, on the basis of the detection results of the vehicle exterior information detection unit **141**, the vehicle interior information detection unit **142**, and the vehicle state detection unit **143**. The emergency avoidance unit **171** plans motions of the user's car for avoiding emergency, such as sudden stop and sharp turn, in a case where emergency is detected. The emergency avoidance unit **171** supplies data indicating the planned motions of the user's car to the acceleration and deceleration control unit **172**, the direction control unit **173**, and the like.

[0162] The acceleration and deceleration control unit **172** controls the acceleration and the deceleration for realizing the motions of the user's car planned by the motion planning unit **163** or the emergency avoidance unit **171**. For example, the acceleration and deceleration control unit **172** computes control target values of the driving force generation apparatus or the braking apparatus for realizing the planned acceleration, deceleration, or sudden stop and supplies a control command indicating the computed control target values to the drive control unit **107**.

[0163] The direction control unit **173** controls the direction for realizing the motions of the user's car planned by the motion planning unit **163** or the emergency avoidance unit **171**. For example, the direction control unit **173** computes control target values of the steering mechanism for realizing the traveling path or sharp turn planned by the motion planning unit **163** or the emergency avoidance unit **171** and supplies a control command indicating the computed control target values to the drive control unit **107**.

<1-2-2. Configuration of Output Control Unit>

[0164] FIG. **9** is a block diagram illustrating a functional configuration example of the output control unit **105** of FIG. **8**. At least part of functional units illustrated in FIG. **9** is realized by executing a predetermined program.

[0165] The output control unit **105** includes an information superimposition appropriate visual field setting unit **201**, a superimposition target frame selection unit **202**, a display control unit **203**, and a content acquisition unit **204**.

[0166] The information superimposition appropriate visual field setting unit **201** analyzes an image obtained by imaging the scene in the traveling direction of the vehicle. The information superimposition appropriate visual field setting unit **201** is supplied with, for example, a scene image taken by the camera included in the data acquisition unit **102**.

[0167] The information superimposition appropriate visual field setting unit **201** sets information superimposition possible frames on the wall surfaces of buildings in the scene image. The information superimposition possible frame is a region of the surface (region corresponding to the surface) of an object, such as a building, in which the content can be superimposed.

[0168] In addition, the information superimposition appropriate visual field setting unit **201** selects predetermined frames of the information superimposition possible frames as information superimposition appropriate frames that are frames suitable for superimposing the content.

[0169] That is, the content is not superimposed on all of the information superimposition possible frames, and the information superimposition possible frames suitable for superimposing the content are selected according to the traveling state and the like. Information regarding the information superimposition appropriate frames set by the infor-

mation superimposition appropriate visual field setting unit **201** is supplied to the superimposition target frame selection unit **202**. Information of the analysis results of the scene image is appropriately supplied from the information superimposition appropriate visual field setting unit **201** to the display control unit **203**.

[0170] The superimposition target frame selection unit **202** selects a superimposition location of the content acquired by the content acquisition unit **204** from the information superimposition appropriate frames set by the information superimposition appropriate visual field setting unit **201**. Information regarding the information superimposition appropriate frame selected as the superimposition location of the content is supplied to the display control unit **203**.

[0171] The display control unit **203** applies image processing to the content according to the situation of the information superimposition appropriate frame selected as the superimposition location to adjust the appearance. In this way, the display control unit **203** has a function of generating visual information for displaying the content. In addition, the display control unit **203** controls the projection unit **106**A to superimpose, on the information superimposition appropriate frame, the content subjected to the image processing. The display control unit **203** projects the content to the region of the windshield G corresponding to the information superimposition appropriate frame to display the content.

[0172] The content acquisition unit **204** reads the content from the storage unit **111** to acquire the content. For example, content acquired from a server not illustrated is stored in the storage unit **111**. The content acquired by the content acquisition unit **204** is supplied to the superimposition target frame selection unit **202** and the display control unit **203**.

[0173] In this way, the content is displayed by executing the process of the information superimposition appropriate visual field setting unit **201** as a process of a first stage, executing the process of the superimposition target frame selection unit **202** as a process of a second stage, and executing the process of the display control unit **203** as a process of a third stage.

[0174] Hereinafter, details of the processes of the stages will be described along with configurations of components of the information superimposition appropriate visual field setting unit **201**, the superimposition target frame selection unit **202**, and the display control unit **203**.

<1-2-3. Process of First Stage (Setting of Information Superimposition Appropriate Visual Field)>

[0175] FIG. **10** is a block diagram illustrating a configuration example of the information superimposition appropriate visual field setting unit **201** of FIG. **9**.

[0176] The information superimposition appropriate visual field setting unit **201** includes an image analysis unit **211**, a light state mode setting unit **212**, an object detection unit **213**, a frame setting unit **214**, and an appropriate visual field setting unit **215**.

[0177] The image analysis unit **211** analyzes a scene image obtained by imaging. As a result of the analysis of the scene image, the outlines of the buildings are detected, and the brightness (luminance) of the surroundings is detected. In addition, as a result of the analysis of the scene image, the state of sunlight, the state of lighting, the state of atmosphere, and the like are also detected. Information indicating the analysis results of the image analysis unit **211** is supplied to the light state mode setting unit **212** and the object detection unit **213** and is also supplied to the display control unit **203**.

[0178] The light state mode setting unit **212** sets a light state mode on the basis of information supplied from the image analysis unit **211**. For example, one of a "daytime mode," a "dusk mode," and a "night mode" is set as the light state mode.

[0179] For example, the "daytime mode" is set when the sun is in the sky so that the surroundings are bright. The "dusk mode" is set when the surroundings are a little dark, such as in the evening and at dawn. The "night mode" is set when the sun is set so that the surroundings are dark.

[0180] A reference threshold of brightness is set for each mode. The light state mode setting unit **212** compares the brightness of the surroundings specified by analyzing the image and the brightness as the threshold to set the light state mode according to the current situation of brightness. Information regarding the light state mode set by the light state mode setting unit **212** is supplied to the frame setting unit **214**.

[0181] The light state mode setting unit **212** may set the light state mode on the basis of the detection results of the sensors included in the data acquisition unit **102**, instead of the analysis results of the scene image. In addition, the light state mode may be set with reference to the current time or the like.

[0182] The object detection unit **213** acquires the map data and plots the buildings with detected outlines on the map to thereby generate a three-dimensional model of the buildings which are along the driving road and are included in the visual field of the user.

[0183] For example, the driving road is specified on the basis of position measurement results of the GNSS receiver included in the data acquisition unit **102**. The map data supplied to the object detection unit **213** may be stored in the storage unit **111** or may be acquired from a server not illustrated.

[0184] FIG. **11** is a diagram illustrating an example of the three-dimensional model of the objects along the road.

[0185] In the example of FIG. **11**, buildings are lined up on the left and right of a linear road traveled by the user's vehicle. Such a three-dimensional model including the data of the outlines of the buildings is generated by the object detection unit **213**. The three-dimensional model also includes data of outlines of objects other than the buildings included in the scene image, such as trees and telephone poles.

[0186] In a case where the map data supplied to the object detection unit **213** includes not only information regarding the position of each building, but also information regarding the height and the like of the building, the three-dimensional model as illustrated in FIG. **11** may be generated on the basis of the map data. In this case, the object detection unit **213** determines whether or not the buildings on the map data actually exist on the basis of the analysis results of the scene image of the image analysis unit **211** and identifies the positions of the buildings that actually exist.

[0187] For example, a building existing on the map data may be destroyed. In a case where the same building as the building on the map data is not in the scene image, the object

detection unit **213** excludes the building from the target of superimposition of the content.

[0188] In this way, whether the objects exist can be checked on the basis of the scene image, thereby preventing superimposition of the content on a building not in the visual field of the user because the building is not actually there.

[0189] In general, the map data is updated every predetermined period, such as every year, and a building existing on the map data may not be there at the time of the traveling of the vehicle. Although the content looks floating in a case where the content is superimposed on the wall surface of the building that is not there at the time of the traveling of the vehicle, such an unnatural appearance can be prevented.

[0190] The object detection unit **213** outputs information of the three-dimensional model of the buildings actually in the scene image to the frame setting unit **214**.

[0191] The frame setting unit **214** sets the information superimposition possible frames on the wall surfaces of the buildings included in the visual field of the user on the basis of the three-dimensional model supplied from the object detection unit **213**. For example, planes with areas wider than a threshold are set as the information superimposition possible frames.

[0192] FIG. **12** is a diagram illustrating an example of setting the information superimposition possible frames.

[0193] In the example of FIG. **12**, an information superimposition possible frame F_**01** is set for a building on the near side on the right of a curve. In addition, there are three buildings on the left side along the curve, and information superimposition possible frames F_**02**, F_**03**, and F_**04** are set from the buildings on the near side. Note that the scene illustrated in FIG. **12** is a scene at a vehicle position A described later.

[0194] In this way, the information superimposition possible frames as candidates for the superimposition locations of the content are set on the basis of the three-dimensional model of the buildings viewed from the road traveled by the user's vehicle. The frame as the superimposition location of the content is selected from the information superimposition possible frames set by the frame setting unit **214**. Although one information superimposition possible frame is set on one surface of the building in FIG. **12**, a plurality of information superimposition possible frames may be set.

[0195] In addition, the frame setting unit **214** excludes the information superimposition possible frames not appropriate for the superimposition locations of the content among the information superimposition possible frames set in this way. The information superimposition possible frames are excluded on the basis of the light state mode set by the light state mode setting unit **212**, the brightness of each part of the building in the scene image analyzed by the image analysis unit **211**, and the like.

<Determination on Basis of Exclusion Rules>

Exclusion Rule 1

[0196] The frame setting unit **214** excludes parts in an intense light emitting state, such as a large monitor, from the information superimposition possible frames in all cases of the "daytime mode," the "dusk mode," and the "night mode." For example, parts of buildings with luminance equal to or greater than a threshold are specified as the parts in the intense light emitting state.

[0197] In this case, whether or not to exclude the part from the information superimposition possible frames is determined on the basis of absolute luminance of each part.

[0198] FIG. **13** is a diagram illustrating an example of the information superimposition possible frames excluded by the exclusion rule 1.

[0199] As illustrated in FIG. **13**, large monitors are installed on a part of a region A**1** in an upper section of a surface b**11-1** included in a building B**11** and a part of a region A**2** in an upper section of a surface b**12-2** included in a building B**12**. In this case, the part of the region A**1** and the part of the region A**2** are excluded from the information superimposition possible frames.

[0200] In a case where the content is superimposed on a part in the light emitting state, such as a large monitor, it may seem like the light is leaking from around the content. The part can be excluded from the information superimposition possible frames according to the exclusion rule 1 to prevent such an unnatural appearance.

Exclusion Rule 2

[0201] The frame setting unit **214** excludes, from the information superimposition possible frames, parts darkly shadowed due to the sunlight in the case of the "daytime mode." In a case where there are a part with high luminance caused by sunshine and a part in which the difference in luminance from the luminance of the part is equal to or greater than a threshold, the part with low luminance is specified as the part darkly shadowed due to the sunlight.

[0202] In this case, whether or not to exclude the part from the information superimposition possible frames is determined on the basis of the absolute luminance of each part and the difference in luminance from the surroundings.

[0203] FIG. **14** is a diagram illustrating an example of the information superimposition frames excluded by the exclusion rule 2.

[0204] As illustrated in FIG. **14**, it is assumed that the sunlight shines on the surface b**11-1** included in the building B**11**, and an entire surface b**11-2** that is another surface is shadowed so that the luminance difference between the surfaces is equal to or greater than the threshold. In this case, a part of a region A**11** of the surface b**11-2** with low luminance is excluded from the information superimposition possible frames.

[0205] Similarly, a part of a region A**12** of the surface b**12-2** included in the building B**12** and a part of a region A**13** of a surface b**13-2** included in a building B**13** are excluded from the information superimposition possible frames. The luminance difference is equal to or greater than the threshold between the upper section of the surface b**12-1** and the surface b**12-2** in the building B**12**, and the luminance difference is equal to or greater than the threshold between the upper section of the surface b**13-1** and the surface b**13-2** in the building B**13**.

[0206] The content is hard to see in a case where the content is superimposed on a shadow part where there is a very bright part in the surroundings. The part can be excluded from the information superimposition possible frames according to the exclusion rule 2 to ensure the visibility of the content.

Exclusion Rule 3

[0207] The frame setting unit **214** excludes parts that look particularly dark due to various reasons from the information superimposition possible frames in the case of the "dusk mode." For example, parts with luminance lower than a threshold are specified as the parts that look particularly dark.

[0208] In this case, whether or not to exclude the parts from the information superimposition possible frames is determined on the basis of the absolute luminance of each part as in the exclusion rule 1.

[0209] FIG. **15** is a diagram illustrating an example of the information superimposition possible frames excluded by the exclusion rule 3.

[0210] As illustrated in FIG. **15**, it is assumed that the luminance of a surface b**21-1** included in a building B**21** is lower than the threshold. In addition, it is assumed that a surface b**22-1** and a surface b**22-2** included in a building B**22** are shadowed by the building B**21**, and the luminance is lower than the threshold. In this case, parts of regions A**21-1** and A**21-2** of the surface b**21-1**, a part of a region A**22-1** of the surface b**22-1**, and a part of a region A**22-2** of the surface b**22-2** are excluded from the information superimposition possible frames.

[0211] In a case where the content is superimposed on the particularly dark part, the content is hard to see. The visibility of the content can also be ensured by excluding the information superimposition possible frames according to the exclusion rule 3.

[0212] Note that, although a surface that can be viewed on the front side of a building B**23** is a little dark in FIG. **15**, the surface is not a part that looks particularly dark. Therefore, the surface is not excluded.

Exclusion Rule 4

[0213] The frame setting unit **214** excludes parts darkly shadowed by illumination light from the information superimposition possible frames in the case of the "night mode." For example, in a case where there are a part with high luminance due to illumination light and a part in which the difference in luminance from the luminance of the part is equal to or greater than a threshold, the part with low luminance is specified as the part darkly shadowed by the illumination light.

[0214] In this case, whether or not to remove the part from the information superimposition possible frames is determined on the basis of the absolute luminance of each part and the difference in luminance from the surroundings as in the exclusion rule 2.

[0215] FIG. **16** is a diagram illustrating an example of the information superimposition possible frames excluded by the exclusion rule 4.

[0216] As illustrated in FIG. **16**, it is assumed that light from a street lamp L shines on a surface b**31-1** included in a building B**31**, and an entire surface b**31-2** that is another surface is shadowed so that the luminance difference between the surfaces is equal to or greater than a threshold. In this case, a part of a region A**31** of the surface b**31-2** with low luminance is excluded from the information superimposition possible frames.

[0217] Similarly, it is assumed that the light from the street lamp L shines on part of a surface b**32-1** included in a building B**32**, and another part is shadowed by the building B**31** so that the luminance difference between the parts is equal to or greater than the threshold. In this case, a part of a region A**32** with low luminance in the surface **32-1** is excluded from the information superimposition possible frames.

[0218] The content is hard to see in a case where the content is superimposed on a shadow part where there is a very bright part in the surroundings. The visibility of the content can also be ensured by excluding the information superimposition possible frames according to the exclusion rule 4.

Exclusion Rule 5

[0219] The frame setting unit **214** excludes parts in the light emitting state in outer walls of buildings and window parts in the light emitting state due to internal lighting or the like from the information superimposition possible frames in the case of the "night mode." For example, parts of buildings with luminance equal to or greater than a threshold are specified as the parts in the light emitting state.

[0220] In this case, whether or not to exclude the parts from the information superimposition possible frames is determined on the basis of the absolute luminance of each part.

[0221] FIG. **17** is a diagram illustrating an example of the information superimposition possible frames excluded by the exclusion rule 5.

[0222] As illustrated in FIG. **17**, it is assumed that parts of regions A**41-1** and A**41-2** of the surface b**11-1** included in the building B**11** and parts of regions A**41-3** and A**41-4** of the surface b**11-2** include windows, and the parts are in the light emitting state due to lighting in the room. In this case, the parts of the regions A**41-1** to A**41-4** are excluded from the information superimposition possible frames.

[0223] Similarly, a part of a region A**42** of the surface b**12-2** included in the building B**12** and a part of a region A**43** of the surface b**13-2** included in the building B**13** are excluded from the information superimposition possible frames. It is assumed that the parts also include windows, and the parts are in the light emitting state due to lighting in the room.

[0224] In a case where the surroundings are dark, it may seem like the light is leaking from around the content in a case where the content is superimposed on a window part or the like where the light inside the room is leaking. The information superimposition possible frames can be excluded according to the exclusion rule 5 to prevent such an unnatural appearance.

Exclusion Rule 6

[0225] The frame setting unit **214** excludes parts morally or customarily inappropriate for superimposing the content, such as a historical structure, a display object like a signboard, and an object at a sightseeing spot, from the information superimposition possible frames. The exclusion rule 6 is adopted in all of the cases of the "daytime mode," the "dusk mode," and the "night mode."

[0226] FIG. **18** is a diagram illustrating an example of the information superimposition possible frames excluded by the exclusion rule 6.

[0227] As indicated by regions A**51** and A**52** of FIG. **18**, for example, outer walls of a castle as a historical structure are excluded from the information superimposition possible frames.

[0228] The determination on the basis of the exclusion rule 6 is performed by the frame setting unit **214** on the basis of, for example, the information included in the map data. The scene image may be analyzed to detect a historical structure and the like to determine whether or not to remove the regions from the information superimposition possible frames.

[0229] The frame setting unit **214** excludes the information superimposition possible frames according to the rules described above and outputs information regarding the remaining (not excluded) information superimposition possible frames to the appropriate visual field setting unit **215**.

<Determination of Information Superimposition Appropriate Frames>

[0230] The appropriate visual field setting unit **215** of FIG. **10** determines whether or not the information superimposition possible frames set by the frame setting unit **214** and determined on the basis of the exclusion rules satisfy the following conditions 1 to 4.

[0231] Condition 1: The distance from the user, the angle with respect to the vehicle traveling direction, and the angular velocity in a user visual field calculated from the vehicle speed are within reference ranges.

[0232] Condition 2: The angle with respect to the vehicle traveling direction is equal to or greater than a minimum reference value.

[0233] Condition 3: The exposed area ratio is equal to or greater than a reference value in a case where the information superimposition possible frame can be viewed beyond a front object, such as a tree and a telephone pole.

[0234] Condition 4: The stay time in the user visual field is equal to or greater than a reference value.

[0235] Whether or not these conditions are satisfied is determined by appropriately using the analysis results of the scene image, the information regarding the road included in the map data, the traveling direction of the vehicle, the vehicle speed, and the like. Information regarding the current state of the vehicle, such as the traveling direction of the vehicle and the vehicle speed, is specified on the basis of, for example, information supplied from the situation analysis unit **133** and the like. In addition, information regarding the state of the vehicle in the future is specified on the basis of, for example, progress state prediction information supplied from the motion planning unit **163** and the like.

[0236] The appropriate visual field setting unit **215** sets the information superimposition possible frame satisfying all of the conditions 1 to 4 as an information superimposition appropriate frame. The information superimposition possible frame not satisfying at least any one of the conditions 1 to 4 is not selected as an information superimposition appropriate frame.

[0237] Although the determination of whether or not the conditions 1 to 4 are satisfied will be described, a specific example of a prerequisite state of the vehicle will be described first.

[0238] FIG. **19** is a diagram illustrating an example of transition of the vehicle position.

[0239] FIG. **19** illustrates a state of transition in the position of the vehicle traveling a curve to the right, as viewed from a plane. A rectangle with rounded corners on the road represents the vehicle, and a rectangle on both sides of the road represents a building. There is one building inside the curve, and the information superimposition possible frame F_**01** is set on the surface on the road side of the building. In addition, there are three buildings outside the curve, and the information superimposition possible frames F_**02**, F_**03**, and F_**04** are set on the buildings from the near side. In FIG. **19**, a thick line in the rectangle representing the building indicates the information superimposition possible frame.

[0240] Vehicle positions A to E represent the positions of the vehicle at each time. The vehicle sequentially travels on a trajectory connecting the vehicle positions A to E.

[0241] For example, based on the orientation of the vehicle at the vehicle position A, the direction change at the vehicle position B is expressed as 22.5°, and the direction change at the vehicle position C is expressed as 45° as illustrated in FIG. **20**. The direction change of the vehicle at the vehicle position D is expressed as 67.5°, and the direction change of the vehicle at the vehicle position E is expressed as 90°.

[0242] An interior angle of a sector indicated on the basis of the vehicle position represents a range of the visual field of the user at each position of the vehicle. For example, the visual field at the vehicle position A is indicated by a sector #**1**, and the visual field at the vehicle position B is indicated by a sector #**2**. The visual field at the vehicle position C is indicated by a sector #**3**. In this way, the scene viewed by the user changes according to the vehicle position and the direction of the vehicle.

[0243] The state of the vehicle at each time is generated at each timing on the basis of the current state of progress of the vehicle and the state of progress in the future. FIG. **19** illustrates the state of transition in the vehicle position generated at a timing that the vehicle is traveling at the vehicle position A. The states of the vehicle at the vehicle positions B to E are states predicted on the basis of the state of progress in the future. The state of progress in the future is indicated by the progress state prediction information input from the outside.

[0244] FIG. **21** depicts diagrams illustrating scene images at the vehicle positions.

[0245] For the convenience of description, it is assumed that the range of the scene image captured by the camera matches the range of the visual field of the user. The entire scene viewed by the user is imaged by the camera.

[0246] A of FIG. **21** illustrates a scene image at the vehicle position A. The scene image at the vehicle position A includes all of the information superimposition possible frames F_**01** to F_**04**. As indicated by the sector #**1** of FIG. **19**, the visual field of the user at the timing of traveling at the vehicle position A includes the information superimposition possible frames F_**01** to F_**04**.

[0247] In the state of A in FIG. **21**, respective trees are planted at the position in front of the building provided with the information superimposition possible frame F_**03** and at the position in front of the building provided with the information superimposition possible frame F_**04** in a manner that the trees partially overlap the information superimposition possible frames. Note that the scene illustrated in A of FIG. **21** is the same as the scene described with reference to FIG. **12**.

[0248] B of FIG. **21** illustrates a scene image at the vehicle position B. The current vehicle position is the vehicle position A, and therefore, the scene image illustrated in B of FIG. **21** represents a scene predicted to be viewed after a lapse of certain time.

[0249] The scene image at the vehicle position B includes the information superimposition possible frame F_**03** and the information superimposition possible frame F_**04**. As indicated by the sector #**2** in FIG. **19**, the visual field of the user at the timing of traveling at the vehicle position B includes the information superimposition possible frame F_**03** and the information superimposition possible frame F_**04**.

[0250] C of FIG. **21** illustrates a scene image at the vehicle position C. The current vehicle position is the vehicle position A, and therefore, the scene image illustrated in C of FIG. **21** represents a scene predicted to be viewed after an additional lapse of certain time from the timing of traveling at the vehicle position B.

[0251] The scene image at the vehicle position C includes the information superimposition possible frame F_**04**. As indicated by the sector #**3** in FIG. **19**, the information superimposition possible frame F_**04** is included on the left side of the visual field of the user at the timing of traveling at the vehicle position C.

[0252] At the timing of traveling at the vehicle positions D and E, all of the information superimposition possible frames F_**01** to F_**04** are out of the visual field of the user.

Determination of Condition 1

[0253] The appropriate visual field setting unit **215** determines that the condition 1 is satisfied in a case where the distance from the user, the angle with respect to the vehicle traveling direction, and the angular velocity in the user visual field calculated from the vehicle speed are within reference ranges. The angular velocity in the user visual field represents an angular velocity of the vehicle during the time that the information superimposition possible frame is within the visual field of the user on the basis of the position of each information superimposition possible frame.

[0254] FIG. **22** is a diagram illustrating an example of the angular velocity in the user visual field.

[0255] The example of FIG. **22** illustrates determination using the angular velocity in the user visual field during movement from the vehicle position A to the vehicle position B. In this case, as illustrated in FIG. **22**, the angular velocity in the user visual field of the information superimposition possible frame F_**01** is 41°/sec, and the angular velocity in the user visual field of the information superimposition possible frame F_**02** is 38°/sec. In addition, the angular velocity in the user visual field in the information superimposition possible frame F_**03** is 3°/sec, and the angular velocity in the user visual field of the information superimposition possible frame F_**04** is 8°/sec.

[0256] For example, in a case where an upper limit of the reference value of the angular velocity in the user visual field is 30°/sec, the information superimposition possible frame F_**01** and the information superimposition possible frame F_**02** exceeding the reference value do not satisfy the condition 1, and it is determined that the frames are inappropriate for the frames to be provided with the content.

[0257] In contrast, the information superimposition possible frame F_**03** and the information superimposition possible frame F_**04** within the range of the reference value satisfy the condition 1, and it is determined that the frames are appropriate for the frames to be provided with the content. The fact that the angular velocity in the user visual field is smaller than the reference value indicates that the amount of movement in the visual field of the user is small.

[0258] In this way, whether or not the frame is appropriate for the frame to be provided with the content can be determined on the basis of the condition 1 to select a frame with a small amount of movement in the visual field of the user, that is, a frame that can be easily viewed when the content is superimposed.

[0259] For example, in a case where the content is superimposed on the information superimposition possible frame with a large angular velocity in the user visual field, the movement of the content looks large. The determination on the basis of the condition 1 can prevent the superimposition of the content on the information superimposition possible frame that moves large in the visual field.

Determination of Condition 2

[0260] The appropriate visual field setting unit **215** determines that the condition 2 is satisfied in a case where the angle with respect to the vehicle traveling direction is equal to or greater than a minimum reference value.

[0261] FIG. **23** is a diagram illustrating an example of the angle with respect to the vehicle traveling direction.

[0262] As illustrated in FIG. **23**, the setting surface of the information superimposition possible frame F_**03** is indicated by a broken line L**1**, and the setting surface of the information superimposition possible frame F_**04** is indicated by a broken line L**2**. The information superimposition possible frame F_**01** and the information superimposition possible frame F_**02** are determined as inappropriate frames in the determination on the basis of the condition 1, and therefore, the determination on the basis of the condition 2 is not performed for the information superimposition possible frame F_**01** and the information superimposition possible frame F_**02**.

[0263] The angle of the information superimposition possible frame F_**03** with respect to the vehicle traveling direction at the vehicle position A is indicated by a sector #**11-1**, and the angle of the information superimposition possible frame F_**04** with respect to the vehicle traveling direction is indicated by a sector #**11-2**. The angles of the information superimposition possible frames with respect to the vehicle traveling direction are both 90°.

[0264] In the example, the information superimposition possible frame F_**03** and the information superimposition possible frame F_**04** are set on parallel surfaces, and the angles with respect to the vehicle traveling direction are the same angle at the same vehicle position. In a case where the frames are set on surfaces that are not parallel, the angles with respect to the vehicle traveling direction are different angles.

[0265] The angles of the information superimposition possible frames with respect to the vehicle traveling direction at each vehicle position are similarly obtained.

[0266] That is, the angle of the information superimposition possible frame F_**03** with respect to the vehicle traveling direction at the vehicle position B is indicated by a sector #**12-1**, and the angle of the information superimposition possible frame F_**04** with respect to the vehicle traveling direction is indicated by a sector #**12-2**. The angles of the

information superimposition possible frames with respect to the vehicle traveling direction are both 67.5°.

[0267] The angle of the information superimposition possible frame F_**04** with respect to the vehicle traveling direction at the vehicle position C is indicated by a sector #**13**. The angle of the information superimposition possible frame F_**04** with respect to the vehicle traveling direction is 45°. The determination using the angle of the information superimposition possible frame F_**03** with respect to the vehicle traveling direction is not performed because the frame is already out of the visual field of the user at the timing of traveling at the vehicle position C.

[0268] For example, in a case where the reference value of the minimum angle with respect to the vehicle traveling direction is 30°, the angles of the information superimposition possible frame F_**03** and the information superimposition possible frame F_**04** with respect to the vehicle traveling direction both exceed the reference value at the timing of traveling at the vehicle position A. The information superimposition possible frame F_**03** and the information superimposition possible frame F_**04** satisfy the condition 2, and it is determined that the frames are appropriate for the frames to be provided with the content.

[0269] In addition, both of the angles of the information superimposition possible frame F_**03** and the information superimposition possible frame F_**04** with respect to the vehicle traveling direction also exceed the reference value at the timing of traveling at the vehicle position B. The information superimposition possible frame F_**03** and the information superimposition possible frame F_**04** satisfy the condition 2, and it is determined that the frames are appropriate for the frames to be provided with the content.

[0270] The angle of the information superimposition possible frame F_**04** with respect to the vehicle traveling direction exceeds the reference value at the timing of traveling at the vehicle position C. The information superimposition possible frame F_**04** satisfies the condition 2, and it is determined that the frame is appropriate for the frame to be provided with the content.

[0271] An information superimposition possible frame in which the angle with respect to the vehicle traveling direction exceeds the reference value not only at one timing, but also at a plurality of timings may be determined to satisfy the condition 2.

[0272] The fact that the angle of the information superimposition possible frame with respect to the vehicle traveling direction is equal to or greater than the reference value indicates that the information superimposition possible frame is set in a direction close to the front of the user.

[0273] In this way, whether or not the frame is appropriate for the frame to be provided with the content can be determined on the basis of the condition 2 to select a frame set in a direction close to the front of the user, that is, a frame that can be easily viewed when the content is superimposed.

[0274] Determination of Condition 3 The appropriate visual field setting unit **215** determines that the condition 3 is satisfied in a case where the exposed area ratio is equal to or greater than a reference value when the information superimposition possible frame can be viewed beyond a front object, such as a tree and a telephone pole. The front object is an object in front of the information superimposition possible frame as viewed from the position of the user.

[0275] Note that the determination on the basis of the condition 3 may be performed in a case where the distance between the front object and a building (information superimposition possible frame) behind the front object is closer than a threshold. The distance between the front object and the building is specified on the basis of, for example, the three-dimensional model of the object generated by the object detection unit **213**.

[0276] FIGS. **24** and **25** are diagrams each illustrating an example of the exposed area ratio.

[0277] As illustrated in FIG. **24**, for example, there is a tree T**1** in front of the information superimposition possible frame F_**03** included in the visual field of the user, and there is a tree T**2** in front of the information superimposition possible frame F_**04** at the timing of traveling at the vehicle position A. As illustrated in FIG. **25**, the user views the information superimposition possible frames partially covered by the trees.

[0278] The exposed area ratio of the information superimposition possible frame F_**03** is indicated as a ratio of the area of the part (diagonal line part in FIG. **25**) not hidden by the tree T**1** to the area of the entire information superimposition possible frame F_**03**. The areas are obtained by, for example, the appropriate visual field setting unit **215** on the basis of the analysis results of the scene image. In this example, the exposed area ratio of the information superimposition possible frame F_**03** is 80%.

[0279] Similarly, the exposed area ratio of the information superimposition possible frame F_**04** is indicated as a ratio of the area of the part not hidden by the tree T**2** to the area of the entire information superimposition possible frame F_**04**. In this example, the exposed area ratio of the information superimposition possible frame F_**04** is 95%.

[0280] For example, in a case where the minimum reference value of the exposed area ratio is 60%, both of the exposed area ratios of the information superimposition possible frame F_**03** and the information superimposition possible frame F_**04** exceed the reference value at the timing of traveling at the vehicle position A. The information superimposition possible frame F_**03** and the information superimposition possible frame F_**04** satisfy the condition 3, and it is determined that the frames are appropriate for the frames to be provided with the content.

[0281] An information superimposition possible frame in which the exposed area ratio exceeds the reference value not only at one timing, but also at a plurality of timings may be determined to satisfy the condition 3.

[0282] The fact that the exposed area ratio is equal to or greater than the reference value indicates that a wide range of the information superimposition possible frame can be viewed from the user even in a case where there is an object on the near side.

[0283] In this way, whether or not the frame is appropriate for the frame to be provided with the content can be determined on the basis of the condition 3 to select a frame that can be easily viewed when the content is superimposed.

[0284] Determination of Condition 4 The appropriate visual field setting unit **215** determines that the condition 4 is satisfied in a case where the stay time in the user visual field is equal to or greater than a reference value.

[0285] FIG. **26** is a diagram illustrating an example of the stay time in the user visual field.

[0286] As illustrated in FIG. **26**, it is assumed that the time for traveling from the vehicle position A to the vehicle position B is two seconds. It is also assumed that the time for traveling from the vehicle position B to the vehicle position

C, the time for traveling from the vehicle position C to the vehicle position D, and the time for traveling from the vehicle position D to the vehicle position E are two seconds each. These times are obtained on the basis of the distance between the vehicle positions and on the basis of the predicted traveling speed.

[0287] In a case where the timing of the vehicle passing through the vehicle position A is set as a reference, the stay time in the user visual field of the information superimposition possible frame F_**03** is obtained as time from the reference timing to the timing of traveling at a position in front of the vehicle position C. Although the information superimposition possible frame F_**03** is not included in the visual field of the user at the vehicle position C indicated by the sector #**3**, the information superimposition possible frame F_**03** is continuously included in the visual field of the user up to the position in front of the vehicle position C. In this example, the stay time in the user visual field of the information superimposition possible frame F_**03** is 3.5 seconds.

[0288] Similarly, the stay time in the user visual field of the information superimposition possible frame F_**04** is obtained as time from the reference timing to the timing of traveling at a position in front of the vehicle position D. Although the information superimposition possible frame F_**04** is hardly included in the visual field of the user at the vehicle position D, the information superimposition possible frame F_**04** is continuously included in the visual field of the user up to the position in front of the vehicle position D. In the example, the stay time in the user visual field of the information superimposition possible frame F_**04** is 5.5 seconds.

[0289] For example, in a case where the reference value of the minimum stay time in the user visual field is 3.0 seconds, the stay time of both of the information superimposition possible frame F_**03** and the information superimposition possible frame F_**04** exceeds the reference value. The information superimposition possible frame F_**03** and the information superimposition possible frame F_**04** satisfy the condition 4, and it is determined that the frames are appropriate for the frames to be provided with the content.

[0290] The reference value of the stay time may be set according to the traveling speed. The reference value of 3.0 seconds described above is set in a case where, for example, the traveling speed is 5 m/sec (18 km/h).

[0291] The fact that the stay time is equal to or greater than the reference value indicates that the information superimposition possible frame continues to be in the visual field of the traveling user for a certain time.

[0292] In this way, whether or not the frame is appropriate for the frame to be provided with the content can be determined on the basis of the condition 4 to select a frame that can be continuously viewed for a certain time when the content is superimposed.

[0293] Whether or not the information superimposition possible frame is suitable for the superimposition of the content is determined on the basis of the conditions 1 to 4. Another condition, such as whether or not the area of the information superimposition possible frame is equal to or greater than a reference value, may be used to determine whether or not the information superimposition possible frame is suitable for the superimposition of the content.

[0294] With reference again to FIG. **10**, the appropriate visual field setting unit **215** selects the information superimposition possible frames satisfying all of the conditions 1 to 4 as information superimposition appropriate frames. The information superimposition possible frames satisfying at least any one of the conditions, instead of all of the conditions 1 to 4, may be selected as information superimposition appropriate frames.

[0295] The appropriate visual field setting unit **215** sets an information superimposition appropriate visual field on the basis of the information superimposition appropriate frames. The information superimposition appropriate visual field is a region of the visual field of the user suitable for the superimposition of the content. For example, a region inside a rectangle including all of the information superimposition appropriate frames in the visual field of the user is set as the information superimposition appropriate visual field.

[0296] FIG. **27** is a diagram illustrating an example of setting the information superimposition appropriate visual field.

[0297] As encircled by a thick line L**21**, a region inside a minimum rectangle surrounding the information superimposition possible frame F_**03** and the information superimposition possible frame F_**04** selected as the information superimposition appropriate frames is set as the information superimposition appropriate visual field. The information superimposition possible frame F_**03** and the information superimposition possible frame F_**04** included in the information superimposition appropriate visual field are used as the superimposition locations of the content.

[0298] Note that, in the example of FIG. **27**, the information superimposition possible frames included in the information superimposition appropriate visual field are the information superimposition possible frame F_**03** and the information superimposition possible frame F_**04** both determined to be the information superimposition appropriate frames. The information superimposition possible frames not determined to be the information superimposition appropriate frames in the determination on the basis of the conditions 1 to 4 may also be used as the superimposition locations of the content in a case where the frames are included in the information superimposition appropriate visual field.

[0299] In addition, the appropriate visual field setting unit **215** sets a region outside the information superimposition appropriate visual field as an information superimposition inappropriate visual field as illustrated in FIG. **27**. The information superimposition inappropriate visual field is not used for the superimposition of the content and is used for display of various messages, display of information representing the traveling state such as the traveling speed, and the like. The display of the velocity on the upper left illustrated in FIG. **2** and the like is display using the information superimposition inappropriate visual field.

[0300] The appropriate visual field setting unit **215** outputs information of all of the information superimposition appropriate frames included in the information superimposition appropriate visual field to the superimposition target frame selection unit **202**.

<1-2-4. Process of Second Stage (Selection of Information Superimposition Appropriate Frame as Superimposition Location)>

[0301] Next, selection of the superimposition location executed by the superimposition target frame selection unit **202** in the process of the second stage will be described.

[0302] FIG. **28** is a block diagram illustrating a configuration example of the superimposition target frame selection unit **202** of FIG. **9**.

[0303] The superimposition target frame selection unit **202** includes a pre-analysis unit **231**, a fitness calculation unit **232**, and a superimposition location setting unit **233**. The content acquired by the content acquisition unit **204** is input, to the pre-analysis unit **231**, as content to be displayed. In addition, the information of the information superimposition appropriate frames output from the information superimposition appropriate visual field setting unit **201** is input to the fitness calculation unit **232**.

[0304] The pre-analysis unit **231** performs pre-analysis of content information items for all of the content to be displayed and sets display position determination factors (Positioning Factors).

[0305] The content information items are metadata representing features of the content, and different items are provided for each type of content. Meanwhile, the display position determination factors are information regarding specifications required for the display of the content and are used for selecting the information superimposition appropriate frame as the superimposition location.

[0306] The pre-analysis unit **231** classifies each content into any one of content types including "moving image," "still image," and "character (text)." The classification of the content type is performed on the basis of, for example, an extension of the file of the content.

[0307] FIG. **29** depicts diagrams each illustrating an example of the content information items. Overlapping description will be appropriately omitted.

[0308] A of FIG. **29** illustrates content information items of text content with a file name "File_**01**."

[0309] As illustrated in A of FIG. **29**, the pre-analysis unit **231** sets items "Type," "Number of Letters," "Time for Reading," "Proportion," and "Time for Viewing" as the content information items of the text content.

[0310] "Type" represents the content type.

[0311] "Number of Letters" represents the number of letters included in the content.

[0312] "Time for Reading" represents the reading time. The reading time is set according to, for example, the number of letters.

[0313] "Proportion" represents the aspect ratio of the region required for displaying the content.

[0314] "Time for Viewing" represents the required time for viewing. In the case of the text content, the required time for viewing is set to the same time as the reading time.

[0315] In the example of A in FIG. **29**, "Number of Letters" is set to 42. In addition, "Time for Reading" is set to 10 seconds. "Proportion" is set to 4:3. "Time for Viewing" is set to 10 seconds which is the same as "Time for Reading."

[0316] In this case, the pre-analysis unit **231** sets "Proportion" of 4:3 and "Time for Viewing" of 10 seconds as the display position determination factors of the text content of "File_**01**."

[0317] B of FIG. **29** illustrates content information items of moving image content with a file name "File_**02**."

[0318] As illustrated in B of FIG. **29**, the pre-analysis unit **231** sets items "Type," "Playback Duration," "Proportion," and "Time for Viewing" as the content information items of the moving image content.

[0319] "Playback Duration" represents the reproduction time.

[0320] "Proportion" represents the aspect ratio of each frame included in the moving image content.

[0321] "Time for Viewing" represents the required time for viewing. In the case of the moving image content, the required time for viewing is set to the same time as the reproduction time.

[0322] In the example of B in FIG. **29**, "Playback Duration" is set to 20 seconds. In addition, "Proportion" is set to 16:9. "Time for Viewing" is set to 20 seconds which is the same as "Playback Duration."

[0323] In this case, the pre-analysis unit **231** sets "Proportion" of 16:9 and "Time for Viewing" of 20 seconds as the display position determination factors of the moving image content of "File_**02**." C of FIG. **29** illustrates content information items of still image content with a file name "File_**03**," and D of FIG. **29** illustrates content information items of still image content with a file name "File_**04**."

[0324] As illustrated in C and D of FIG. **29**, the pre-analysis unit **231** sets items "Type," "Text," "Number of Letters," "Time for Reading," "Proportion," and "Time for Viewing" as the content information items of the still image content.

[0325] "Text" indicates whether or not text elements are included in the image. For the content of "still image," the pre-analysis unit **231** analyzes the image to identify whether the image is a "still image" with text elements or a "still image" without text elements. The other content information items of the still image content with text elements are the same as the content information items of the text content.

[0326] In the example of C in FIG. **29**, "Text" is set as an image with text elements (Included). The still image content of "File_**03**" is still image content with text elements. In addition, "Number of Letters" is set to 28. "Time for Reading" is set to 7 seconds. "Proportion" is set to 3:4. "Time for Viewing" is set to 7 seconds which is the same as "Time for Reading."

[0327] In this case, the pre-analysis unit **231** sets "Proportion" of 3:4 and "Time for Viewing" of 7 seconds as the display position determination factors of the still image content of "File_**03**."

[0328] Meanwhile, "Text" is set as an image with text elements in the example of D in FIG. **29**. The still image content of "File_**04**" is also still image content with text elements. In addition, "Number of Letters" is set to 18. "Time for Reading" is set to 5 seconds. "Proportion" is set to 1:1. "Time for Viewing" is set to 5 seconds which is the same as "Time for Reading."

[0329] In this case, the pre-analysis unit **231** sets "Proportion" of 1:1 and "Time for Viewing" of 5 seconds as the display position determination factors of the still image content of "File_**04**."

[0330] The pre-analysis unit **231** outputs the information of the display position determination factors of each content set in this way to the fitness calculation unit **232**.

[0331] The fitness calculation unit **232** calculates the fitness of each combination of the content after the pre-analysis by the pre-analysis unit **231** and the information superimposition appropriate frame included in the information superimposition appropriate visual field. That is, the fitness of each of all of the contents and each of the

information superimposition appropriate frames included in the information superimposition appropriate visual field is calculated.

[0332] For example, the fitness calculation unit **232** specifies the aspect ratio and the stay time in the user visual field of each information superimposition appropriate frame on the basis of, for example, the information supplied from the information superimposition appropriate visual field setting unit **201**.

[0333] The fitness calculation unit **232** compares the specified aspect ratio and stay time in the user visual field with the display position determination factors of the content to calculate the fitness of the content and the information superimposition appropriate frame. As described above, the aspect ratio ("Proportion") and the required time for viewing ("Time for Viewing") are set as the display position determination factors.

[0334] FIG. **30** depicts diagrams each illustrating an example of the fitness.

[0335] Here, it is assumed that four information superimposition appropriate frames including information superimposition appropriate frames F_**11** to F_**14** are included in the information superimposition appropriate visual field. Frame_**11** to Frame_**14** illustrated in FIG. **30** represent the information superimposition appropriate frames F_**11** to F_**14**, respectively. It is assumed that the aspect ratios of the information superimposition appropriate frames F_**11** to F_**14** are 1:0.9, 3:4.2, 4:3.2, and 16:8, respectively, and the stay time in the user visual field is 4 seconds, 7 seconds, 14 seconds, and 17 seconds each.

[0336] A of FIG. **30** illustrates the fitness of the text content of "File_**01**" and each of the information superimposition appropriate frames F_**11** to F_**14**. The display position determination factors of the text content of "File_**01**" are the aspect ratio of 4:3 and the required time for viewing of 10 seconds as described above.

[0337] As illustrated in A of FIG. **30**, the pre-analysis unit **231** determines that the fitness of the aspect ratio is 20 on the basis of the aspect ratio of 4:3 for the text content and the aspect ratio of 1:0.9 for the information superimposition appropriate frame F_**11**. For example, the closer the ratios, the higher the obtained fitness.

[0338] In addition, the pre-analysis unit **231** determines that the fitness of the required time for viewing is 10 on the basis of the required time for viewing of 10 seconds for the text content and the stay time in the user visual field of 4 seconds for the information superimposition appropriate frame F_**11**. For example, the closer the required time and the stay time, the higher the obtained fitness.

[0339] The pre-analysis unit **231** adds the fitness of the aspect ratio and the fitness of the required time for viewing to determine that the overall fitness of the text content of "File_**01**" and the information superimposition appropriate frame F_**11** is 30.

[0340] Although the fitness of the aspect ratio and the fitness of the required time for viewing are added to obtain the overall fitness in this example, the method of obtaining the overall fitness is arbitrary, such as conducting the addition after weighting the fitness of one of them.

[0341] The pre-analysis unit **231** similarly calculates the fitness of each of the information superimposition appropriate frames F_**12** to F_**14** and the text content of "File_**01**."

[0342] In the example of A in FIG. **30**, the overall fitness of the text content of "File_**01**" and the information superimposition appropriate frame F_**12** is 30, and the overall fitness of the text content of "File_**01**" and the information superimposition appropriate frame F_**13** is 90. In addition, the overall fitness of the text content of "File_**01**" and the information superimposition appropriate frame F_**14** is 70.

[0343] The pre-analysis unit **231** similarly calculates the fitness of each of the moving image content of "File_**02**," the still image content of "File_**03**," and the still image content of "File_**04**" and each of the information superimposition appropriate frames F_**11** to F_**14**.

[0344] B of FIG. **30** illustrates the fitness of the moving image content of "File_**02**" and each of the information superimposition appropriate frames F_**11** to F_**14**. The display position determination factors of the moving image content of "File_**02**" are the aspect ratio of 16:9 and the required time for viewing of 20 seconds as described above.

[0345] In the example of B in FIG. **30**, the overall fitness of the moving image content of "File_**02**" and the information superimposition appropriate frame F_**11** is 0, and the overall fitness of the moving image content of "File_**02**" and the information superimposition appropriate frame F_**12** is 0. In addition, the overall fitness of the moving image content of "File_**02**" and the information superimposition appropriate frame F_**13** is 50, and the overall fitness of the moving image content of "File_**02**" and the information superimposition appropriate frame F_**14** is 80.

[0346] C of FIG. **30** illustrates the fitness of the still image content of "File_**03**" and each of the information superimposition appropriate frames F_**11** to F_**14**. The display position determination factors of the still image content of "File_**03**" are the aspect ratio of 3:4 and the required time for viewing of 7 seconds as described above.

[0347] In the example of C in FIG. **30**, the overall fitness of the still image content of "File_**03**" and the information superimposition appropriate frame F_**11** is 30, and the overall fitness of the still image content of "File_**03**" and the information superimposition appropriate frame F_**12** is 90. In addition, the overall fitness of the still image content of "File_**03**" and the information superimposition appropriate frame F_**13** is 60, and the overall fitness of the still image content of "File_**03**" and the information superimposition appropriate frame F_**14** is 50.

[0348] D of FIG. **30** illustrates the fitness of the still image content of "File_**04**" and each of the information superimposition appropriate frames F_**11** to F_**14**. The display position determination factors of the still image content of "File_**04**" are the aspect ratio of 1:1 and the required time for viewing of 5 seconds as described above.

[0349] In the example of D in FIG. **30**, the overall fitness of the still image content of "File_**04**" and the information superimposition appropriate frame F_**11** is 70, and the overall fitness of the still image content of "File_**04**" and the information superimposition appropriate frame F_**12** is 70. In addition, the overall fitness of the still image content of "File_**04**" and the information superimposition appropriate frame F_**13** is 70, and the overall fitness of the still image content of "File_**04**" and the information superimposition appropriate frame F_**14** is 60.

[0350] The fitness calculation unit **232** outputs the information of the fitness calculated in this way to the superimposition location setting unit **233**.

[0351] The superimposition location setting unit **233** sets the information superimposition appropriate frame as the superimposition location of each content according to the

fitness calculated by the fitness calculation unit **232**. For example, the superimposition location setting unit **233** sequentially allocates the information superimposition appropriate frames with high fitness to set the information superimposition appropriate frames as the superimposition locations.

[0352] FIG. **31** is a diagram illustrating an example of setting the superimposition locations.

[0353] The left side of FIG. **31** illustrates an example of calculating the fitness. Each fitness is appropriately ranked in a range from "Not Good" to "Very Good."

[0354] A table illustrated beyond an outline arrow is a table illustrating the overall fitness of each of the text content of "File_**01**," the moving image content of "File_**02**," the still image content of "File_**03**," and the still image content of "File_**04**" and each of the information superimposition appropriate frames F_**11** to F_**14**.

[0355] As encircled and indicated by an ellipse, the superimposition location setting unit **233** sets the information superimposition appropriate frame F_**13** with the highest fitness among the information superimposition appropriate frames F_**11** to F_**14** as the superimposition location of the text content of "File_**01**."

[0356] In addition, the superimposition location setting unit **233** sets the information superimposition appropriate frame F_**14** with the highest fitness among the information superimposition appropriate frames F_**11** to F_**14** as the superimposition location of the moving image content of "File_**02**."

[0357] The superimposition location setting unit **233** sets the information superimposition appropriate frame F_**12** with the highest fitness among the information superimposition appropriate frames F_**11** to F_**14** as the superimposition location of the still image content of "File_**03**."

[0358] The superimposition location setting unit **233** sets the information superimposition appropriate frame F_**11** with the highest fitness among the information superimposition appropriate frames F_**11** to F_**14** as the superimposition location of the still image content of "File_**04**."

[0359] Note that, although the fitness of the still image content of "File_**04**" and each of the information superimposition appropriate frames F_**11**, F_**12**, and F_**13** is 70, the information superimposition appropriate frame F_**11** not set as the superimposition location of any content is set here. The information superimposition appropriate frame F_**12** is already set as the superimposition location of the still image content of "File_**03**" on the basis of the fitness higher than 70, and the information superimposition appropriate frame F_**13** is already set as the superimposition location of the text content of "File_**01**" on the basis of the fitness higher than 70.

[0360] FIG. **32** is a diagram illustrating an example of the superimposition locations set in this way.

[0361] Buildings B**101** to B**103** are in a scene image illustrated in FIG. **32**. In the example of FIG. **32**, the information superimposition appropriate frame F_**11** and the information superimposition appropriate frame F_**12** described above are the information superimposition appropriate frames set for the building B**101** on the left side. The information superimposition appropriate frame F_**13** is the information superimposition appropriate frame set for the building B**102** at the center. The information superimposition appropriate frame F_**14** is the information superimposition appropriate frame set for the building B**103** on the right side.

[0362] In the case where the information superimposition appropriate frame as the superimposition location is set in this way, the still image content of "File_**04**," in which the calculated fitness with the information superimposition appropriate frame F_**11** is 70, is superimposed on the information superimposition appropriate frame F_**11**. Furthermore, the still image content of "File_**03**," in which the calculated fitness with the information superimposition appropriate frame F_**12** is 80, is superimposed on the information superimposition appropriate frame F_**12**.

[0363] The text content of "File_**01**," in which the calculated fitness with the information superimposition appropriate frame F_**13** is 90, is superimposed on the information superimposition appropriate frame F_**13**. The moving image content of "File_**02**," in which the calculated fitness with the information superimposition appropriate frame F_**14** is 80, is superimposed on the information superimposition appropriate frame F_**14**.

[0364] The superimposition location setting unit **233** outputs the information of the superimposition location of each content set in this way, that is, information indicating which information superimposition appropriate frame is to be provided with each content, to the display control unit **203**.

[0365] Although the fitness of the content and the information superimposition appropriate frame is calculated on the basis of the aspect ratio and the time of the content and the information superimposition appropriate frame in the description above, the fitness may be calculated on the basis of other elements. For example, the fitness may be calculated on the basis of only the aspect ratio or may be calculated on the basis of only the time (required time for viewing and stay time in the visual field).

[0366] That is, the fitness of the content and the information superimposition appropriate frame can be calculated on the basis of at least any one of the display position determination factors.

[0367] Furthermore, the moving image content may be superimposed on the information superimposition appropriate frame at a dark place, and the text content may be superimposed on the information superimposition appropriate frame at a bright place. In this way, the fitness may be calculated on the basis of other elements. In this case, the fitness is calculated on the basis of the luminance of the information superimposition appropriate frame and the type of content.

[0368] The fitness may be calculated so as to superimpose the moving image content on the information superimposition appropriate frame at a long distance and superimpose the text content on the information superimposition appropriate frame at a short distance. In this case, the fitness is calculated on the basis of the distance to the information superimposition appropriate frame and the type of content.

[0369] In this way, various methods can be adopted for the method of calculating the fitness of each content and the information superimposition appropriate frame.

[0370] Although the analysis of the content information items and the display position determination factors is performed by the vehicle control system **100**, the server side that manages the content may perform the analysis. The server provides the vehicle control system **100** with the

information regarding the content information items and the display position determination factors in association with the content.

<1-2-5. Process of Third State (Execution of Display)>

[0371] Next, a display process executed by the display control unit **203** in the process of the third stage will be described.

[0372] FIG. **33** is a block diagram illustrating a configuration example of the display control unit **203** of FIG. **9**.

[0373] The display control unit **203** includes a fitting contrast calculation unit **251**, a contrast adjustment unit **252**, a mask processing unit **253**, and a display processing unit **254**.

[0374] The analysis results of the scene image output from the information superimposition appropriate visual field setting unit **201** and the information regarding the information superimposition appropriate frame as the superimposition location of each content output from the superimposition target frame selection unit **202** are input to the fitting contrast calculation unit **251**. The content output from the content acquisition unit **204** is input to the contrast adjustment unit **252**, and the scene image is input to the mask processing unit **253**.

[0375] The fitting contrast calculation unit **251** calculates fitting contrast of each information superimposition appropriate frame on the basis of the context at the location of the information superimposition appropriate frame that is set as the superimposition location of the content. The fitting contrast is used to adjust the contrast of the content such that the appearance of the content becomes the same as the actual appearance at the location of the information superimposition appropriate frame.

[0376] The fitting contrast calculation unit **251** calculates the fitting contrast on the basis of, for example at least any one of the state of the sunlight, the state of the lighting, the state of the atmosphere, and the distance from the vehicle position. Although at least any one of the state of the sunlight, the state of the lighting, the state of the atmosphere, and the distance from the vehicle position is used as the context in this example, other states, such as weather and temperature, may be used as the context.

[0377] For example, the state of the sunlight, the state of the lighting, the state of the atmosphere, and the distance from the vehicle position are included in the analysis results of the scene image. The distance from the vehicle position to the location of the information superimposition appropriate frame may be acquired on the basis of detection results of a distance sensor.

[0378] The fitting contrast calculation unit **251** outputs the information regarding the fitting contrast of each information superimposition appropriate frame to the contrast adjustment unit **252**.

[0379] The contrast adjustment unit **252** adjusts the contrast of the content provided with the superimposition location according to the fitting contrast of the information superimposition appropriate frame as the superimposition location. The contrast adjustment unit **252** outputs the content after the adjustment of the contrast to the display processing unit **254**.

[0380] FIG. **34** is a diagram illustrating an example of the adjustment of the contrast on the basis of the fitting contrast.

[0381] The information superimposition appropriate frames F_**11** to F_**14** illustrated in FIG. **34** are the same as the information superimposition appropriate frames described with reference to FIG. **32**.

[0382] In the example of FIG. **34**, the information superimposition appropriate frame F_**11** is set on the wall surface of the building B**101** at a short distance. The sunlight shines on the wall surface provided with the information superimposition appropriate frame F_**11**, and the state of the sunlight of the information superimposition appropriate frame F_**11** is a sunny state. The state of the sunlight is specified on the basis of, for example, the luminance of the wall surface provided with the information superimposition appropriate frame F_**11**.

[0383] In this case, as illustrated at the tip of an extension line in FIG. **34**, the fitting contrast calculation unit **251** determines that the fitting contrast of the information superimposition appropriate frame F_**11** is 100% on the basis of the fact that the information superimposition appropriate frame F_**11** is at a short distance and the state of the sunlight is a sunny state.

[0384] Since the fitting contrast is 100%, the still image content of "File_**04**" with the superimposition location at the information superimposition appropriate frame F_**11** is superimposed on the information superimposition appropriate frame F_**11** at the original contrast without the adjustment of the contrast.

[0385] Meanwhile, the state of the sunlight of the information superimposition appropriate frame F_**12** set on the wall surface of the building B**101** at a short distance is a little shady state.

[0386] In this case, the fitting contrast calculation unit **251** determines that the fitting contrast of the information superimposition appropriate frame F_**12** is 60% on the basis of the fact that the information superimposition appropriate frame F_**12** is at a short distance and the state of the sunlight is a little shady state.

[0387] Since the fitting contrast is 60%, the contrast of the still image content of "File_**03**" with the superimposition location at the information superimposition appropriate frame F_**12** is reduced to 60%, and the content is superimposed on the information superimposition appropriate frame F_**12** in this state.

[0388] In a case where the actual appearance of the wall surface provided with the information superimposition appropriate frame F_**11** and the actual appearance of the wall surface provided with the information superimposition appropriate frame F_**12** are compared, the wall surface provided with the information superimposition appropriate frame F_**12** is shady, so that the wall surface looks darker with lower contrast. The contrast can be reduced according to the actual appearance of the wall surface to display the still image content of "File_**03**" in a state that the content is fit into the appearance of the wall surface provided with the content.

[0389] The information superimposition appropriate frame F_**13** is set on the wall surface of the building B**102** at a long distance. The state of the atmosphere of the information superimposition appropriate frame F_**13** is in a foggy state. The foggy state of the atmosphere is specified on the basis of, for example, the luminance and the contrast of the wall surface provided with the information superimposition appropriate frame F_**13**.

[0390] In this case, the fitting contrast calculation unit **251** determines that the fitting contrast of the information superimposition appropriate frame F_**13** is 10% on the basis of the

fact that the information superimposition appropriate frame F_**13** is at a long distance and the state of the atmosphere is a foggy state.

[0391] Since the fitting contrast is 10%, the contrast of the text content of "File_**01**" with the superimposition location at the information superimposition appropriate frame F_**13** is reduced to 10%, and the content is superimposed on the information superimposition appropriate frame F_**13** in this state.

[0392] In a case where the actual appearance of the wall surface provided with the information superimposition appropriate frame F_**11** and the actual appearance of the wall surface provided with the information superimposition appropriate frame F_**13** are compared, the contrast of the wall surface provided with the information superimposition appropriate frame F_**13** looks lower because the wall surface is at a long distance and looks blurry due to the fog. The contrast can be reduced according to the actual appearance of the wall surface to display the text content of "File_**01**" in a state that the content is fit into the appearance of the wall surface provided with the content.

[0393] The information superimposition appropriate frame F_**14** is set on the wall surface of the building B**103** at a short distance. The state of the sunlight of the information superimposition appropriate frame F_**14** is a sunny state.

[0394] In this case, the fitting contrast calculation unit **251** determines that the fitting contrast of the information superimposition appropriate frame F_**14** is 100% on the basis of the fact that the information superimposition appropriate frame F_**14** is at a short distance and the state of the sunlight is a sunny state as in the case of the information superimposition appropriate frame F_**11**.

[0395] Since the fitting contrast is 100%, the moving image content of "File_**02**" with the superimposition location at the information superimposition appropriate frame F_**14** is superimposed on the information superimposition appropriate frame F_**14** at the original contrast without the adjustment of the contrast.

[0396] In this way, the contrast of each content is adjusted on the basis of the fitting contrast calculated according to the actual appearance of the location of the information superimposition appropriate frame as the superimposition location. This allows the user to view the content as if the content is displayed on the wall surface of the actual building.

[0397] With reference again to FIG. **33**, in the case where the front object, such as a tree and a telephone pole, covers the information superimposition appropriate frame, the mask processing unit **253** executes a masking process to cut out the image of the front object from the scene image.

[0398] The masking process of the mask processing unit **253** is executed in a case where there is a front object overlapping the information superimposition appropriate frame. The mask processing unit **253** outputs, to the display processing unit **254**, a part image that is the image of the front object cut out by executing the masking process.

[0399] The display processing unit **254** controls the projection unit **106**A to superimpose each content on the information superimposition appropriate frame that is set as the superimposition location of each content.

[0400] In addition, the display processing unit **254** displays the part image supplied from the mask processing unit **253** on top of the content. The part image is displayed on top of the position where the front object is actually viewed. The display of the content and the like of the display processing unit **254** is repeated during the traveling of the vehicle.

[0401] FIG. **35** is a diagram illustrating an example of the display of the front object.

[0402] As illustrated on the left end of FIG. **35**, it is assumed that a tree in front of a building is covering the information superimposition appropriate frame set on the wall surface of the building at a timing of traveling at a certain position. A range indicated by a broken line on the left end of FIG. **35** is a range of the information superimposition appropriate frame. In this case, a colored range illustrated beyond an outline arrow #**31** is a range where the front object and the information superimposition appropriate frame overlap.

[0403] The mask processing unit **253** detects an external form of the front object and generates a mask image M as illustrated beyond an arrow #**41**. In addition, the mask processing unit **253** uses the mask image M to apply a masking process to the scene image to cut out a part image P of the front object.

[0404] As illustrated beyond an outline arrow #**32**, the display processing unit **254** superimposes the content on the information superimposition appropriate frame.

[0405] As described above, the display of content is performed by displaying the content on the windshield G, and as for the appearance viewed by the user, the user views the content on top of the front object as indicated beyond the outline arrow #**32**. Diagonal lines provided over the entire information superimposition appropriate frame illustrated beyond the outline arrow #**32** indicate that the entire content can be viewed without being covered by the front object.

[0406] The display processing unit **254** displays the part image P on top of the position of the front object to realize the display as if the content is displayed on the wall surface of the building behind the front object as illustrated beyond an outline arrow #**33**.

[0407] If the part image P is not displayed on top of the content, the content is viewed in front of the front object as illustrated beyond the outline arrow #**32**, and the content cannot be viewed as if the content is displayed on the wall surface of the building. The part image P can be displayed on top of the content to realize the appearance as if the content is displayed on the wall surface of the actual building without a sense of discomfort.

<<1-3. Motion of Vehicle Control System>>

[0408] Here, the motion of the vehicle control system **100** configured in this way will be described.

[0409] <1-3-1. Information Display Process>

[0410] First, an information display process as an overall process will be described with reference to a flow chart of FIG. **36**.

[0411] In step S**1**, the automatic drive control unit **112** controls the camera included in the data acquisition unit **102** to cause the camera to start imaging the scene in the traveling direction of the vehicle. The scene image obtained by imaging is supplied to the output control unit **105**.

[0412] In step S**2**, the automatic drive control unit **112** controls the sensors included in the data acquisition unit **102** to cause various sensors to start the measurement. The prediction or the like of the state of the vehicle is performed on the basis of the measurement results and the like of the

sensors. The information regarding the state of the vehicle is supplied as progress state prediction information to the output control unit **105**.

[0413] In step S**3**, the information superimposition appropriate visual field setting unit **201** executes the information superimposition appropriate visual field setting process that is the process of the first stage. As a result of the information superimposition appropriate visual field setting process, the information superimposition appropriate frames suitable for the superimposition of the content are selected. Details of the information superimposition appropriate visual field setting process will be described later with reference to flow charts of FIGS. **37** and **38**.

[0414] In step S**4**, the superimposition target frame selection unit **202** executes the superimposition target frame selection process that is the process of the second stage. As a result of the superimposition target frame selection process, the information superimposition appropriate frame as the superimposition location is set from among the information superimposition appropriate frames included in the information superimposition appropriate visual field. Details of the superimposition target frame selection process will be described later with reference to a flow chart of FIG. **39**.

[0415] In step S**5**, the display control unit **203** executes the display process that is the process of the third stage. As a result of the display process, the content is displayed. Details of the display process will be described later with reference to a flow chart of FIG. **40**.

[0416] The processes of steps S**3** to S**5** are repeated during the traveling of the vehicle.

<1-3-2. Information Superimposition Appropriate Visual Field Setting Process>

[0417] The information superimposition appropriate visual field setting process executed in step S**3** of FIG. **36** will be described with reference to the flow charts of FIGS. **37** and **38**.

[0418] In step S**11**, the image analysis unit **211** of the information superimposition appropriate visual field setting unit **201** analyzes the scene image. For example, the outlines of the buildings in the scene image are detected, and the brightness of the surroundings is detected.

[0419] In step **512**, the light state mode setting unit **212** sets any one of the light state modes including the "daytime mode," the "dusk mode," and the "night mode" on the basis of the brightness of the surroundings.

[0420] In step **513**, the object detection unit **213** determines the position of each object. That is, the object detection unit **213** plots the buildings, for which the outlines are detected, on the map and determines the positions of the buildings in the scene image. In addition, the object detection unit **213** determines the positions of the objects, such as trees, in addition to the buildings. The object detection unit **213** generates a three-dimensional mode of the objects for which the positions are determined.

[0421] In step **514**, the frame setting unit **214** sets the information superimposition possible frames on the surfaces of the objects.

[0422] In step **515**, the frame setting unit **214** excludes the inappropriate information superimposition possible frames according to the light state mode. Here, the information superimposition possible frames that look unnatural in the case where the content is superimposed are excluded in a manner as described above on the basis of the exclusion rules 1 to 4. The information of the information superimposition possible frames that are not excluded is supplied to the appropriate visual field setting unit **215**.

[0423] In step S**16**, the appropriate visual field setting unit **215** focuses on one information superimposition possible frame.

[0424] In step **517**, the appropriate visual field setting unit **215** calculates the angular velocity in the user visual field of the focused information superimposition possible frame.

[0425] In step S**18**, the appropriate visual field setting unit **215** determines whether or not the calculated angular velocity in the user visual field is in the reference range.

[0426] In a case where the appropriate visual field setting unit **215** determines that the angular velocity in the user visual field is in the reference range in step S**18**, the appropriate visual field setting unit **215** calculates the angle of the focused information superimposition possible frame with respect to the vehicle traveling direction in step S**19**.

[0427] In step S**20**, the appropriate visual field setting unit **215** determines whether or not the calculated angle with respect to the vehicle traveling direction is equal to or greater than the minimum reference value.

[0428] In a case where the appropriate visual field setting unit **215** determines that the angle with respect to the vehicle traveling direction is equal to or greater than the minimum reference value in step S**20**, the appropriate visual field setting unit **215** calculates the exposed area ratio of the focused information superimposition possible frame in step S**21**.

[0429] In step S**22**, the appropriate visual field setting unit **215** determines whether or not the calculated exposed area ratio is equal to or greater than the reference value.

[0430] In a case where the appropriate visual field setting unit **215** determines that the exposed area ratio is equal to or greater than the reference value in step S**22**, the appropriate visual field setting unit **215** calculates the stay time in the user's visual field of the focused information superimposition possible frame in step S**23**.

[0431] In step S**24**, the appropriate visual field setting unit **215** determines whether or not the calculated stay time in the user's visual field is equal to or greater than the reference value.

[0432] In a case where the appropriate visual field setting unit **215** determines that the stay time is equal to or greater than the reference value in step S**24**, the appropriate visual field setting unit **215** sets the focused information superimposition possible frame as the information superimposition appropriate frame in step S**25**.

[0433] Conversely, in a case where the appropriate visual field setting unit **215** determines that the angular velocity in the user visual field is not in the reference range in step S**18**, the appropriate visual field setting unit **215** sets the focused information superimposition possible frame as a frame inappropriate for the superimposition of information in step S**26**. This is similar in a case where the appropriate visual field setting unit **215** determines that the angle with respect to the vehicle traveling direction is not equal to or greater than the minimum reference value in step S**20**, in a case where the appropriate visual field setting unit **215** determines that the exposed area ratio is not equal to or greater than the reference value in step S**22**, or in a case where the appropriate visual field setting unit **215** determines that the stay time in the user's visual field is not equal to or greater than the reference value in step S**24**.

[0434] After the process of step S**25** or step S**26**, the appropriate visual field setting unit **215** determines whether or not all of the information superimposition possible frames are focused in step S**27**.

[0435] In a case where the appropriate visual field setting unit **215** determines that there are information superimposition possible frames not focused yet in step S**27**, the appropriate visual field setting unit **215** returns to step S**16** and focuses on another information superimposition possible frame to repeat the process. In a case where the appropriate visual field setting unit **215** determines that all of the information superimposition possible frames are focused in step S**27**, the process proceeds to step S**28**.

[0436] In step S**28**, the appropriate visual field setting unit **215** sets, as the information superimposition appropriate visual field, the region inside the rectangle including all of the information superimposition appropriate frames. The process then returns to step S**3** of FIG. **36**, and the subsequent process is executed.

<1-3-3. Superimposition Target Frame Selection Process>

[0437] The superimposition target frame selection process executed in step S**4** of FIG. **36** will be described with reference to the flow chart of FIG. **39**.

[0438] Note that the pre-analysis of the content is performed by the pre-analysis unit **231** in parallel with the process of FIG. **36**. The display position determination factors obtained in the pre-analysis process are supplied from the pre-analysis unit **231** to the fitness calculation unit **232**.

[0439] In step S**41**, the fitness calculation unit **232** of the superimposition target frame selection unit **202** focuses on one content to be displayed.

[0440] In step S**42**, the fitness calculation unit **232** calculates the fitness of the focused content and each of all of the information superimposition appropriate frames in the information superimposition appropriate visual field. The fitness is calculated with reference to, for example, the aspect ratio, the required time for viewing, and the like included in the display position determination factors as described above.

[0441] In step S**43**, the fitness calculation unit **232** determines whether or not all of the contents are focused.

[0442] In a case where the fitness calculation unit **232** determines that there are contents not focused yet in step S**43**, the fitness calculation unit **232** returns to step S**41** and focuses on another content to repeat the process. As a result, the fitness of each content and each of all of the information superimposition appropriate frames is calculated.

[0443] In a case where the fitness calculation unit **232** determines that all of the contents are focused in step S**43**, the superimposition location setting unit **233** sets the information superimposition appropriate frame as the superimposition location of each content on the basis of the fitness in step S**44**. The process then returns to step S**4** of FIG. **36**, and the subsequent process is executed.

<1-3-4. Display Process>

[0444] The display process executed in step S**5** of FIG. **36** will be described with reference to the flow chart of FIG. **40**.

[0445] In step S**51**, the fitting contrast calculation unit **251** of the display control unit **203** focuses on one content provided with the superimposition location.

[0446] In step S**52**, the fitting contrast calculation unit **251** calculates the fitting contrast on the basis of the context at the location of the information superimposition appropriate frame as the superimposition location.

[0447] In step S**53**, the contrast adjustment unit **252** adjusts the contrast of the focused content on the basis of the fitting contrast.

[0448] In step S**54**, the mask processing unit **253** executes the masking process to cut out the image of the front object in a case where there is an object in front of the information superimposition appropriate frame as the superimposition location of the focused content.

[0449] In step S**55**, the display processing unit **254** superimposes the content on the information superimposition appropriate frame.

[0450] In step S**56**, the display processing unit **254** appropriately displays the image of the front object on top of the content.

[0451] In step S**57**, the display control unit **203** determines whether or not all of the contents are focused.

[0452] In a case where the display control unit **203** determines that there are contents not focused yet in step S**57**, the display control unit **203** returns to step S**51** and focuses on another content to repeat the process.

[0453] In a case where the display control unit **203** determines that all of the contents are focused in step S**57**, the display control unit **203** returns to step S**5** of FIG. **36** and executes the subsequent process. As a result, all of the contents are superimposed on the information superimposition appropriate frames set as the superimposition locations.

[0454] As a result of the series of processes described above, the content can be displayed at optimal places in the scene, in a form that the content is fit into the scene. The user can view the content in a way similar to viewing a normal scene.

<1-3-5. Pre-Analysis Process>

[0455] The pre-analysis process of the content will be described with reference to a flow chart of FIG. **41**. The pre-analysis process is appropriately executed in parallel with the process of FIG. **36**.

[0456] In step S**101**, the pre-analysis unit **231** of the superimposition target frame selection unit **202** focuses on one content to be displayed among the contents supplied from the content acquisition unit **204**.

[0457] In step S**102**, the pre-analysis unit **231** classifies the focused content according to the content type on the basis of the extension of the file.

[0458] In a case where the content type of the focused content is "moving image," the pre-analysis unit **231** sets the aspect ratio and the required time for viewing as the display position determination factors in step S**103**.

[0459] In a case where the content type of the focused content is "still image," the pre-analysis unit **231** analyzes the focused still image content to determine whether or not there is a text element in step S**104**.

[0460] In step S**105**, the pre-analysis unit **231** determines whether or not a text element is included, and in a case where the pre-analysis unit **231** determines that a text element is not included, the pre-analysis unit **231** sets the aspect ratio as the display position determination factor in step S**106**.

[0461] Conversely, in a case where the pre-analysis unit **231** determines that a text element is included in step S**105**,

the pre-analysis unit **231** sets the aspect ratio and the required time for viewing as the display position determination factors in step S**107**.

[0462] In a case where the content type of the focused content is "character," the pre-analysis unit **231** sets the aspect ratio and the required time for viewing as the display position determination factors in step S**108**.

[0463] After setting the display position determination factors in steps S**103**, S**106**, and S**107** or in step S**108**, the pre-analysis unit **231** determines whether or not all of the contents are focused in step S**109**.

[0464] In a case where the pre-analysis unit **231** determines that there are contents not focused yet in step S**109**, the pre-analysis unit **231** returns to step S**101** and focuses on another content to repeat the process.

[0465] In a case where the pre-analysis unit **231** determines that all of the contents are focused in step S**109**, the pre-analysis process is finished. The information regarding the display position determination factors of each content is supplied from the pre-analysis unit **231** to the fitness calculation unit **232** and used for calculating the fitness.

[0466] Note that the process of each step described above may be appropriately executed in parallel with another process, or the process may be executed before or after another process by changing an order.

<<1-4. Modification>>

[0467] Although the moving body that the user is riding is a car in the description above, the moving body may be other moving bodies, such as a bicycle, a motorcycle, a train, and an airplane. The technique described above can be applied to the display of content in various moving bodies as long as a device serving as a display surface of the content is prepared for the moving body between the object and the user.

[0468] In addition, the technique can also be applied to the display of content in a case where the user wears a transmissive HMD and moves on foot. In this case, the HMD displays the content on top of the scene in the traveling direction.

[0469] Although different contents are superimposed in a case where there is a plurality of contents to be superimposed on the scene at a certain timing, one type of content may be superimposed on a plurality of information superimposition appropriate frames.

[0470] Although the image processing applied to the content on the basis of the context at the location of the information superimposition appropriate frame is the adjustment of the contrast, other processing, such as adjustment of luminance and adjustment of color, may be executed.

2. Second Embodiment

<<2-1. Summary of Second Embodiment>>

[0471] In the example described above, the information superimposition appropriate frames are set on the basis of the scene image in the traveling direction of the vehicle imaged by the camera included in the data acquisition unit **102**, and the content is superimposed and displayed on the set information superimposition appropriate frames.

[0472] However, the example is on the basis of the scene image captured by the camera, and the visual point of the user is not taken into account. Therefore, the appearance may become unnatural.

[0473] That is, the content existing in the visual line direction of the user should be in focus and clearly viewed, and the content out of the visual line direction should be defocused and viewed in a blurred state. However, this is not considered in the method described above. All of the contents are displayed such that the entire contents are clearly viewed regardless of the visual line direction, and the appearance may become unnatural.

[0474] Therefore, the user riding on the vehicle may be imaged to detect the visual point position of the user, and the content superimposed on the information superimposition appropriate frame according to the visual point position may be displayed by applying a defocusing process to the content such that the farther the position of the content from the visual point position, the more obscure the view of the content.

[0475] FIG. **42** depicts diagrams each describing a summary of a second embodiment of the vehicle control system **100** that displays the content by applying a defocusing process to the content to be superimposed on the information superimposition appropriate frame according to a visual point position EP of the user riding on the vehicle.

[0476] That is, the vehicle control system **100** of FIG. **42** is provided with a camera **271** that images a scene image in the traveling direction of the vehicle and a camera **272** that images a user **273** as an occupant inside the vehicle.

[0477] Furthermore, the output control unit **105** executes the series of processes described above to superimpose the content on the information superimposition appropriate frame on the basis of the scene image captured by the camera **271** and applies a defocusing process to the content to be displayed on the projection unit **106**A according to the distance from the visual point position EP on the projection unit **106**A of the user **273** inside the vehicle imaged by the camera **272**.

[0478] Here, the defocusing denotes processing executed in displaying the image, in which the image is processed into a state that the image is out of focus such that the image is obscurely displayed to the user.

[0479] That is, in the second embodiment of the present disclosure, a defocus range (Deforcus_Range) is set according to the distance from the user visual point position of the user **273**, and the content is displayed after processing the content into a state that the content is defocused in a degree corresponding to the defocus range.

[0480] As a result, even when the user moves the visual line, the content at a position close to the visual point position EP is displayed in a focused state with a small degree of defocus according to the motion of the visual line. The content at a position away from the visual point position EP is displayed in a defocused state according to the size of the distance from the visual point position EP. This can realize a natural view according to the visual line direction of the user.

<<2-2. Setting Example of Defocus Range>>

[0481] Next, a setting example of the defocus range will be described with reference to FIG. **43**.

[0482] The user **273** focuses on the visual point position to watch an object, with the visual point position at the object

in the visual line direction. Therefore, an object existing at a position away from the visual point position is in a defocused state.

[0483] Therefore, the defocus range is set according to a distance difference value that is a difference value of the distance between the position on the content and the visual point position of the user **273**.

[0484] For example, in a case considered here illustrated on the right side of FIG. **43**, an information superimposition appropriate frame **281**F is set on a side surface of a building **281**, and positions **281**A, **281**B, and **281**C are set in ascending order according to the distance from the visual point position of the user **273** on the information superimposition appropriate frame **281**F.

[0485] Here, FIG. **43** illustrates a setting example of the defocus range, and the right side of FIG. **43** illustrates an example of a scene in a case where there are buildings **281** and **282** on the left and right on the near side in the traveling direction of the user **273** riding on the vehicle. In addition, the left side of FIG. **43** illustrates a positional relationship between the user **273** and buildings **281** and **283** as viewed from above in the case where the scene on the right side of FIG. **43** is viewed.

[0486] In a case considered here illustrated on the left side of FIG. **43**, the visual line of the user **273** is toward the position **281**B. Hereinafter, the visual point position in the direction of the visual line of the user **273** will be referred to as a user visual point position. Therefore, as illustrated on the left side of FIG. **43**, the position **281**B is the user visual point position in a case where an arrow of a dotted line indicates the visual line of the user **273**.

[0487] In this case, the position **281**B on the information superimposition appropriate frame **281**F is the user visual point position, and therefore, it can be considered that the user **273** is watching and focusing on the position **281**B that is the user visual point position.

[0488] In other words, it can be considered that the user **273** is watching the scene in the defocused state at the positions **281**A and **281**C that are not the user visual point position on the information superimposition appropriate frame **281**F. It can be considered that the farther the distance from the user visual point position, the more defocused the content.

[0489] Therefore, as illustrated in FIG. **43**, the defocus range (Deforcus_Range) is set to 0% at the position **281**B that is the user visual point position. In addition, at the positions **281**A and **281**C away from the user visual point position, the defocus range (Deforcus_Range) is set to 0.1A % to 0.5A % according to the distance difference values that are values of the distances from the user visual point positions to the positions **281**A and **281**C.

[0490] That is, the larger the distance difference value between the user visual point position of the user **273** and the position, the larger the value set for the defocus range. The smaller the distance difference value, the smaller the value set for the defocus range. Therefore, the distance difference value is 0 at the position **281**B that is the user visual point position, and the defocus range is also set to 0.

[0491] In other words, the closer the position from the user visual point position, the smaller the value set for the defocus range. The farther the position from the user visual point position, the larger the value set for the defocus range.

[0492] Here, A in the setting example of the defocus range in FIG. **43** is a predetermined coefficient which can be arbitrarily set as a weight according to the defocus range and the distance difference value. That is, in a case where the coefficient A is small, a change in the distance difference value between the user visual point position and the position does not significantly change the defocus range, and the defocusing process for significantly obscurely displaying the scene is not executed at a position near the user visual point position. In contrast, in a case where the coefficient A is large, even a slight change in the distance difference value significantly changes the defocus range, and the defocusing process for obscurely displaying the content is executed even at a position near the user visual point position.

<<2-3. Setting Example of Defocus Ranges in Case where there is Plurality of Information Superimposition Appropriate Frames>>

[0493] Although there is one information superimposition appropriate frame in the setting example of the defocus range described above, the defocus ranges can be similarly set in a case where there is a plurality of information superimposition appropriate frames.

[0494] For example, in a case considered here illustrated in FIG. **44**, there is a plurality of buildings in the projection unit **106**A, and the information superimposition appropriate frames are set for the plurality of buildings.

[0495] FIG. **44** illustrates a scene including a road **290** on the front in the traveling direction of the vehicle. Buildings **291** to **293** are arranged in ascending order of a distance from the left side of the road **290**, and buildings **294** and **295** exist in ascending order of a distance from the right side of the road **290**.

[0496] Furthermore, in FIG. **44**, an information superimposition appropriate frame **291**A is set on a surface of the building **291** facing the traveling direction of the user, and star-shaped content **291***a* is superimposed and displayed. Here, it is assumed that a user visual point position **301** of the user **273** is substantially at the center of the content **291***a*. Therefore, the defocus range (Deforcus_Range) is set to 0% for the content **291***a* of the information superimposition appropriate frame **291**A.

[0497] Here, the distances from the user visual point position **301** to the images on the information superimposition appropriate frames projected by the projection unit **106**A and to the buildings **291** to **295** directly viewed in front in the traveling direction through the projection unit **106**A are in order of the buildings **291**, **292**, **293**, **294**, and **295** in ascending order.

[0498] In addition, an information superimposition appropriate frame **292**A is set on a surface of the building **292** facing the traveling direction of the user, and star-shaped content **292***a* is superimposed and displayed. The distance from the user visual point position **301** to the building **292** is farther than to the building **291**, and the defocus range (Deforcus_Range) is set to, for example, 1.0A % to 1.9A % for the content **292***a* of the information superimposition appropriate frame **292**A.

[0499] Furthermore, an information superimposition appropriate frame **294**A is set on a surface of the building **294** facing the road **290**, and star-shaped content **294***a* is superimposed and displayed. The distance from the user visual point position **301** to the building **294** is farther than to the building **292**, and the defocus range (Deforcus_Range) is set to, for example, 2.0A to 2.9A %, which are

values larger than the values for the content **292***a*, for the content **294***a* of the information superimposition appropriate frames **294**A.

[0500] In addition, an information superimposition appropriate frame **295**A is set on a surface of the building **295** facing the traveling direction of the user, and star-shaped content **295***a* is superimposed and displayed. The distance from the user visual point position **301** to the building **295** is farther than to the building **294**, and the defocus range (Deforcus_Range) is set to, for example, 3.0A % to 3.9A %, which are values larger than the values for the content **294***a*, for the content **295***a* of the information superimposition appropriate frame **295**A.

[0501] That is, the defocus range of the content **291***a* at the user visual point position **301** is set to the minimum value of 0%.

[0502] In addition, the defocus range of the content **292***a* in the information superimposition appropriate frame **292**A at the closest distance to the information superimposition appropriate frame **291**A as the user visual point position **301** is set to, for example, 1.0% to 1.9%.

[0503] Furthermore, the defocus range of the content **294***a* in the information superimposition appropriate frame **294**A at the second closest distance to the information superimposition appropriate frame **291**A as the user visual point position **301** is set to, for example, 2.0% to 2.9%.

[0504] In addition, the defocus range of the content **295***a* in the information superimposition appropriate frame **295**A at the third closest distance to the information superimposition appropriate frame **291**A as the user visual point position **301** is set to, for example, 3.0% to 3.9%.

[0505] Therefore, the content **291***a* is displayed in a focused state. The content **292***a* is displayed in a defocused state such that the defocus range corresponds to 1.0% to 1.9%, and the content **292***a* is displayed more obscurely for the user **273** compared to the content **291***a*.

[0506] In addition, the content **294***a* is displayed in a defocused state such that the defocus range corresponds to 2.0% to 2.9%, and the content **294***a* is displayed more obscurely for the user **273** compared to the content **292***a*.

[0507] Furthermore, the content **295***a* is displayed in a defocused state such that the defocus range corresponds to 3.0% to 3.9%, and the content **295***a* is displayed more obscurely for the user **273** compared to the content **294***a*.

[0508] That is, the degree of defocus increases in the order of the contents **292***a*, **294***a*, and **295***a*, and the contents are more obscurely displayed. In FIG. **44**, star shapes indicated by dotted lines express the defocused state. Note that, in FIG. **44**, the content **291***a* is displayed in a star shape with only solid lines, and this indicates that there is no deviation of focus. In addition, the content **292***a* is displayed in a star shape indicated by one solid line and one dotted line, and this expresses that the content **292***a* is more defocused and more obscurely displayed than the content **291***a*.

[0509] Furthermore, the content **294***a* is displayed in a star shape indicated by one solid line and two dotted lines, and this expresses that the content **294***a* is more defocused and more obscurely displayed than the content **292***a*.

[0510] Furthermore, the content **295***a* is displayed in a star shape indicated by one solid line and three dotted lines, and this expresses that the content **295***a* is more defocused and more obscurely displayed than the content **294***a*.

[0511] As a result of the display, the content **291***a* at the user visual point position **301** is displayed in the focused state, and the contents **292***a*, **294***a*, and **295***a* are displayed in the defocused, obscure, and blurred states according to the distance difference values between the user visual point position **301** of the user **273** and the respective positions. This can realize natural display corresponding to the visual line.

<<2-4. Configuration Example of Second Embodiment of Display Control Unit>>

<2-4-1. Configuration Example of Display Control Unit>

[0512] Next, a configuration example of the second embodiment of the output control unit **105** will be described with reference to FIG. **45**. However, in the configuration example of the second embodiment of the output control unit **105**, the difference from the configuration example of the first embodiment is the configuration of the display control unit **203**, and only the configuration of the display control unit **203** will be described.

[0513] Furthermore, in the display control unit **203** of FIG. **45**, the process of the display processing unit **254** is different from the process of the display control unit **203** in FIG. **33**, and the process of the display processing unit **254** will be described.

[0514] The display control unit **203** of FIG. **45** uses the scene image captured by the camera **271** that images the vehicle exterior, the map data stored in the storage unit **111** or map data acquired from a server not illustrated, and the information of the information superimposition appropriate frames to construct a pseudo-3D model on the memory space and generates, in the pseudo-3D model, wireframes corresponding to the information superimposition appropriate frames.

[0515] In addition, the display control unit **203** uses information of a coordinate system of the pseudo-3D model and the vehicle interior image captured by the camera **272** to obtain the defocus range at each position on the information superimposition appropriate frames superimposed on the wireframes in the pseudo-3D model and generates a defocus range map.

[0516] Furthermore, the display control unit **203** superimposes the content with adjusted contrast and the part images on the wireframes in the pseudo-3D model and reads the defocus range of each position from the defocus range map to execute a corresponding defocusing process. The display control unit **203** outputs the pseudo-3D model to the projection unit **106**A and causes the projection unit **106**A to display the pseudo-3D model.

<2-4-2. Configuration Example of Display Processing Unit of FIG. **45**>

[0517] Next, a detailed configuration example of the display processing unit **254** of FIG. **45** will be described with reference to FIG. **46**.

[0518] The display processing unit **254** of FIG. **45** includes a pseudo-3D model wireframe generation unit **321**, a content superimposition unit **322**, a defocus processing unit **323**, a visual point position detection unit **324**, a defocus range setting unit **325**, and a defocus range map storage unit **326**.

[0519] The pseudo-3D model wireframe generation unit **321** uses the road, the building, and the like corresponding to the space in the traveling direction of the vehicle to

construct a pseudo-3D model in the memory space on the basis of the scene image, the map data, and the information of the information superimposition appropriate frames. Furthermore, the pseudo-3D model wireframe generation unit **321** generates, in the constructed pseudo-3D model, corresponding wireframes on the basis of the information of the positions provided with the information superimposition appropriate frames and outputs the wireframes as pseudo-3D model wireframe information to the content superimposition unit **322**, the visual point position detection unit **324**, and the defocus range setting unit **325**.

[0520] The content superimposition unit **322** superimposes the content with adjusted contrast and the part images on the wireframes corresponding to the information superimposition appropriate frames in the pseudo-3D model and outputs the wireframes to the defocus processing unit **323**.

[0521] The defocus processing unit **323** accesses the defocus range map storage unit **326** and reads the set defocus range group for each wireframe corresponding to the information superimposition appropriate frame in the pseudo-3D model provided with the content with adjusted contrast and the part images. The defocus processing unit **323** applies the defocusing process to the image in the corresponding defocus range and outputs the image.

[0522] The visual point position detection unit **324** searches for the user visual point position from the vehicle interior image captured by the camera **272** and obtains the coordinate position on the 3D model wireframe. The visual point position detection unit **324** outputs the coordinate position to the defocus range setting unit **325**. More specifically, the visual point position detection unit **324** detects the face image of the user from the vehicle interior image captured by the camera **272**. Furthermore, the visual point position detection unit **324** specifies the iris positions of the eyes from the detected face image and detects, as the user visual point position, the visual point position on the projection surface of the projection unit **106**A on the basis of the positions of the irises.

[0523] The defocus range setting unit **325** sets the defocus range at each position in the wireframes corresponding to the information superimposition appropriate frames in the pseudo-3D model on the basis of the pseudo-3D model wireframe information and the information of the user visual point position to form a defocus range group for each wireframe and causes the defocus range map storage unit **326** to store the defocus range groups as a defocus range map regarding the plurality of information superimposition appropriate frames. Furthermore, in this case, the defocus range setting unit **325** also sets the defocus ranges for regions other than the wireframes. That is, the defocus range setting unit **325** sets the defocus ranges for all of the positions in the pseudo-3D model space and causes the defocus range map storage unit **326** to store the defocus ranges as a defocus range map.

[0524] The defocus range map storage unit **326** stores the defocus range map. The defocus processing unit **323** applies the defocusing process corresponding to the defocus ranges to the content supplied from the content superimposition unit **322**, in which the content with adjusted contrast and the part images are superimposed on the wireframes corresponding to the information superimposition appropriate frames in the pseudo-3D model space. The defocus processing unit **323** outputs the content.

<2-4-3. Display Process of Display Control Unit in FIG. **45**>

[0525] Next, the display process of the display control unit **203** in FIG. **45** will be described with reference to a flow chart of FIG. **47**.

[0526] In step S**201**, the pseudo-3D model wireframe generation unit **321** constructs the pseudo-3D model of the road, the buildings, and the like in the memory space on the basis of the scene image, the map data, and the information regarding the information superimposition appropriate frames. Furthermore, the pseudo-3D model wireframe generation unit **321** sets, in the pseudo-3D model, the wireframes corresponding to the information superimposition appropriate frames on the basis of the information of the positions provided with the information superimposition appropriate frames and outputs the wireframes as the pseudo-3D model wireframe information to the content superimposition unit **322**, the visual point position detection unit **324**, and the defocus range setting unit **325**.

[0527] In step S**202**, the visual point position detection unit **324** and the defocus range setting unit **325** execute the defocus range map generation process to generate the defocus range map and cause the defocus range map storage unit **326** to store the defocus range map.

<2-4-4. Defocus Range Map Generation Process of Display Control Unit in FIG. **45**>

[0528] Here, the defocus range map generation process of the display control unit **203** in FIG. **45** will be described with reference to a flow chart of FIG. **48**.

[0529] In step S**221**, the visual point position detection unit **324** acquires the vehicle interior image captured by the camera **272** and detects the face image of the user as an occupant. The visual point position detection unit **324** further detects the iris positions to estimate the visual line direction on the basis of the iris positions and specifies the user visual line position on the display surface of the projection unit **106**A.

[0530] In step S**222**, the visual point position detection unit **324** specifies the coordinate position of the user visual point position on the projection unit **106**A in the pseudo-3D model and outputs the coordinate position of the user visual point position to the defocus range setting unit **325**.

[0531] In step S**223**, the defocus range setting unit **325** sets, for each point in the pseudo-3D model, the defocus range corresponding to the difference value of a distance from the user visual point position to generate the defocus range map and causes the defocus range map storage unit **326** to store the defocus range map.

[0532] As a result of the process described above, the defocus range at each point of the 3D model is set, and the defocus ranges are stored as the defocus range map in the defocus range map storage unit **326**. In this case, continuous defocus ranges are set in the wireframes of the 3D model in the defocus range map, and the defocus range groups are formed on the basis of wireframes. The defocus ranges are stored in the defocus range map in this state.

[0533] Here, the flow chart of FIG. **47** will be further described.

[0534] In step S**202**, once the defocus range map is generated in the defocus range map generation process, the fitting contrast calculation unit **251** of the display control unit **203** focuses on one content provided with the superimposition location in step S**203**.

[0535] In step S**204**, the fitting contrast calculation unit **251** calculates the fitting contrast on the basis of the context at the location of the information superimposition appropriate frame as the superimposition location.

[0536] In step S**205**, the contrast adjustment unit **252** adjusts the contrast of the focused content on the basis of the fitting contrast.

[0537] In step S**206**, the mask processing unit **253** executes the masking process to cut out the image of the front object in a case where there is a front object in the information superimposition appropriate frame as the superimposition location of the focused content.

[0538] In step S**207**, the content superimposition unit **322** of the display processing unit **254** superimposes the content with adjusted contrast on the wireframe in the pseudo-3D model space corresponding to the information superimposition appropriate frame.

[0539] In step S**208**, the content superimposition unit **322** appropriately displays the image of the front object on top of the content and outputs the content to the defocus processing unit **323**.

[0540] In step S**209**, the defocus processing unit **323** accesses the defocus range map storage unit **326** and reads, from the defocus range map, the defocus range group corresponding to the frame provided with the focused content. In accordance with the focus range at each point on the frame, the defocus processing unit **323** applies the defocusing process to each point on the wireframe of the pseudo-3D model corresponding to the information superimposition appropriate frame provided with the content and outputs the frame.

[0541] In step S**210**, the display control unit **203** determines whether or not all of the contents are focused.

[0542] In a case where the display control unit **203** determines that there are contents not focused yet in step S**210**, the display control unit **203** returns to step S**203** to focus on another content and repeats the process described above.

[0543] In a case where the display control unit **203** determines that all of the contents are focused in step S**210**, all of the contents are superimposed on the wireframes of the pseudo-3D model corresponding to the information superimposition appropriate frames set as the superimposition locations. Once the defocusing process is executed, the process proceeds to step S**211**.

[0544] In step S**211**, the defocus processing unit **323** outputs the image subjected to the defocusing process according to the distances from the user visual point position in the state that all of the contents are superimposed on the information superimposition appropriate frames set as the superimposition locations. The defocus processing unit **323** outputs the image to the projection unit **106**A and causes the projection unit **106**A to display the image. The process returns to step S**5** of FIG. **36**, and the subsequent process is executed.

[0545] As a result of the series of processes described above, on the projection unit **106**A including the transmissive display, the contents are superimposed and displayed on the information superimposition appropriate frames such that the contents are fit into the scene. In this case, the closer the position of the content of the information superimposition appropriate frame to the user visual point position, the smaller the degree of defocus in the displayed image (more focused, sharp, and clear image). The farther the position of the content of the information superimposition appropriate frame from the user visual point position, the larger the degree of defocus in the displayed image (more defocused and obscure image).

[0546] As a result, the content can be displayed at optimal places in the scene in a form that the content is more fit into the scene. The user can watch the content in a way similar to viewing a normal scene.

[0547] Note that, although the defocus range of each point in the 3D model corresponding to the entire scene image is obtained to generate the defocus range map in the defocus range map generation process in the example described above, the defocusing process is actually applied only to the regions of the information superimposition appropriate frames provided with the content. Therefore, for the defocus range map, only the defocus range groups of the regions of the wireframes in the pseudo-3D model corresponding to the regions of the information superimposition appropriate frames may be obtained to form the defocus range map.

<<2-5. Modification>>

[0548] <2-5-1. Configuration Example of Display Processing Unit in Case where Projection Unit is Non-Transmissive Display>

[0549] Although the projection unit **106**A in FIG. **42** includes the transmissive display in the example of the case described above, the projection unit **106**A may include a non-transmissive display.

[0550] That is, the projection unit **106**A is the transmissive display in the description above, and the content is superimposed on the regions assumed to be the information superimposition appropriate frames described above. Therefore, the content is projected after applying the defocusing process only to the regions provided with the content that are assumed to be the information superimposition appropriate frames. Thus, the user watches the projected images in the regions assumed to be the information superimposition appropriate frames and directly views and watches the objects existing on the front side in the regions other than the regions assumed to be the information superimposition appropriate frames. In this way, the user watches the content displayed to naturally fit into the scene.

[0551] However, in a case of a non-transmissive display, the entire display displays, for example, the scene image captured by the camera **271**, and the content is superimposed and displayed in the regions of the information superimposition appropriate frames in the displayed scene image. That is, in the case where the content is displayed in the non-transmissive display, the user watches the images in the state in which the content is displayed on part of the images displayed on the entire display. Therefore, in the case of the non-transmissive display, the defocusing process corresponding to the user visual point position is necessary in the entire display region of the display.

[0552] Here, a configuration example of the display processing unit in the case where the projection unit is a non-transmissive display will be described with reference to FIG. **49**.

[0553] In the display processing unit **254** of FIG. **49**, the configuration different from the display processing unit **254** of FIG. **46** is that the information of the scene image is supplied to the defocus processing unit **323**, and the defocus processing unit **323** executes the defocusing process in the state in which the information of the information superimposition appropriate frames is superimposed.

[0554] That is, in the case where the projection unit **106**A is a non-transmissive display, the defocus processing unit **323** applies the defocusing process to the entire scene image in the state in which the information superimposition appropriate frames provided with the content are superimposed on the scene image captured by the camera **271**.

[0555] In this case, the defocus processing unit **323** uses all of the information of the defocus ranges set in the entire scene image stored in the defocus range map storage unit **326** and applies the defocusing process to the entire scene image in the state in which the information superimposition appropriate frames provided with the content are superimposed.

<2-5-2. Display Process in Case where Projection Unit is Non-Transmissive Display>

[0556] Next, a display process in the case where the projection unit **106**A is a non-transmissive display will be described with reference to a flow chart of FIG. **50**. Note that the process of steps S**241** to S**249** in FIG. **49** is similar to the process of steps S**201** to S**208** and S**210** in FIG. **47**, and the description will not be repeated.

[0557] That is, once the content is superimposed on all of the wireframes corresponding to the information superimposition appropriate frames in the pseudo-3D model in the process of steps S**241** to S**249**, the process proceeds to step S**250**.

[0558] In step S**250**, the defocus processing unit **323** attaches and superimposes the wireframes on the scene image captured by the camera **271** in the state in which the content is superimposed on all of the wireframes corresponding to the information superimposition appropriate frames in the pseudo-3D model.

[0559] In step S**251**, the defocus processing unit **323** applies the defocusing process to the entire scene image according to the defocus ranges. That is, here, the defocusing process with the defocus ranges corresponding to the difference values of distances from the user watching position is applied not only to the regions provided with the content on the wireframes corresponding to the information superimposition appropriate frames, but also to each position of the entire scene image in the pseudo-3D model.

[0560] In step S**252**, the defocus processing unit **323** outputs the scene image subjected to the defocusing process to the projection unit **106**A including the non-transmissive display and causes the projection unit **106**A to display the scene image. The process returns to step S**5** of FIG. **36**, and the subsequent process is executed.

[0561] That is, a display example of FIG. **51** illustrates an example in which the scene displayed on the projection unit **106**A on the basis of the transmissive display described with reference to FIG. **44** is displayed by a projection unit **106**A including a non-transmissive display.

[0562] That is, the scene is displayed by the projection unit **106**A including the transmissive display in the example of FIG. **44**, and therefore, the defocusing process is applied to only the respective star-shaped contents **292***a*, **294***a*, and **295***a* in the information superimposition appropriate frames **292**A, **294**A, and **295**A according to the distance from the user visual point position **301**.

[0563] In contrast, the scene is displayed by the projection unit **106**A including the non-transmissive display in the example of FIG. **51**, and the defocusing process is applied to the entire scene image including buildings **292'** to **295'** corresponding to the buildings **292** to **295** according to the distance from the user visual point position **301**. Therefore, the defocusing process is also applied to each of the information superimposition appropriate frames **292**A, **294**A, and **295**A similarly to the star-shaped contents **292***a*, **294***a*, and **295***a*. The defocusing process is also applied to other configurations. Note that, as for the defocusing process in the star-shaped contents **292***a*, **294***a*, and **295***a*, a similar defocusing process is executed regardless of whether the projection unit **106**A is a transmissive display or a non-transmissive display.

[0564] As a result, the content can be displayed at optimal places in the scene in a form that the content is more fit into the scene, and the user can watch the content in a way similar to viewing a normal scene.

3. Third Embodiment

<<3-1. Summary of Third Embodiment>>

[0565] Although the defocusing process is applied to the content on the information superimposition appropriate frames according to the difference values of distances from the user visual point position in the case where there is one user as an occupant in the example described above, defocusing processes may be executed according to respective user watching positions to allow respective users to watch images subjected to optimal defocusing processes in a case where there is a plurality of users as occupants.

[0566] FIG. **52** is a diagram describing a summary of a third embodiment of the vehicle control system **100** that defocuses the content superimposed on the information superimposition appropriate frames according to respective visual point positions (visual line directions) of a plurality of users riding on a vehicle and that displays the content to allow respective users to appropriately watch the content. Note that, in FIG. **52**, the description of the components with the same functions as the components in FIG. **42** will be appropriately omitted.

[0567] That is, FIG. **51** is different from FIG. **42** in that the users as occupants include three users **273-1** to **273-3**, cameras **272** include three cameras **272-1** to **272-3** accordingly, and a display unit **351** is provided in place of the projection unit **106**A.

[0568] The cameras **272-1** to **272-3** image the vehicle interior to image the users **273-1** to **273-3** as occupants, respectively, and supply the captured vehicle interior images to the output control unit **105**. In this case, as in the case where there is one occupant, the output control unit **105** specifies a user visual point position EP**1** of the user **273-1** from the image captured by the camera **272-1**, specifies a user visual point position EP**2** of the user **273-2** from the image captured by the camera **272-2**, and specifies a user visual point position EP**3** of the user **273-3** from the image captured by the camera **272-3**. Note that only one camera **272** may be included, and the camera **272** may be able to image the entire vehicle interior. In this way, a plurality of users may be detected from one image, and the respective user visual point positions EP**1** to EP**3** may be detected.

[0569] In addition, on the basis of the information of the respective user visual point positions EP**1** to EP**3** of the users **273-1** to **273-3**, the output control unit **105** generates scene images that allow the respective users **273-1** to **273-3** to watch the content in a state in which the content is naturally superimposed on the information superimposition appropri-

ate frames. The output control unit **105** integrates the scene images into one image in chronological order.

[0570] Furthermore, the output control unit **105** outputs the scene images integrated into one image in chronological order to the display unit **351** while changing the scene images in chronological order.

[0571] The display unit **351** is provided with a liquid crystal polarization shutter **361** in addition to the projection unit **106**A described above, and in displaying the images integrated into one scene image in chronological order, the output control unit **105** switches the polarization direction of the light transmitted by the liquid crystal polarization shutter **361** according to the timing of the display of the image to be watched by each of the users **273-1** to **273-3**. In this way, the scene image is displayed in the state that allows each of the users **273-1** to **273-3** to watch only the images appropriate for each user.

[0572] Here, the configuration of the display unit **351** will be described with reference to FIG. **53**. FIG. **53** illustrates the configuration in the case where the projection unit **106**A included in the display unit **351** includes, for example, the transmissive display, and FIG. **53** is a top view from vertically above the display surface of the display unit **351**.

[0573] In the case of FIG. **53**, the users **273-1** to **273-3** on the lower side of FIG. **53** view, through the projection unit **106**A, the scene on the upper side of FIG. **53** that is forward in the traveling direction. Therefore, the users **273-1** to **273-3** can watch forward in the traveling direction in the state in which the content is superimposed on the information superimposition appropriate frames on the projection unit **106**A. In this way, the users **273-1** to **273-3** can watch content such that the content is naturally fit into the scene.

[0574] Meanwhile, when the images including the content that is suitable for each of a plurality of persons and that is superimposed on the information superimposition appropriate frames generated for each of the plurality of persons are integrated into one image in chronological order, the image is displayed as illustrated on the upper side of FIG. **53**. That is, for example, an image for the user **273-1** indicated by Video_**01** is displayed at time t**1**, and an image for the user **273-2** indicated by Video_**02** is displayed at time t**2**. An image for the user **273-3** indicated by Video_**03** is displayed at time t**3**, and such display is repeated.

[0575] Therefore, when one image integrated in chronological order is displayed in a state without the liquid crystal polarization shutter **361**, each of the users **273-1** to **273-3** watches images not suitable for watching, two out of three times.

[0576] Therefore, the liquid crystal polarization shutter **361** is provided in a previous stage of the projection unit **106**A, and the output control unit **105** controls the integrated image according to the timing of display to switch the polarization direction.

[0577] That is, the output control unit **105** causes the projection unit **106**A to display the image for the user **273-1** at the timing of time t**1** and controls the liquid crystal polarization shutter **361** as indicated by a dotted line to polarize the light in a direction that allows only the user **273-1** to watch the image as indicated by arrows of dotted lines.

[0578] In addition, the output control unit **105** causes the projection unit **106**A to display the image for the user **273-2** at the timing of time t**2** and controls the liquid crystal polarization shutter **361** as indicated by a solid line to polarize the light in a direction that allows only the user **273-2** to watch the image as indicated by arrows of solid lines.

[0579] Furthermore, the output control unit **105** causes the projection unit **106**A to display the image for the user **273-3** at the timing of time t**3** and controls the liquid crystal polarization shutter **361** as indicated by a chain line to polarize the light in a direction that allows only the user **273-3** to watch the image as indicated by arrows of chain lines.

[0580] Subsequently, the output control unit **105** repeats similar control to control the display unit **351** to allow each of the users **273-1** to **273-3** to watch only the images suitable for the user to watch. Note that the dotted line, the solid line, and the chain line in the liquid crystal polarization shutter **361** in FIG. **53** express control states of the liquid crystal polarization shutter **361**, and the lines are not indicative of different shutters or the like.

[0581] According to the configuration described above, even when there is a plurality of users riding on the vehicle, the content can be displayed at optimal places in the scene in a state suitable for each user, in a form that the content is more fit into the scene. Each user can watch the content at each position in a way similar to viewing a normal scene.

<<3-2. Configuration Example of Vehicle Control System>>

<3-2-1. Overall Configuration of Vehicle Control System>

[0582] FIG. **54** is a block diagram illustrating a configuration example of the vehicle control system **100** according to the third embodiment. Note that, in the vehicle control system **100** of FIG. **54**, the same reference signs are provided to the components with the same functions as in the vehicle control system **100** of FIG. **8**, and the description thereof will be appropriately omitted.

[0583] That is, the vehicle control system **100** of FIG. **54** is different from the vehicle control system **100** of FIG. **8** in that the display unit **351** is provided in place of the projection unit **106**A.

[0584] The display unit **351** includes the projection unit **106**A and the liquid crystal polarization shutter **361** as described with reference to FIG. **53**.

[0585] The liquid crystal polarization shutter **361** switches the polarization direction to allow only the user **273** suitable for watching the image to watch the image according to the timing of display of the image when the images provided with the content on the information superimposition appropriate frames in the states respectively suitable for the plurality of users **273** are displayed as one image in chronological order.

[0586] Note that, although the projection unit **106**A may be a transmissive display or a non-transmissive display, the configuration and the process suitable for each display are necessary as described in the second embodiment. That is, in the case where the projection unit **106**A is a transmissive display, the display process as illustrated in the flow chart of FIG. **47** needs to be executed in the configuration of the display processing unit **254** as illustrated in FIG. **46**. Furthermore, in the case where the projection unit **106**A is a non-transmissive display, the display process as illustrated in the flow chart of FIG. **50** needs to be executed in the configuration of the display processing unit **254** as illustrated in FIG. **49**.

<3-2-2. Configuration of Display Processing Unit>

[0587] Next, the configuration of the display processing unit **254** in the output control unit **105** of the vehicle control system **100** of FIG. **54** will be described with reference to FIG. **55**. Note that, in the display processing unit **254** of FIG. **54**, the same reference signs are provided to the components with the same functions as in the display processing unit **254** of FIG. **46**, and the description thereof will be appropriately omitted.

[0588] That is, the difference from the display processing unit **254** of FIG. **46** is that the display processing unit **254** of FIG. **55** newly includes a buffer **371**, a combining unit **372**, a timing control unit **373**, a shutter control unit **374**, and a number-of-people detection unit **324***a* that detects the number of users in the visual point position detection unit **324**.

[0589] The buffer **371** buffers the images, which are generated by using the components from the pseudo-3D model wireframe generation unit **321** to the defocus range map storage unit **326**, generated according to each of the plurality of users **273** watching the images, provided with the content in the information superimposition appropriate frames, and subjected to the defocusing process according to the user watching position.

[0590] The combining unit **372** integrates and combines, in chronological order, the images, which are buffered by the buffer **371**, suitable for each of the plurality of users watching the images, provided with the content in the information superimposition appropriate frames, and subjected to the defocusing process according to the user watching position, and outputs the images to the timing control unit **373**. Note that the combining unit **372** integrates the images into one image in chronological order by including information for identifying the timing of the image to be displayed and the user **273** suitable for watching the image.

[0591] When the images integrated in chronological order are sequentially supplied, the timing control unit **373** recognizes any of the users **273** suitable for watching the images and causes the projection unit **106**A to sequentially display the images. The timing control unit **373** also controls the shutter control unit **374** to control the polarization direction of the liquid crystal polarization shutter **361** to the direction facing the corresponding user **273**.

[0592] The number-of-people detection unit **324***a* uses the vehicle interior image to detect the number of users on the basis of, for example, the number of face images detected by face detection or the like and notifies the defocus processing unit **323** of the number of users. Therefore, the defocus processing unit **323** applies the defocusing process to the images according to the supplied number of users.

[0593] Note that, although FIG. **55** illustrates the configuration of the case where the projection unit **106**A is a transmissive display, the scene image is input to the defocus processing unit **323** as in the display processing unit **254** of FIG. **49** in the case where the projection unit **106**A is a non-transmissive display. Furthermore, the defocus processing unit **323** attaches, to the scene image, the images provided with the content in the information superimposition appropriate frames and then applies the defocusing process to the entire scene image. Here, the configuration diagram of the display processing unit **254** corresponding to the non-transmissive display will not be illustrated.

<<3-3. Display Process of Display Processing Unit in FIG. **55**>>

[0594] Next, the display process of the display processing unit **254** of FIG. **55** will be described with reference to a flow chart of FIG. **56**.

[0595] In step S**291**, the defocus processing unit **323** initializes a counter m of an identifier for identifying the user to 1.

[0596] In step S**292**, the number-of-people detection unit **324***a* detects the number of users M as occupants from the images captured by the cameras **272-1** to **272-3**, sets the identifier m for each user, and supplies the detection result to the defocus processing unit **323**.

[0597] In step S**293**, the display process of the user identified by the identifier m among the users **273** is executed.

[0598] Here, the display process of the user m is, for example, the process of steps S**201** to **210** in FIG. **47** corresponding to a user **273**-*m* watching the image in the case where the projection unit **106**A is the transmissive display. The display process of the user m is a process of steps S**241** to **251** in FIG. **50** corresponding to a user m watching the image in the case where the projection unit **106**A is the non-transmissive display. That is, in the process, the defocusing process corresponding to the user visual point position of the user **273**-*m* is applied to generate the image in the state in which the content is superimposed on the information superimposition appropriate frames corresponding to the user **273**-*m* watching the image.

[0599] In step S**294**, the defocus processing unit **323** associates the image generated in the display process of the user m with the identifier m and causes the buffer **371** to buffer the image.

[0600] In step S**295**, the defocus processing unit **323** determines whether or not the counter m matches the number of people M, that is, whether or not the images corresponding to all of the users are generated.

[0601] In a case where the counter m does not match M in step S**295**, that is, in a case where the images corresponding to all of the users are not generated, the process proceeds to step S**296**.

[0602] In step S**296**, the defocus processing unit **323** increments the counter m by 1, and the process returns to step S**293**.

[0603] That is, the process of steps S**293** to S**296** is repeated until the images are buffered by the buffer **371** after generating the images by executing the display process for all of the users.

[0604] Furthermore, in a case where the counter m matches M after generating the images corresponding to all of the users in step S**295**, that is, in a case where it is assumed that the display process is executed for all of the users, the process proceeds to step S**297**.

[0605] In step S**297**, the combining unit **372** integrates the images, which are buffered by the buffer **371**, provided with the content on the information superimposition appropriate frames corresponding to all of the users, and subjected to the defocusing process according to the defocus range corresponding to the user watching position, into one image in chronological order.

[0606] In step S**298**, the timing control unit **373** sequentially supplies the integrated images to the projection unit **106**A to cause the projection unit **106**A to display the images and controls the shutter control unit **374** at a corresponding

timing to control the liquid crystal polarization shutter **361** to polarize the light in the direction that allows the target user **273** to watch the displayed image.

[0607] As a result of the process described above, even when a plurality of users is riding on the vehicle, the content can be displayed at optimal places in the scene in the state suitable for each user, in a form that the content is more fit into the scene. Each user can watch the content at each position in a way similar to viewing a normal scene.

<<3-4. Modification>>

[0608] In the description above, the liquid crystal polarization shutter **361** switches the polarization directions of the images projected on the projection unit **106**A to realize the plurality of users watching the images. Instead of using the liquid crystal polarization shutter **361**, the images suitable for the plurality of users watching the images, respectively, may be vertically divided in pixel order in the frame to combine the images into one image, and the images may be displayed through lenticular lenses to allow each of the plurality of users to watch the image.

[0609] FIG. **57** is a diagram illustrating a configuration example of the display unit **351** according to a modification. Note that the same reference signs are provided to the components with the same functions as in the display unit **351** of FIG. **53**, and the description thereof will be appropriately omitted.

[0610] That is, the display unit **351** of FIG. **57** is different from the display unit **351** of FIG. **53** in that lenticular lenses **381** are provided in place of the liquid crystal polarization shutter **361**.

[0611] Furthermore, as illustrated on the upper right in FIG. **57**, the image Video_**01** for the user **273-1**, the image Video_**02** for the user **273-2**, and the image Video_**03** for the user **273-3** are repeatedly arranged in a state in which the images are divided into regions C**1**, C**2**, and C**3** divided on the basis of columns formed in pixel order to thereby display the images combined into one image in the projection unit **106**A.

[0612] The lenticular lenses **381** selectively transmit the image Video_**01** in the direction that allows the user **273-1** to watch, selectively transmit the image Video_**02** in the direction that allows the user **273-2** to watch, and selectively transmit the image Video_**03** in the direction that allows the user **273-3** to watch, among the images displayed on the projection unit **106**A.

[0613] According to the configuration described above, even when a plurality of users is riding on the vehicle, the content can be displayed at optimal places in the scene in the state suitable for each user, in a form that the content is more fit into the scene. Each user can watch the content at each position in a way similar to viewing a normal scene.

<3-4-1. Configuration of Display Processing Unit>

[0614] Next, the configuration of the display processing unit **254** in the output control unit **105** of the vehicle control system **100** of FIG. **52** will be described with reference to FIG. **58**. Note that, in the display processing unit **254** of FIG. **57**, the same reference signs are provided to the components with the same functions as in the display processing unit **254** of FIG. **55**, and the description will be appropriately omitted.

[0615] That is, the display processing unit **254** of FIG. **58** is different from the display processing unit **254** of FIG. **55** in that a combining unit **391** is provided in place of the combining unit **372**, the timing control unit **373**, and the shutter control unit **374**.

[0616] The combining unit **391** divides the images that are buffered by the buffer **371** and that are respectively suitable for a plurality of users watching the images into regions on the basis of columns in pixel order and combines the images into one image. The combining unit **391** outputs the image to the projection unit **106**A of the display unit **351**.

[0617] The projection unit **106**A projects the image obtained by integrating, into one image, the images that are divided into regions on the basis of columns in pixel order and that are respectively suitable for the plurality of users watching the images. In this way, the projection unit **106**A projects the images through the lenticular lenses **381** in the state that allows each of the users **273** to appropriately watch the images.

[0618] Note that, although the projection unit **106**A may be a transmissive display or a non-transmissive display, the configuration and the process suitable for each display are necessary as described in the second embodiment. That is, in the case where the projection unit **106**A is a transmissive display, the display process as illustrated in the flow chart of FIG. **47** needs to be executed in the configuration of the display processing unit **254** as illustrated in FIG. **46**. Furthermore, in the case where the projection unit **106**A is a non-transmissive display, the display process as illustrated in the flow chart of FIG. **50** needs to be executed in the configuration of the display processing unit **254** as illustrated in FIG. **49**.

<3-4-2. Display Process of Display Processing Unit in FIG. **57**>

[0619] Next, the display process of the display processing unit **254** in FIG. **58** will be described with reference to a flow chart of FIG. **59**.

[0620] The process of steps S**311** to S**316** in the flow chart of FIG. **59** is similar to the process of steps S**291** to S**296** in the flow chart of FIG. **56**, and the description thereof will not be repeated.

[0621] That is, in the process of steps S**311** to S**316**, the display process corresponding to all of the users is executed, the content is superimposed on the information superimposition appropriate frames corresponding to all of the users, images are generated by executing the defocusing process according to the distances from the respective user visual point positions, and the images are buffered by the buffer **371**. The process then proceeds to step S**317**.

[0622] In step S**317**, the combining unit **391** divides the images, which are buffered by the buffer **371**, provided with the content on the information superimposition appropriate frames corresponding to all of the users, and subjected to the defocusing process in the defocusing ranges corresponding to the distances from the user watching positions, into regions on the basis of columns in predetermined pixel order. The combining unit **391** combines and integrates the images into one image as described with reference to FIG. **57**.

[0623] In step S**318**, the combining unit **391** causes the projection unit **106**A to project the image obtained by integrating, into one image, the images subjected to the defocusing process corresponding to the plurality of users and causes the projection unit **106**A to selectively polarize the light through the lenticular lenses **381** and project the

image. In this way, the plurality of users watches the images suitable for the respective users.

[0624] As a result of the process described above, even when a plurality of users is riding on the vehicle, the content can be displayed at optimal places in the scene image in the state suitable for each user, in a form that the content is more fit into the scene. Each user can watch the content at each position in a way similar to viewing a normal scene.

[0625] Note that, hereinafter, the process of the case where there is one user as in the second embodiment will be referred to as a single mode process, and the process of the case where there is a plurality of users as in the third embodiment will be referred to as a multi-mode process.

[0626] As described above, even just one camera **272** that captures the vehicle interior image can realize the multi-mode. Therefore, the single mode process and the multi-mode process may be switched and used by using one camera **272**.

[0627] In addition, although the process of displaying the image naturally fit into the scene in the traveling direction is mainly described above, the technique may also be used in a performance for prompting to watch a specific object.

[0628] That is, even in a state in which there is a plurality of users and the multi-mode process is executed, the control may be performed to allow all of the users to watch the same image according to the visual point position of a specific user.

[0629] For example, in a situation where a bus guide of a tourist bus or the like introduces a specific historical or famous spot, the defocusing process may be applied to the content superimposed on the information superimposition appropriate frames according to the user visual point position of the bus guide as a specific user, and all of the passengers of the bus that are users other than the specific user may be able to watch the image.

[0630] This allows a performance for naturally directing the visual line toward the historical or famous spot introduced by the bus guide now, and the guidance by the bus guide can be easily understood.

[0631] Furthermore, in stage production or the like, when the visual line is toward a thing that the stage director particularly wants the user to view, the image is defocused to allow the user to sharply watch the thing at the user visual point position that the stage director particularly wants the user to view. For other things, the images are more defocused to obscurely display the images, and the entire audience of the stage can watch the images. In this way, the technique can also be used for stage production and the like.

[0632] That is, in this case, the defocus range is set small for the thing that the stage director wants the user to watch, and a more focused sharp image can be recognized. In contrast, the defocus range is set large for a thing that the stage director does not want the user to watch, and the image can be watched more obscurely. As a result, the effect of the stage production can be increased.

[0633] Note that, although the number of users is three in the case described above, the number of users may be other numbers.

<Configuration Example of Computer>

[0634] The series of processes described above can be executed by hardware or can be executed by software. In a case where the series of processes are executed by software, a program included in the software is installed from a program recording medium to a computer incorporated into dedicated hardware, a general-purpose computer, or the like.

[0635] FIG. **60** is a block diagram illustrating a configuration example of hardware of a computer that uses a program to execute the series of processes. The computer illustrated in FIG. **60** executes a predetermined program to realize the functions of the components including the automatic drive control unit **112** illustrated in FIGS. **8** and **54**.

[0636] A CPU (Central Processing Unit) **1001**, a ROM (Read Only Memory) **1002**, and a RAM (Random Access Memory) **1003** are connected to each other through a bus **1004**.

[0637] An input-output interface **1005** is further connected to the bus **1004**. An input unit **1006** including a keyboard, a mouse, or the like and an output unit **1007** including a display, a speaker, or the like are connected to the input-output interface **1005**. In addition, a storage unit **1008** including a hard disk, a non-volatile memory, or the like, a communication unit **1009** including a network interface or the like, and a drive **1010** that drives a removable recording medium **1011** are connected to the input-output interface **1005**.

[0638] In the computer configured in this way, the CPU **1001** loads the program stored in, for example, the storage unit **1008** to the RAM **1003** through the input-output interface **1005** and the bus **1004** to execute the program to thereby execute the series of processes described above.

[0639] The program executed by the CPU **1001** is provided by, for example, recording the program in the removable recording medium **1011** or is provided through a wired or wireless transmission medium, such as a local area network, the Internet, and digital broadcasting, and the program is installed on the storage unit **1008**.

[0640] Note that the program executed by the computer may be a program for executing the processes in chronological order described in the present specification or may be a program for executing the processes in parallel or at a necessary timing such as when the processes are invoked.

[0641] The system in the present specification denotes a set of a plurality of constituent elements (apparatuses, modules (components), and the like), and whether or not all of the constituent elements are in the same housing does not matter. Therefore, a plurality of apparatuses stored in separate housings and connected through a network and one apparatus storing a plurality of modules in one housing are both systems.

[0642] Note that the advantageous effects described in the present specification are illustrative only, and the advantageous effects are not limited. There may also be other advantageous effects.

[0643] The embodiments of the present technique are not limited to the embodiments described above, and various changes can be made without departing from the scope of the present technique.

[0644] For example, the present technique can be provided as cloud computing in which a plurality of apparatuses shares one function and cooperates to execute a process through a network.

[0645] In addition, one apparatus can execute each step described in the flow charts, or a plurality of apparatuses can take charge and execute each step.

[0646] Furthermore, in the case where one step includes a plurality of processes, one apparatus can execute the plu-

rality of processes included in one step, or a plurality of apparatuses can take charge and execute the processes.

<Example of Combination of Configurations>

[0647] The present technique can also be configured as follows.

(1)

[0648] An information processing apparatus including:

[0649] a setting unit that sets a frame as a superimposition location of content in a region corresponding to a surface of an object on the basis of a movement state of a user; and

[0650] a display control unit that generates visual information for displaying the content in the region corresponding to the set frame.

(2)

[0651] The information processing apparatus according to (1), further including:

[0652] a prediction unit that predicts the movement state including a traveling route and a traveling speed of a moving body on which the user rides.

(3)

[0653] The information processing apparatus according to (1) or (2), further including:

[0654] a detection unit that detects the object by analyzing an image obtained by imaging a scene in a traveling direction.

(4)

[0655] The information processing apparatus according to any one of (1) to (3), in which

[0656] the setting unit sets the frame on the basis of angles toward the surface of the object from respective positions including a first position on a movement route and a second position after a lapse of predetermined time.

(5)

[0657] The information processing apparatus according to any one of (1) to (4), in which

[0658] the setting unit sets the frame on the basis of an angle of the surface of the object with respect to a traveling direction.

(6)

[0659] The information processing apparatus according to any one of (1) to (5), in which

[0660] the setting unit sets the frame on the basis of an exposed area of the surface of the object in a case where the surface of the object is blocked by another object in front.

(7)

[0661] The information processing apparatus according to any one of (1) to (6), in which

[0662] the setting unit sets the frame on the basis of time that the surface of the object is included in a visual field of the user obtained on the basis of the movement state.

(8)

[0663] The information processing apparatus according to any one of (1) to (7), further including:

[0664] a light state detection unit that detects a state of light on the surface of the object, in which

[0665] the setting unit sets the frame on the basis of the state of light.

(9)

[0666] The information processing apparatus according to any one of (1) to (8), further including:

[0667] a calculation unit that calculates fitness of each content and each frame on the basis of information regarding specifications required for displaying the content, in which

[0668] the display control unit generates the visual information for displaying each content in the region corresponding to the frame selected on the basis of the fitness.

(10)

[0669] The information processing apparatus according to (9), in which

[0670] the calculation unit calculates the fitness on the basis of an element that varies according to a type of the content.

(11)

[0671] The information processing apparatus according to (10), in which

[0672] in a case where the content is an image, the calculation unit calculates the fitness on the basis of a relationship between an aspect ratio of the image and an aspect ratio of the frame.

(12)

[0673] The information processing apparatus according to (11), in which

[0674] in a case where the content is a moving image, the calculation unit calculates the fitness also on the basis of a relationship between reproduction time of the moving image and time that the frame is included in a visual field of the user.

(13)

[0675] The information processing apparatus according to (10), in which

[0676] in a case where the content includes characters, the calculation unit calculates the fitness on the basis of at least any one of a relationship between an aspect ratio of a display range of the characters and an aspect ratio of the frame and a relationship between viewing time defined by the number of characters and the time that the frame is included in a visual field of the user.

(14)

[0677] The information processing apparatus according to any one of (1) to (13), in which

[0678] the display control unit applies a defocusing process to the visual information that is generated in the region corresponding to the set frame and is for displaying the content on the basis of a visual point position of the user riding on a moving body.

(15)

[0679] The information processing apparatus according to (14), further including:

[0680] an imaging unit that images the user riding on the moving body; and

[0681] a defocus range setting unit that sets a defocus range according to a distance between the specified visual point position of the user and each position of the region corresponding to the frame on the basis of an image taken by the imaging unit, in which

[0682] the display control unit applies, according to the defocus range, the defocusing process to the visual information that is generated in the region corresponding to the set frame and is for displaying the content on the basis of the visual point position of the user riding on the moving body.

(16)

[0683] The information processing apparatus according to (15), in which

[0684] the closer the distance between each position of the region corresponding to the frame and the visual point position of the user is, the smaller the defocus range set by the defocus range setting unit is, the farther the distance

between each position of the region corresponding to the frame and the visual point position of the user is, the larger the defocus range set by the defocus range setting unit is, and

[0685] the smaller the defocus range is, the higher a degree of focus in the defocusing process of the display control unit applied to the visual information that is generated in the region corresponding to the set frame and is for displaying the content on the basis of the visual point position of the user riding on the moving body is, the larger the defocus range is, the higher a degree of defocus in the defocusing process of the display control unit is.

(17)

[0686] The information processing apparatus according to any one of (14) to (16), in which

[0687] the setting unit sets, for each of a plurality of the users, the frame as the superimposition location of the content in the region corresponding to the surface of the object on the basis of the movement state of the user, and

[0688] the display control unit applies the defocusing process to the visual information that is generated in the region corresponding to the frame set for each of the plurality of the users and is for displaying the content.

(18)

[0689] An information processing method executed by an information processing apparatus, the method including:

[0690] setting a frame as a superimposition location of content in a region corresponding to a surface of an object on the basis of a movement state of a user; and

[0691] generating visual information for displaying the content in the region corresponding to the set frame.

(19)

[0692] A program for causing a computer to execute a process including:

[0693] setting a frame as a superimposition location of content in a region corresponding to a surface of an object on the basis of a movement state of a user; and

[0694] generating visual information for displaying the content in the region corresponding to the set frame.

(20)

[0695] A moving body including:

[0696] a setting unit that sets a frame as a superimposition location of content in a region corresponding to a surface of an object on the basis of a movement state of a user;

[0697] a display control unit that generates visual information for displaying the content in the region corresponding to the set frame; and

[0698] an output unit that displays the visual information.

(21)

[0699] The information processing apparatus according to any one of (1) to (13), further including:

[0700] an adjustment unit that adjusts contrast of the content on the basis of context of the frame, in which

[0701] the display control unit generates, in the region corresponding to the frame, the visual information for displaying the content with adjusted contrast.

(22)

[0702] The information processing apparatus according to (21), in which

[0703] the adjustment unit uses, as the context, at least any one of a state of sunlight, a state of lighting, a state of atmosphere, and the distance to the frame to adjust the contrast of the content.

(23)

[0704] The information processing apparatus according to (21) or (22), further including:

[0705] an image processing unit that cuts out, from the image obtained by imaging, a region of another object in front of the frame, in which

[0706] the display control unit generates the visual information for displaying an image of the region of the other object on top of the content with adjusted contrast.

REFERENCE SIGNS LIST

[0707] **105** Output control unit, **201** Information superimposition appropriate visual field setting unit, **202** Superimposition target frame selection unit, **203** Display control unit, **204** Content acquisition unit, **211** Image analysis unit, **212** Light state mode setting unit, **213** Object detection unit, **214** Frame setting unit, **215** Appropriate visual field setting unit, **231** Pre-analysis unit, **232** Fitness calculation unit, **233** Superimposition location setting unit, **251** Fitting contrast calculation unit, **252** Contrast adjustment unit, **253** Mask processing unit, **254** Display processing unit, **271**, **272**, **272-1** to **272-3** Camera, **321** Pseudo-3D model wireframe generation unit, **322** Content superimposition unit, **323** Defocus processing unit, **324** Visual point position detection unit, **324***a* Number-of-people detection unit, **325** Defocus range setting unit, **326** Defocus range map storage unit, **361** Liquid crystal polarization shutter, **371** Buffer, **372** Combining unit, 373 Timing control unit, **374** Shutter control unit, **381** Lenticular lens, **391** Combining unit

1. (canceled)

2: An information processing apparatus comprising:

circuitry configured to:

determine a superimposition location of content in a frame based on a visual field of view relative to a surface of an object, wherein the visual field of view includes an external environment of a vehicle;

perform a defocusing process on the content in the frame to generate a defocused content; and

generate visual information for displaying the defocused content on a display.

3: The information processing apparatus according to claim **2**, wherein

the circuitry is configured to perform the defocusing process on the content based on a visual point position of a user.

4: The information processing apparatus according to claim **3**, wherein

the circuitry is configured to set a defocus range based on a distance between the visual point position of the user and the superimposition location of the content in the frame, and

the circuitry is configured to perform the defocusing process on the content based on the set defocus range.

5: The information processing apparatus according to claim **4**, wherein

the smaller the distance between the visual point position of the user and the superimposition location of the content is, the smaller the defocus range set by the circuitry is, and the bigger the distance is, the larger the defocus range set by the circuitry is, and

the smaller the defocus range is, the higher a degree of focus in the defocusing process, and the larger the defocus range is, the higher a degree of defocus in the defocusing process.

6: The information processing apparatus according to claim **4**, wherein

the smaller the distance between the visual point position of the user and the superimposition location of the content is, the smaller the defocus range set by the circuitry is, and the bigger the distance is, the larger the defocus range set by the circuitry is.

7: The information processing apparatus according to claim **4**, wherein

the smaller the defocus range is, the higher a degree of focus in the defocusing process, and the larger the defocus range is, the higher a degree of defocus in the defocusing process.

8: The information processing apparatus according to claim **3**, wherein

the visual point position of the user is determined based on an image including an eye of the user, the image being generated by a camera mounted inside the vehicle.

9: The information processing apparatus according to claim **4**, wherein

the farther the distance between the visual point position of the user and the superimposition location of the content is, the more obscure a view of the content is.

10: An information processing method executed by an information processing apparatus, the method comprising:

determining a superimposition location of content in a frame based on a visual field of view relative to a surface of an object, wherein the visual field of view includes an external environment of a vehicle;

performing a defocusing process on the content in the frame to generate a defocused content; and

generating visual information for displaying the defocused content on a display.

11. The information processing method of claim **10**, further comprising:

performing the defocusing process on the content based on a visual point position of a user.

12. The information processing method of claim **11**, further comprising:

setting a defocus range based on a distance between the visual point position of the user and the superimposition location of the content in the frame; and

performing the defocusing process on the content based on the set defocus range.

13. The information processing method of claim **12**, wherein

the smaller the distance between the visual point position of the user and the superimposition location of the content is, the smaller the defocus range is set, and the bigger the distance is, the larger the defocus range is set, and

the smaller the defocus range is, the higher a degree of focus in the defocusing process, and the larger the defocus range is, the higher a degree of defocus in the defocusing process.

14. The information processing method of claim **12**, wherein

the smaller the distance between the visual point position of the user and the superimposition location of the content is, the smaller the defocus range set by the circuitry is, and the bigger the distance is, the larger the defocus range set by the circuitry is.

15. The information processing method of claim **12**, wherein

the smaller the defocus range is, the higher a degree of focus in the defocusing process, and the larger the defocus range is, the higher a degree of defocus in the defocusing process.

16. A non-transitory computer-readable storage medium storing executable instructions which when executed by circuitry cause the circuitry to perform a method, the method comprising:

determining a superimposition location of content in a frame based on a visual field of view relative to a surface of an object, wherein the visual field of view includes an external environment of a vehicle;

performing a defocusing process on the content in the frame to generate a defocused content; and

generating visual information for displaying the defocused content on a display.

17. The non-transitory computer-readable storage medium of claim **16**, further comprising:

performing the defocusing process on the content based on a visual point position of a user.

18. The non-transitory computer-readable storage medium of claim **17**, further comprising:

setting a defocus range based on a distance between the visual point position of the user and the superimposition location of the content in the frame; and

performing the defocusing process on the content based on the set defocus range.

19. The non-transitory computer-readable storage medium of claim **18**, wherein

the smaller the distance between the visual point position of the user and the superimposition location of the content is, the smaller the defocus range is set, and the bigger the distance is, the larger the defocus range is set, and

the smaller the defocus range is, the higher a degree of focus in the defocusing process, and the larger the defocus range is, the higher a degree of defocus in the defocusing process.

20. The non-transitory computer-readable storage medium of claim **18**, wherein

the smaller the distance between the visual point position of the user and the superimposition location of the content is, the smaller the defocus range set by the circuitry is, and the bigger the distance is, the larger the defocus range set by the circuitry is.

21. The non-transitory computer-readable storage medium of claim **18**, wherein

the smaller the defocus range is, the higher a degree of focus in the defocusing process, and the larger the defocus range is, the higher a degree of defocus in the defocusing process.

* * * * *