US 20220323078A1

(19) United States

(12) Patent Application Publication

(10) Pub. No.: US 2022/0323078 A1

(43) Pub. Date: Oct. 13, 2022

FRIEDMAN et al.

(54) **ROTATIONALLY TORQUABLE ENDOVASCULAR DEVICE WITH VARIABLE FLEXIBILITY TIP**

(71) Applicant: **RAPID MEDICAL LTD.**, Yokneam (IL)

(72) Inventors: **Aharon FRIEDMAN**, Haifa (IL); **Matan GEDULTER**, Givat Ela (IL); **Ronen ECKHOUSE**, Shimshit (IL); **Moshe MILLER**, Jerusalem (IL)

(73) Assignee: **RAPID MEDICAL LTD.**, Yokneam (IL)

(21) Appl. No.: **17/808,913**

(22) Filed: **Jun. 24, 2022**

Related U.S. Application Data

(63) Continuation of application No. 16/668,427, filed on Oct. 30, 2019, now Pat. No. 11,389,172, which is a continuation-in-part of application No. 16/388,056, filed on Apr. 18, 2019, now Pat. No. 11,090,464, which is a continuation-in-part of application No. PCT/IB2017/001663, filed on Sep. 28, 2017.

(60) Provisional application No. 62/401,387, filed on Sep. 29, 2016.

Publication Classification

(51) **Int. Cl.**
A61B 17/12 (2006.01)
A61B 17/00 (2006.01)

(52) **U.S. Cl.**
CPC ***A61B 17/1214*** (2013.01); ***A61B 17/00234*** (2013.01); *A61B 2017/003* (2013.01); *A61B 2017/1205* (2013.01); *A61B 2017/00867* (2013.01)

(57) **ABSTRACT**

Endovascular and intravascular devices and methods of manufacturing endovascular and intravascular devices may be provided. In one implementation, an intravascular device including an elongated sheath and an elongated coil distal to the sheath may be provided. The coil may include a first coil segment formed from a plurality of wires helically-wound at a first coil angle; a second coil segment formed from a first subset of the plurality of wires that is helically-wound at a second coil angle that is different from the first coil angle; and a third coil segment formed from a second subset of the plurality of wires that is helically-wound at a third coil angle that is different from the first and second coil angles. The coil segments may be configured such that flexibility of the coil increases in a longitudinal direction toward the distal end of the coil.

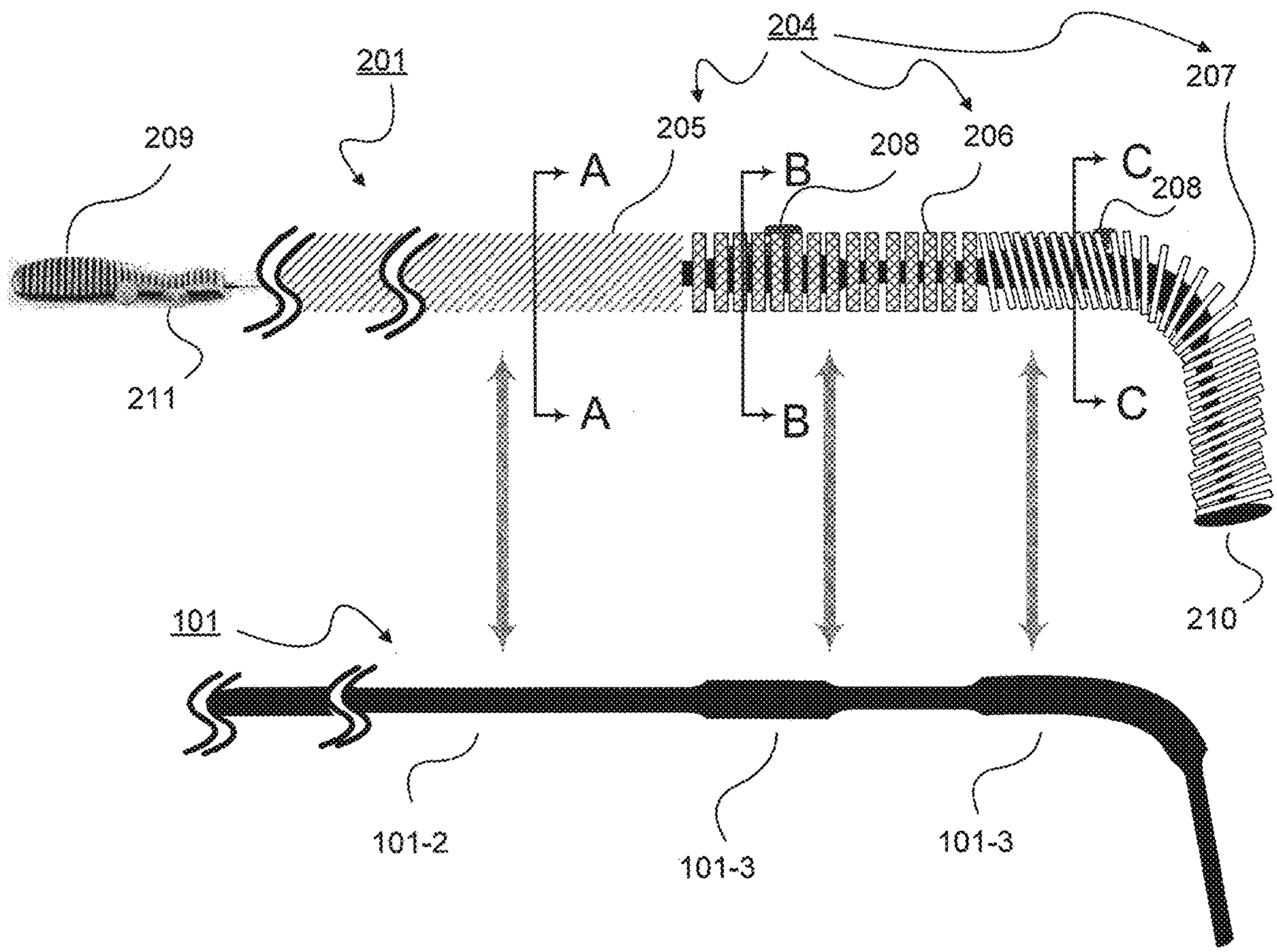

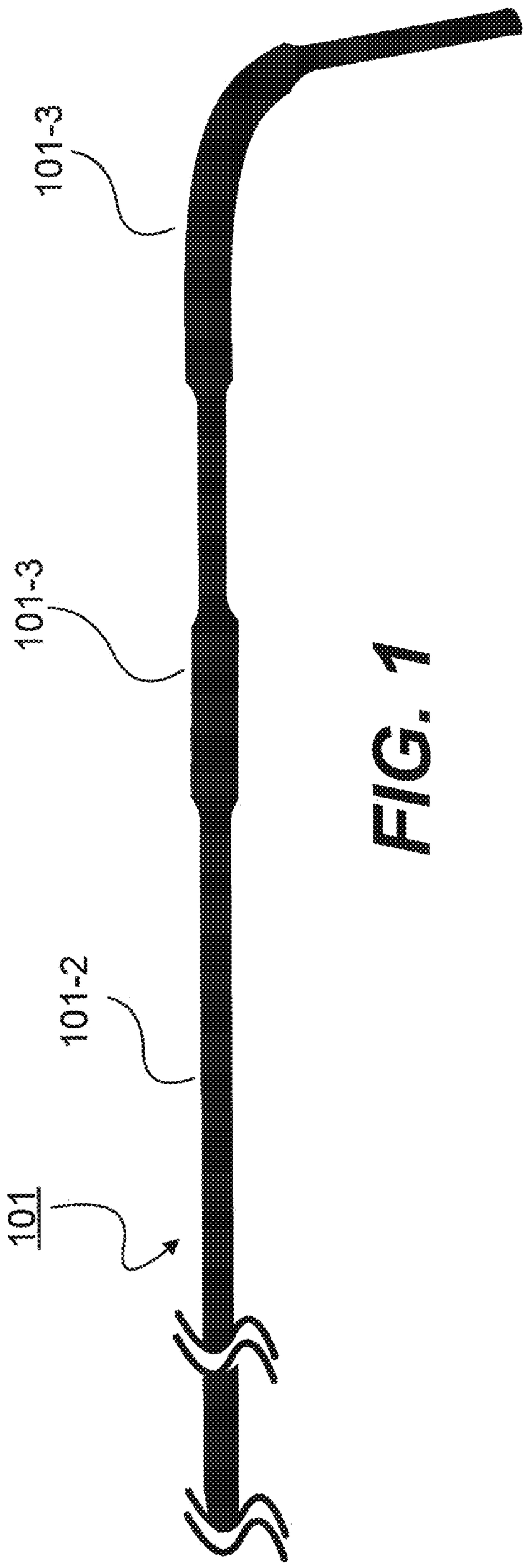

FIG. 1

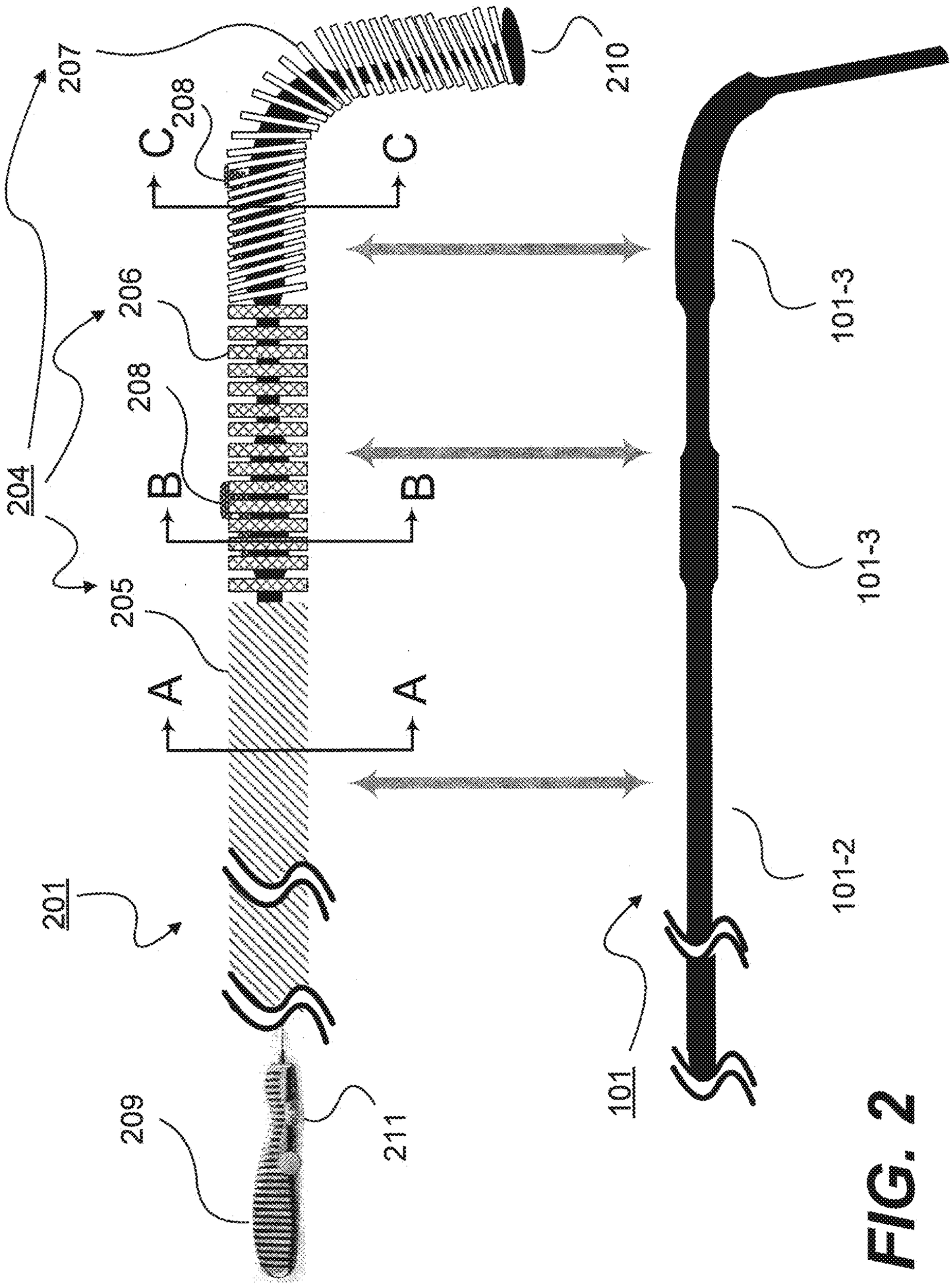
207
210
C
208
C
206
204
208
B
B
205
A
A
201
209
211
101-3
101-3
101-2
101

FIG. 2

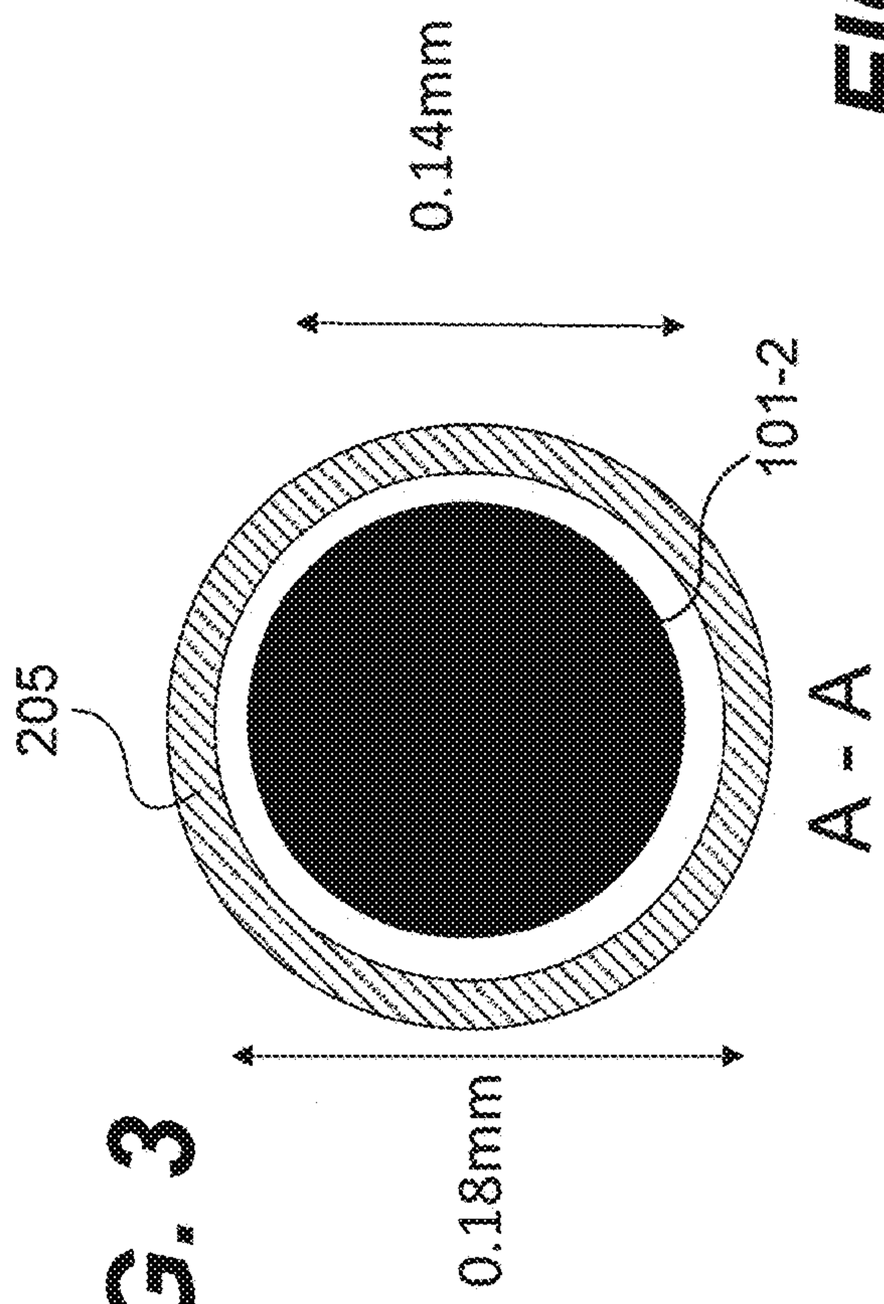

FIG. 3

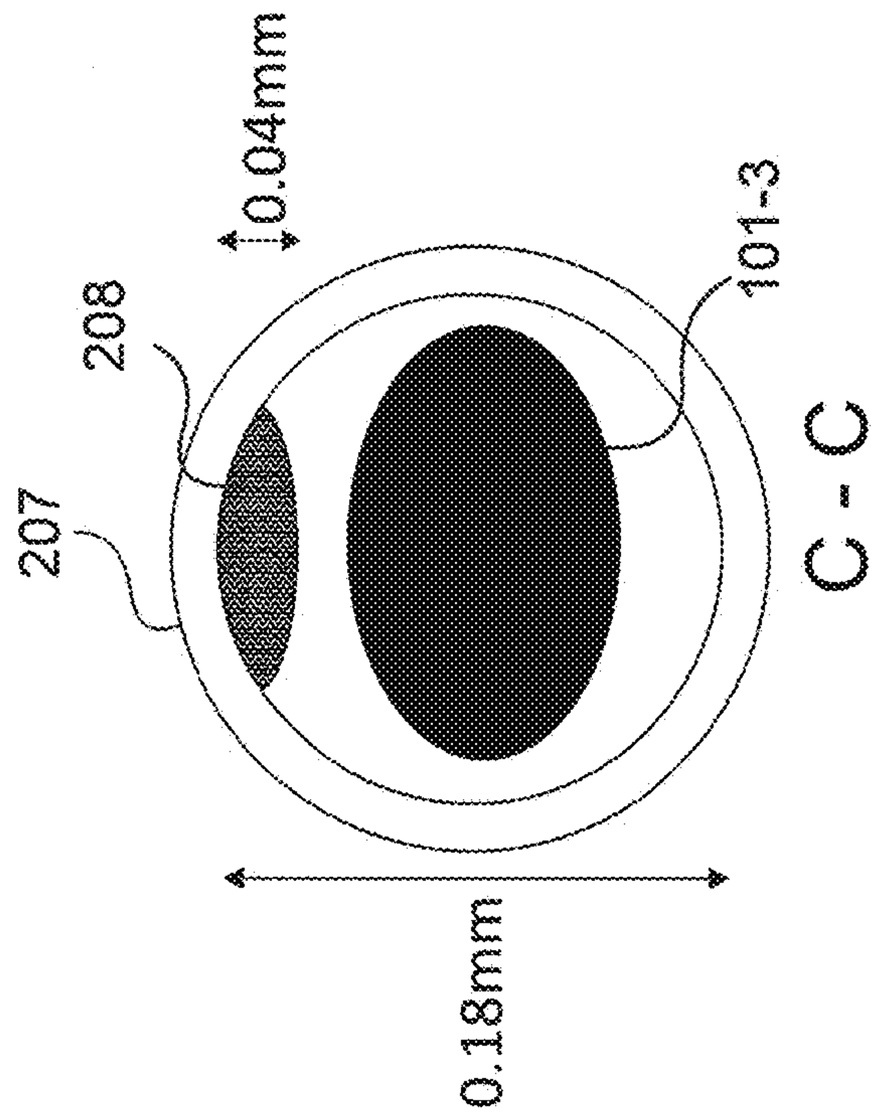

FIG. 5

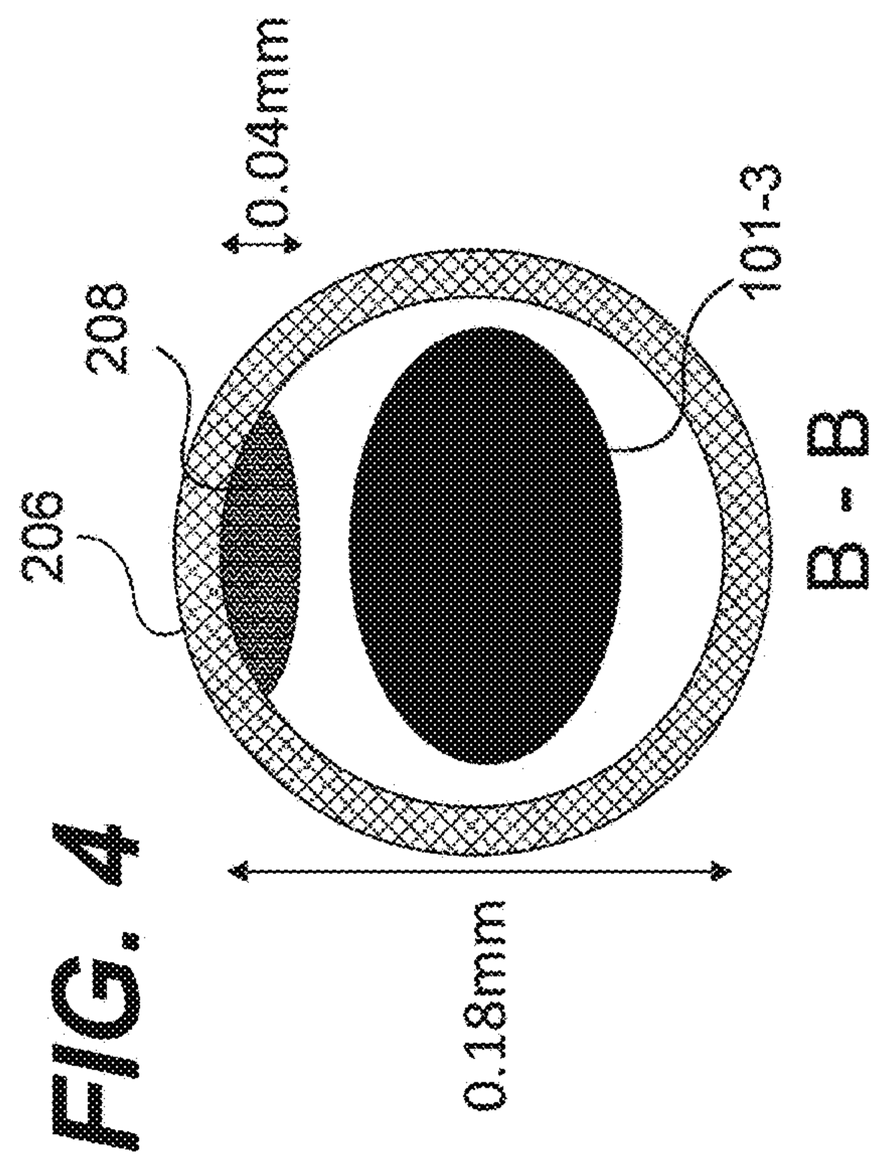

FIG. 4

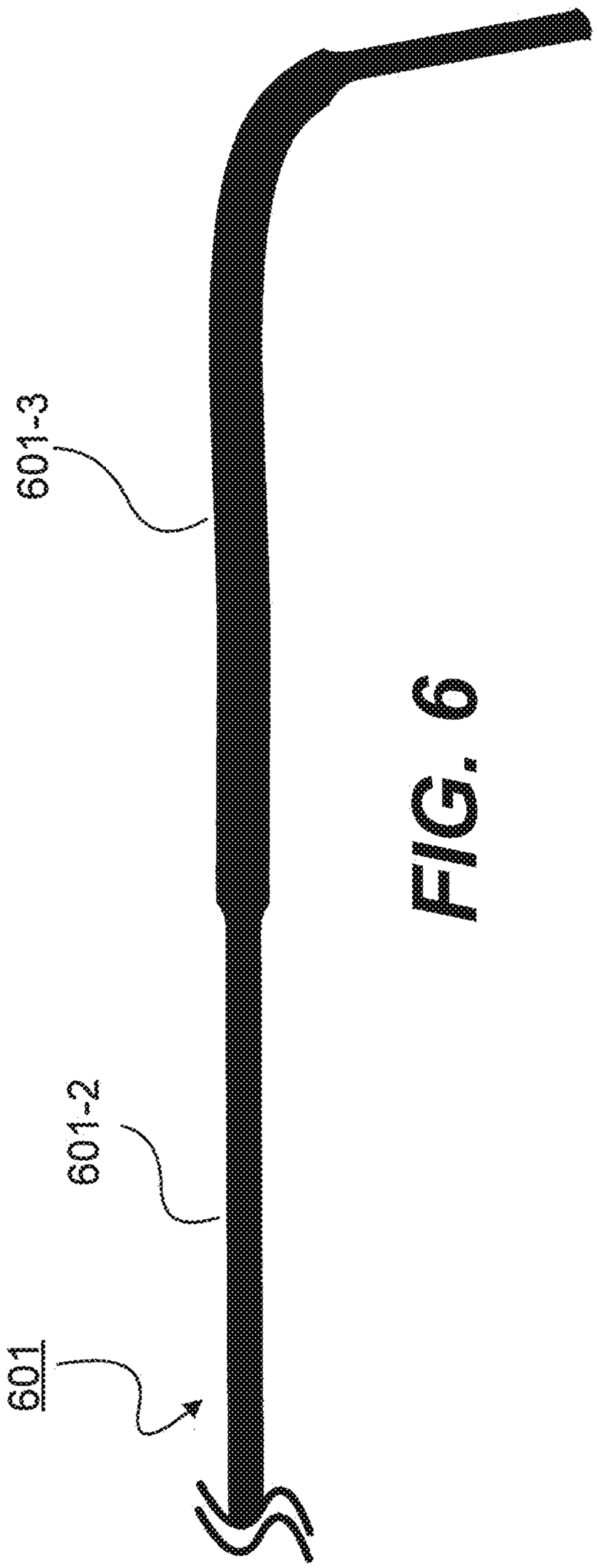

FIG. 6

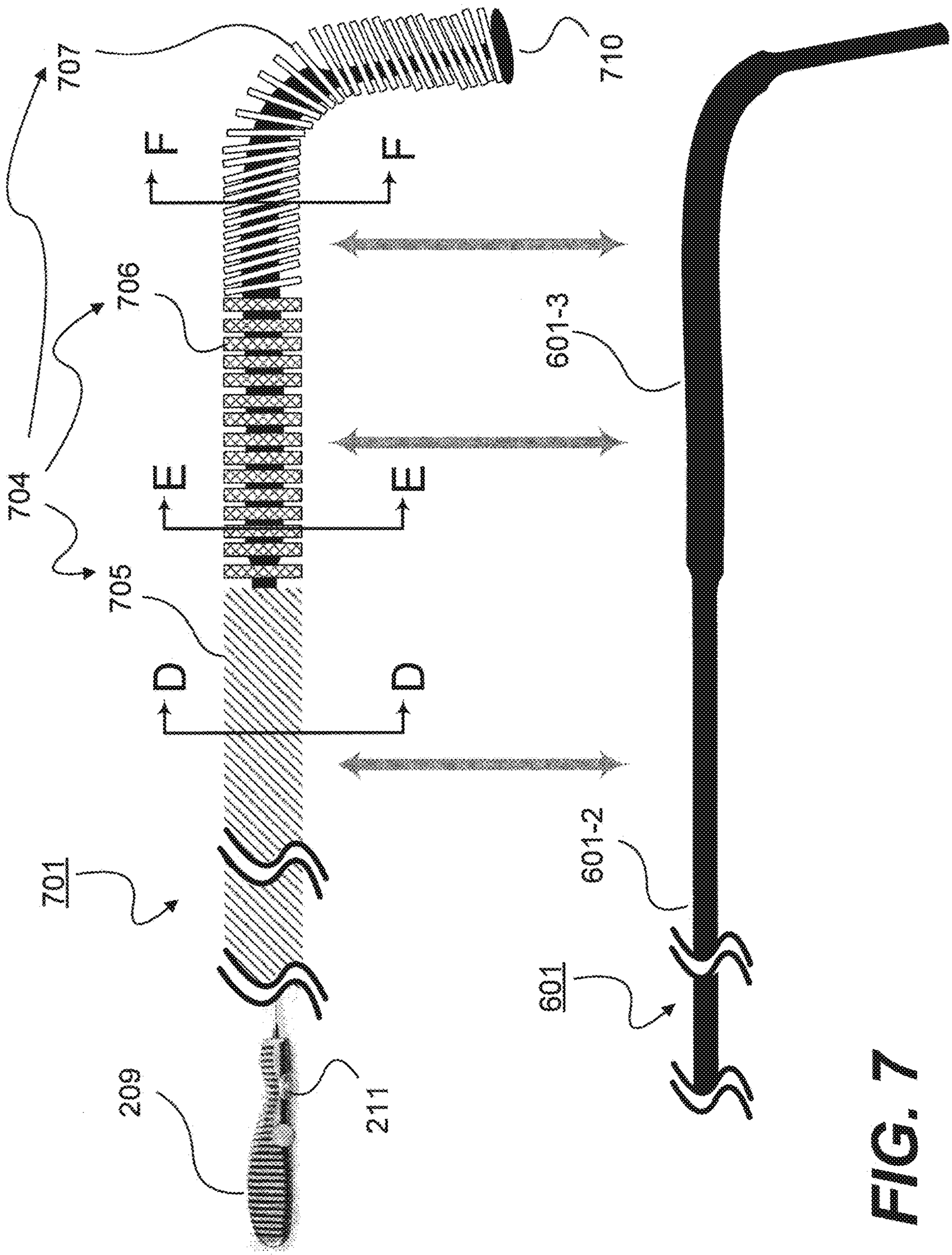

FIG. 7

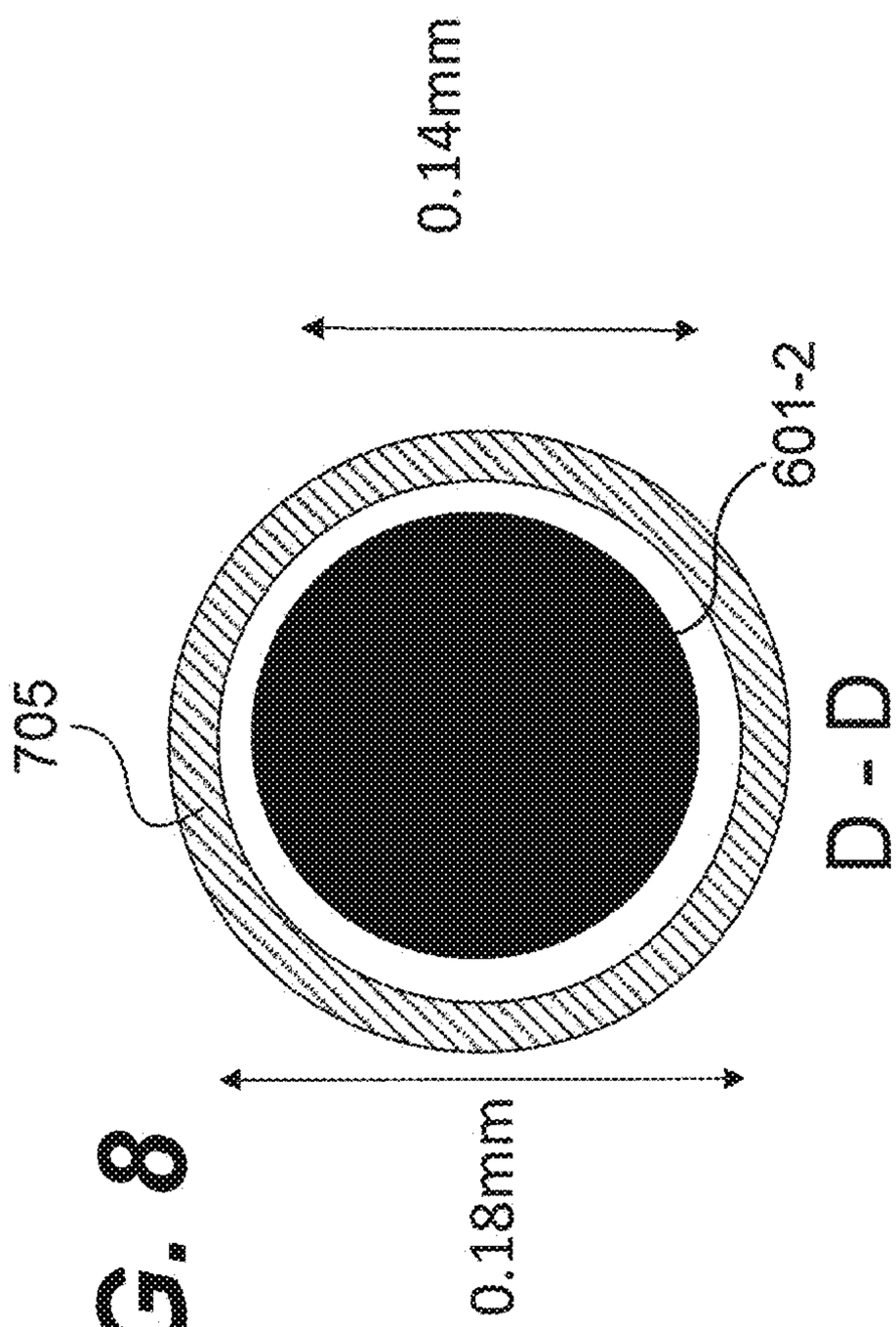

FIG. 8

D - D

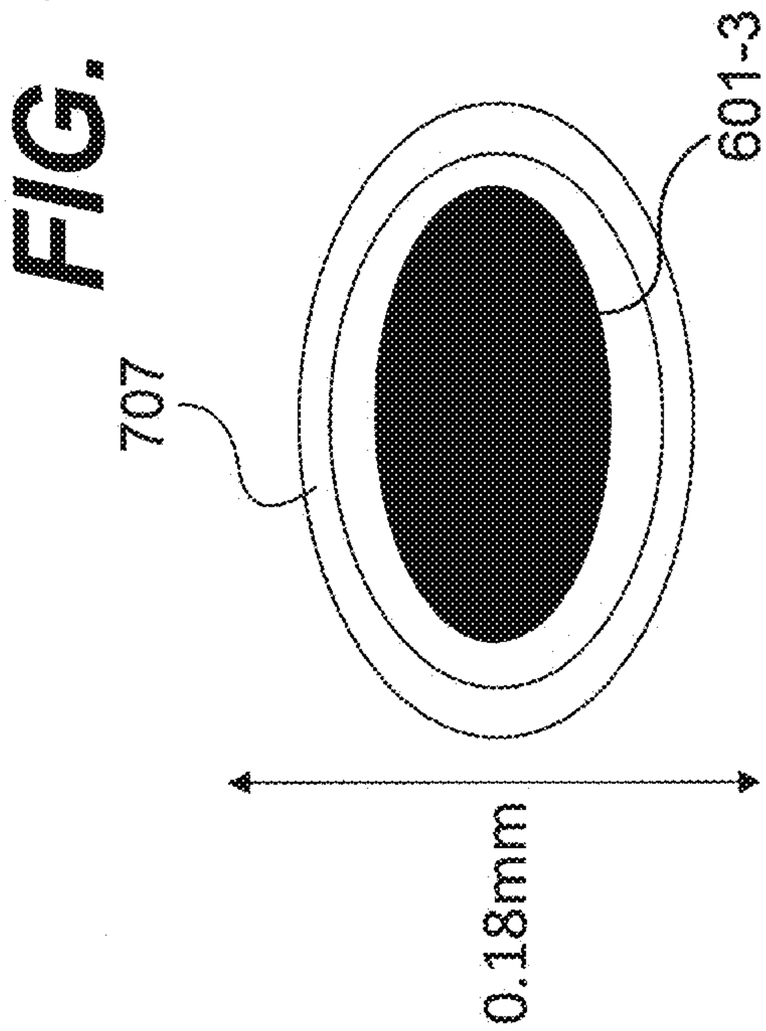

FIG. 10

F - F

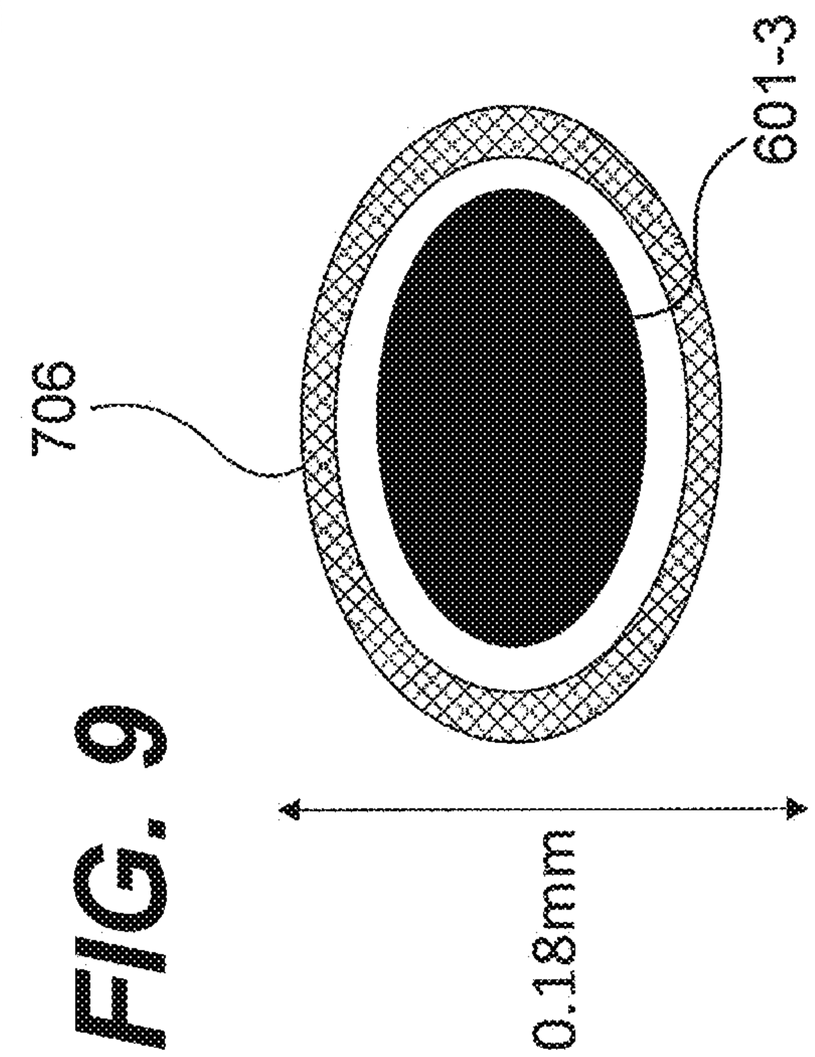

FIG. 9

E - E

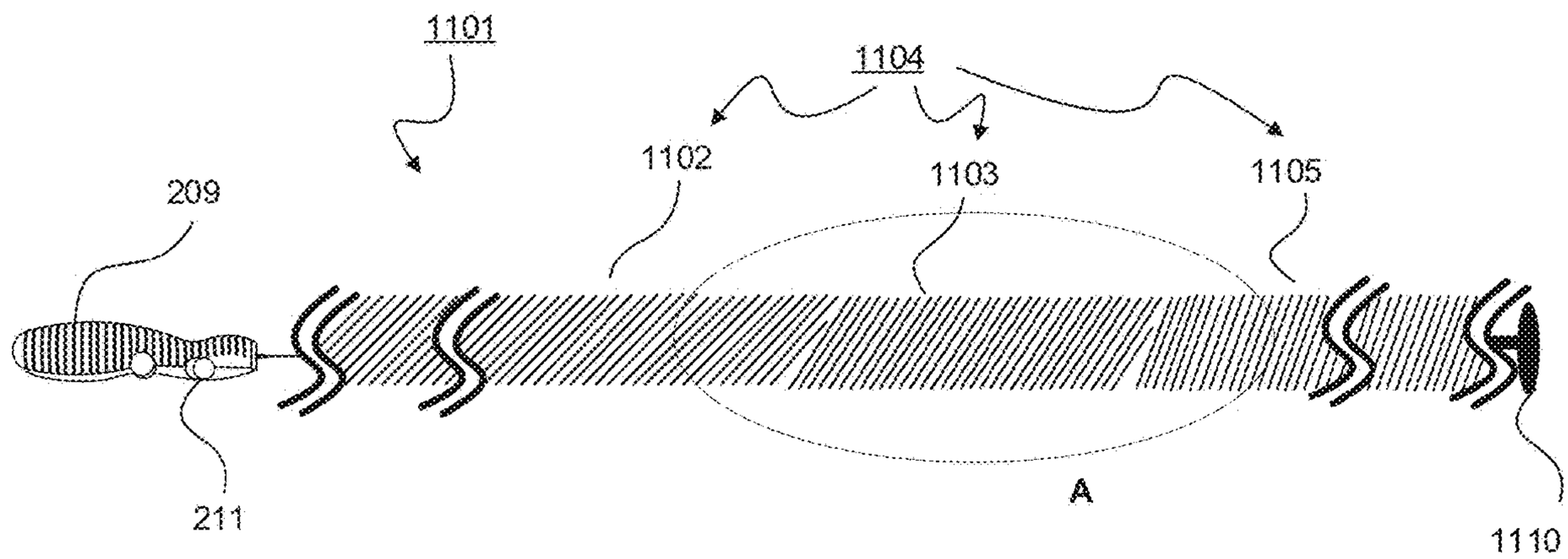

FIG. 11A

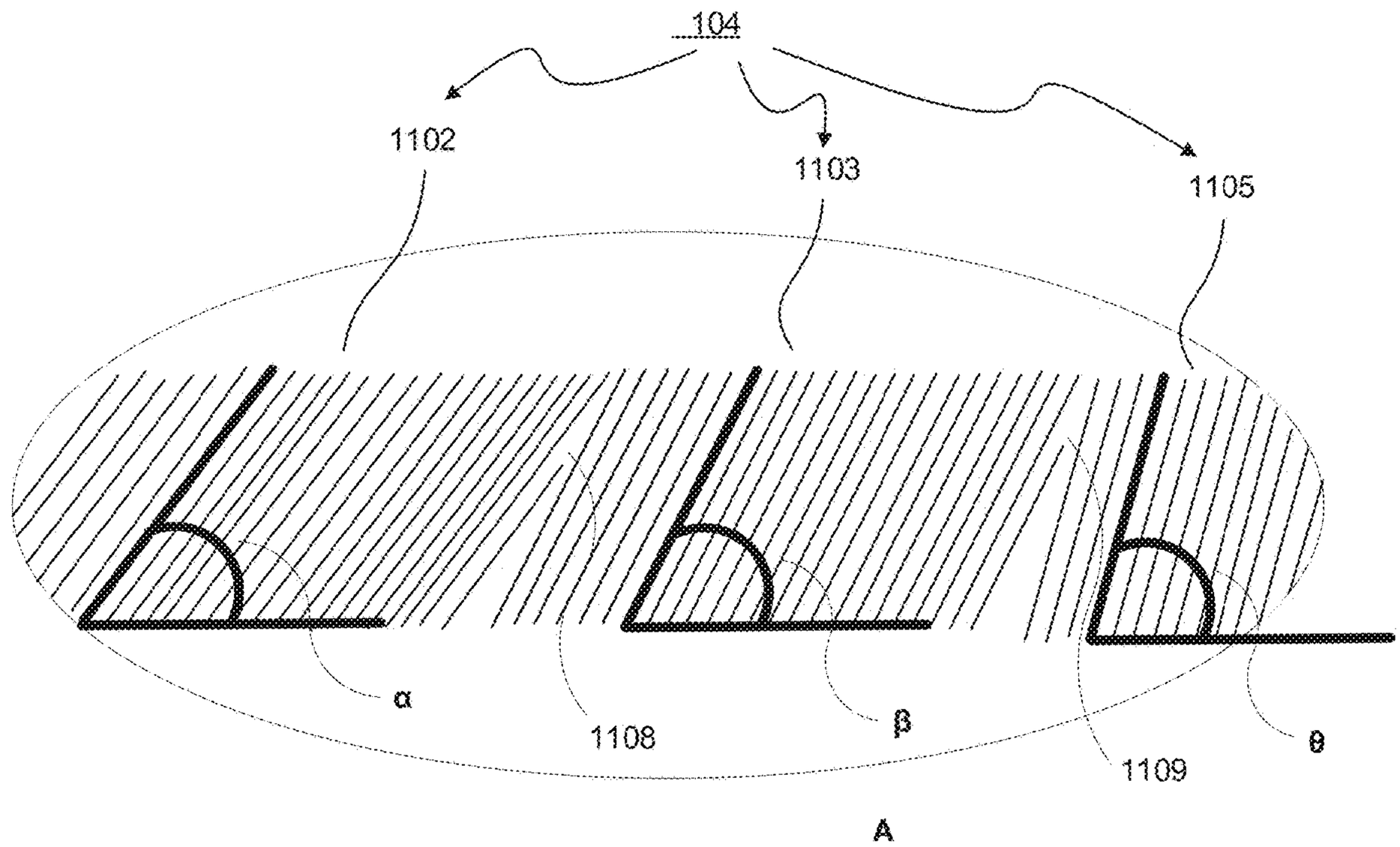

FIG. 11B

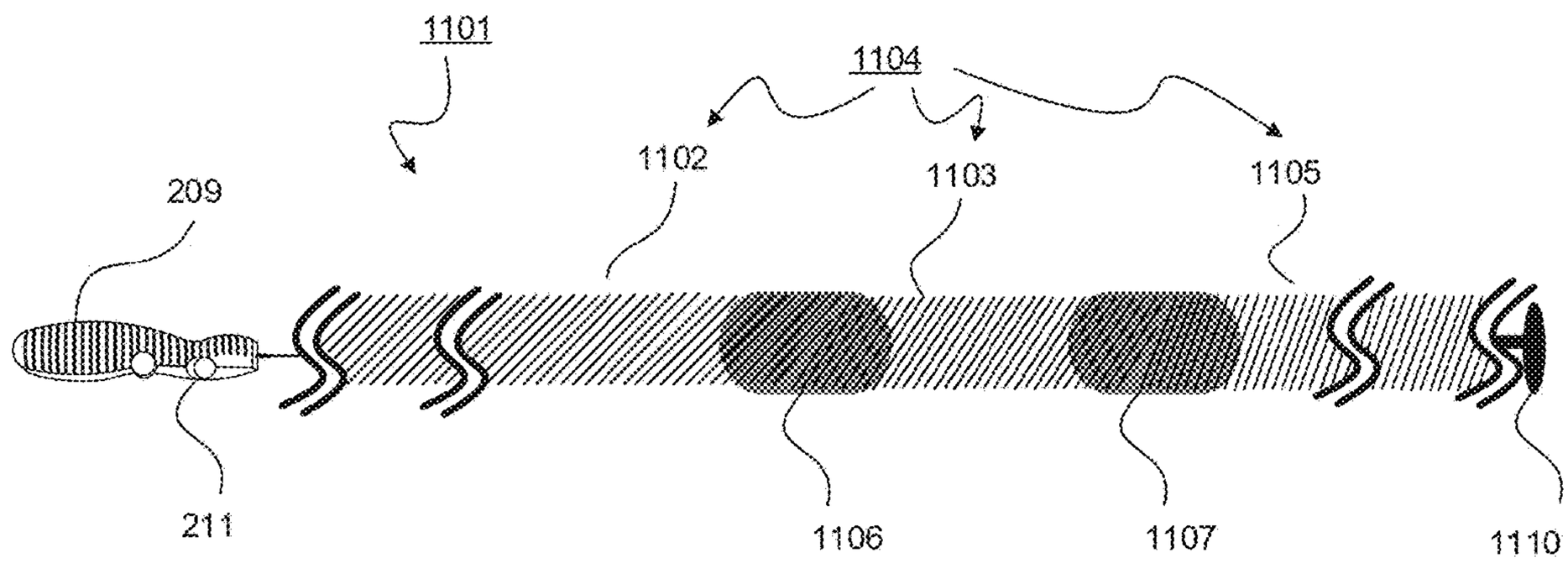

FIG. 11C

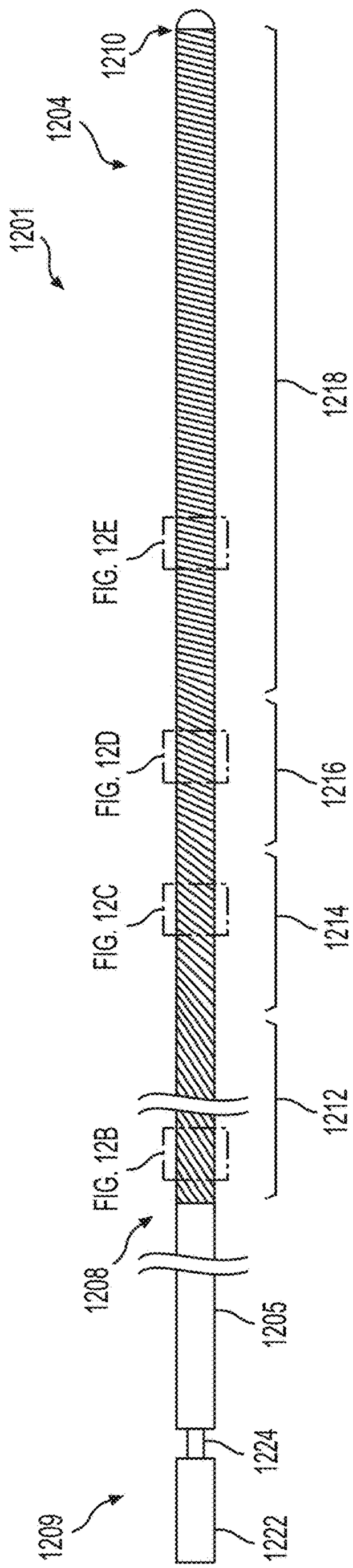

FIG. 12A

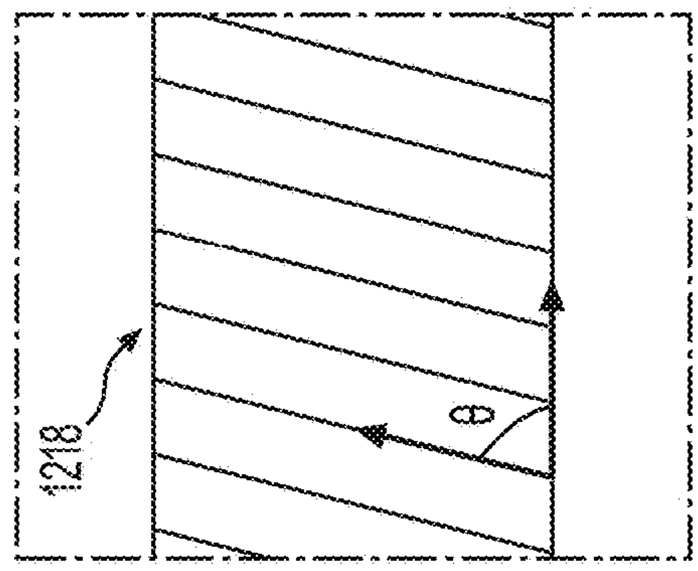

FIG. 12E

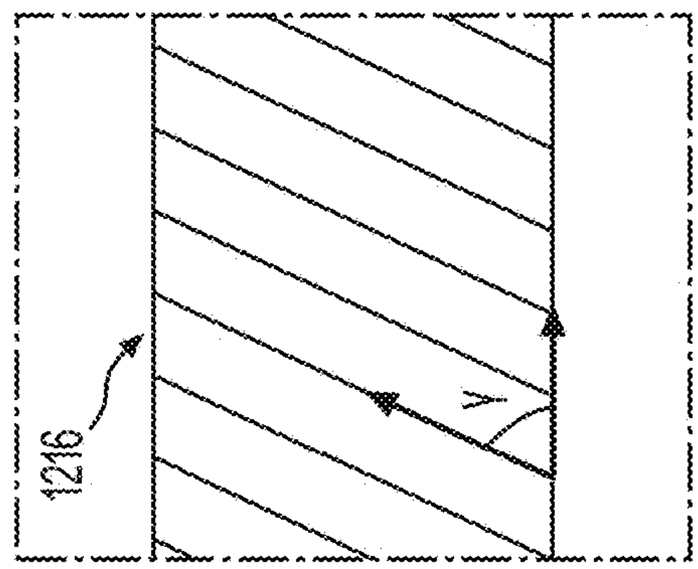

FIG. 12D

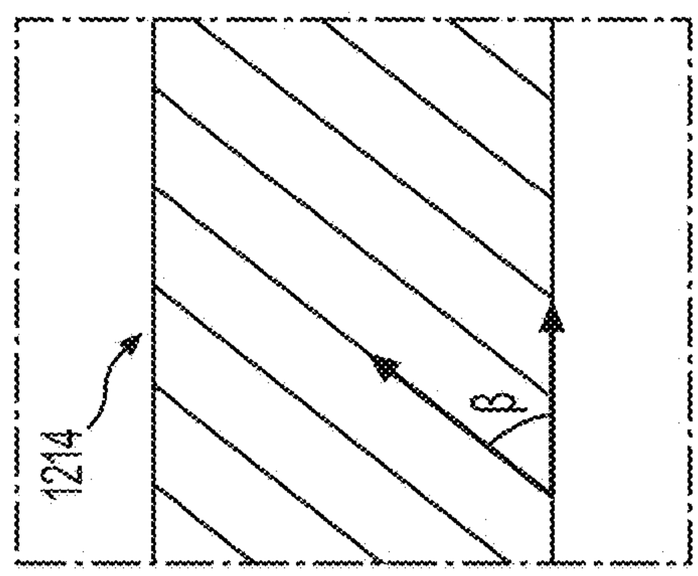

FIG. 12C

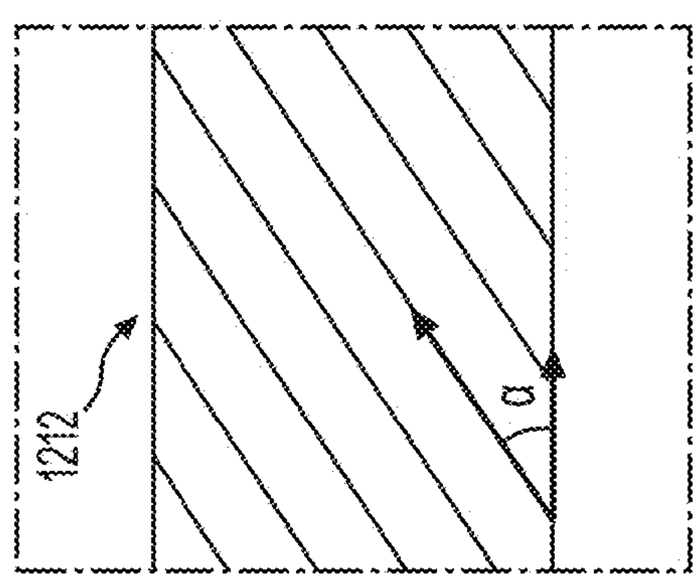

FIG. 12B

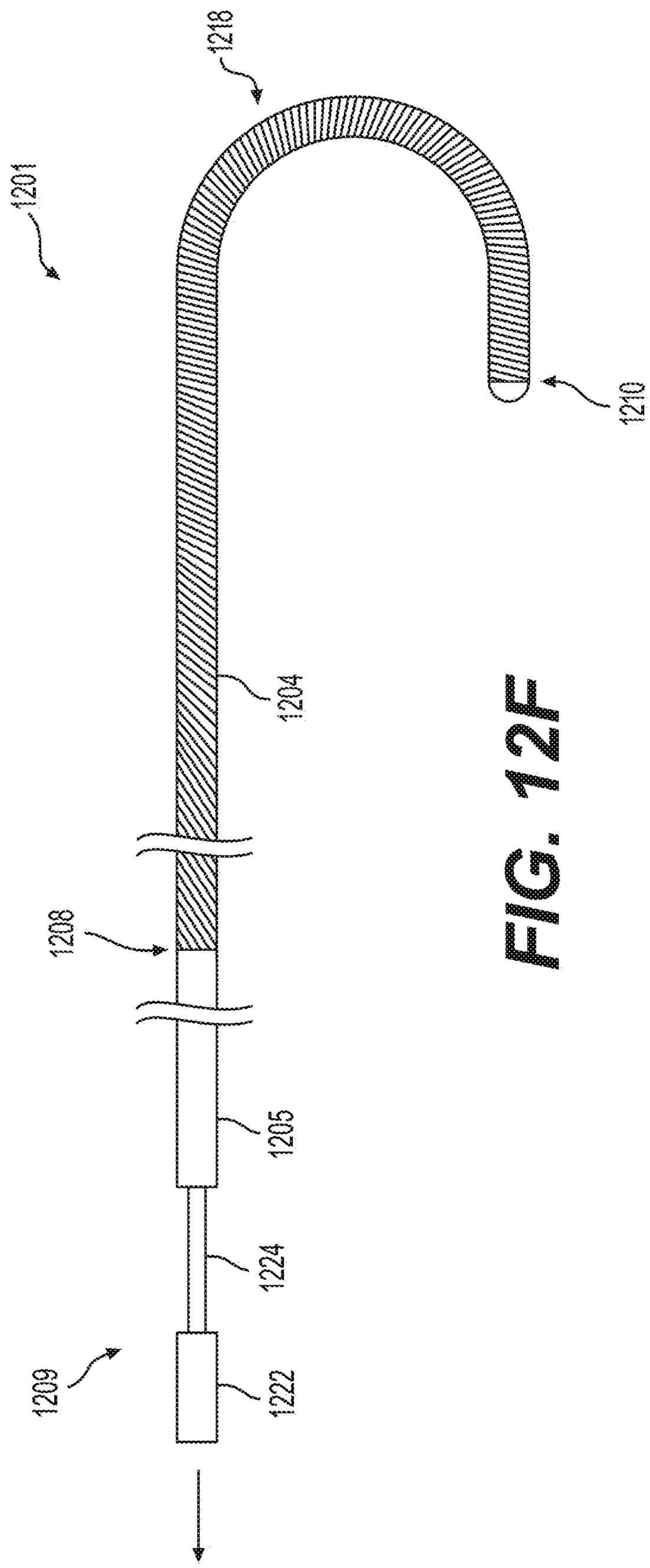

FIG. 12F

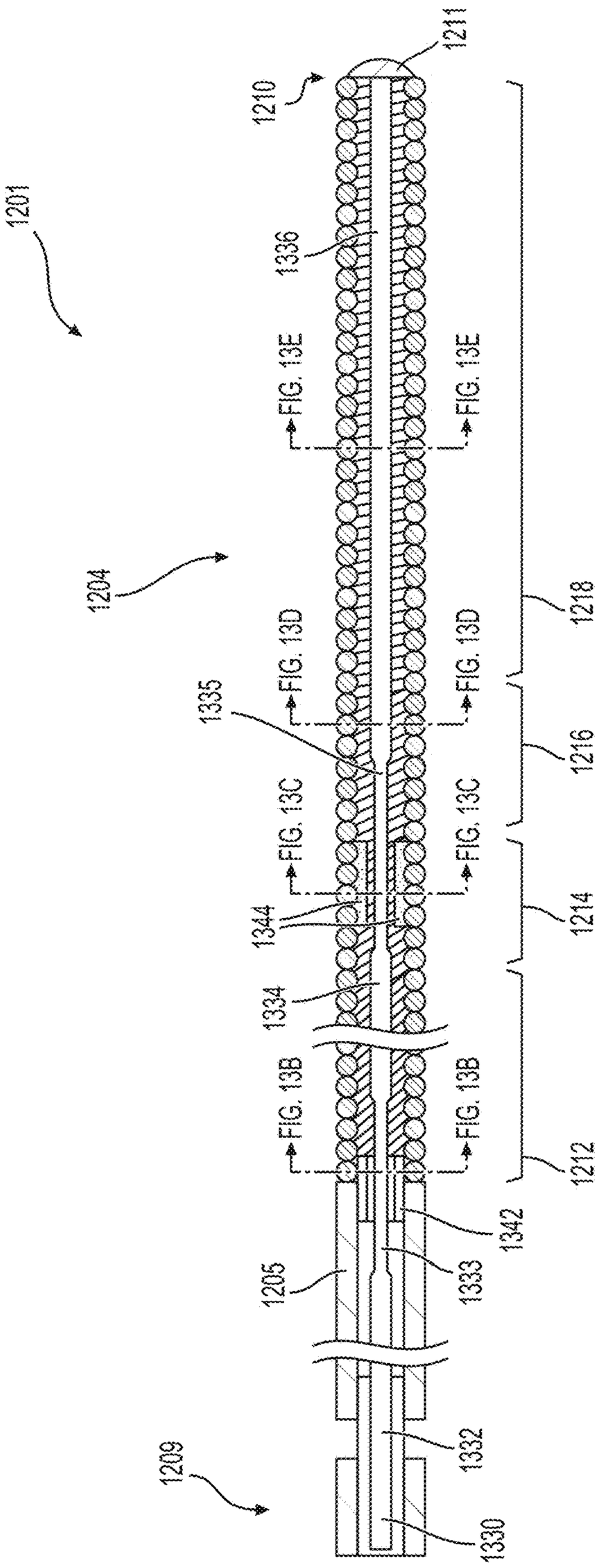
1201
1204
1209
1205
1330
1332
1333
1342
1212
1334
1344
1214
1335
1216
1336
1218
1210
1211
FIG. 13B
FIG. 13C
FIG. 13D
FIG. 13E

FIG. 13A

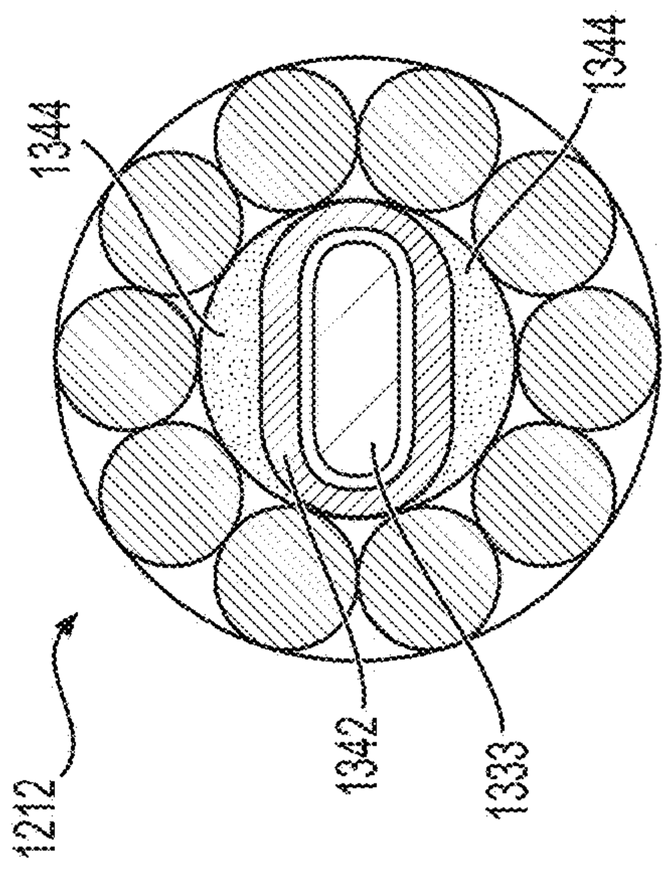

FIG. 13B

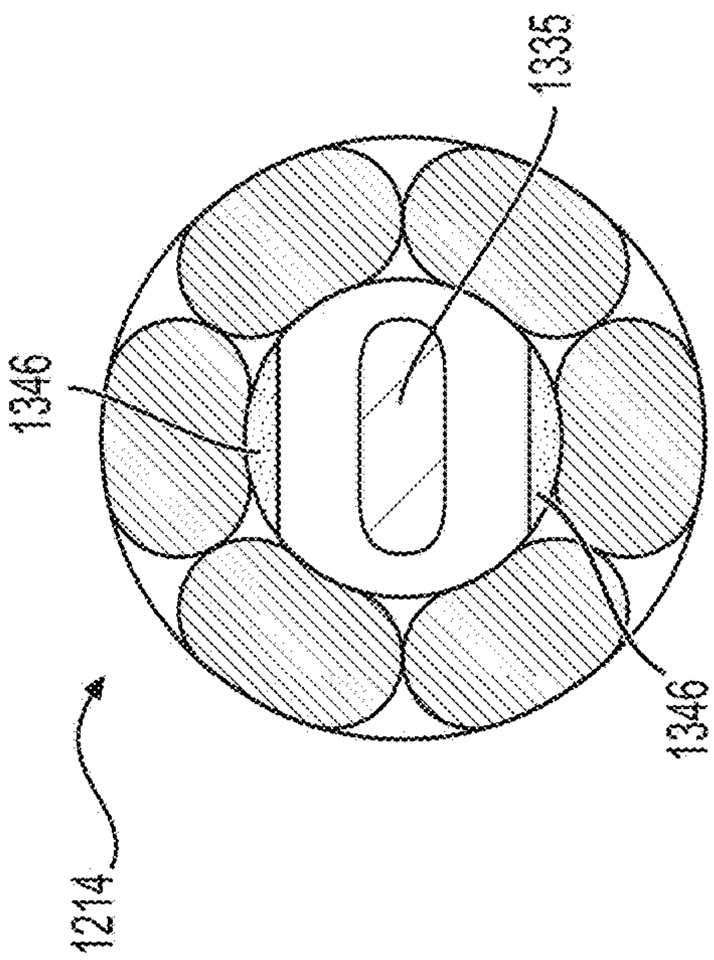

FIG. 13C

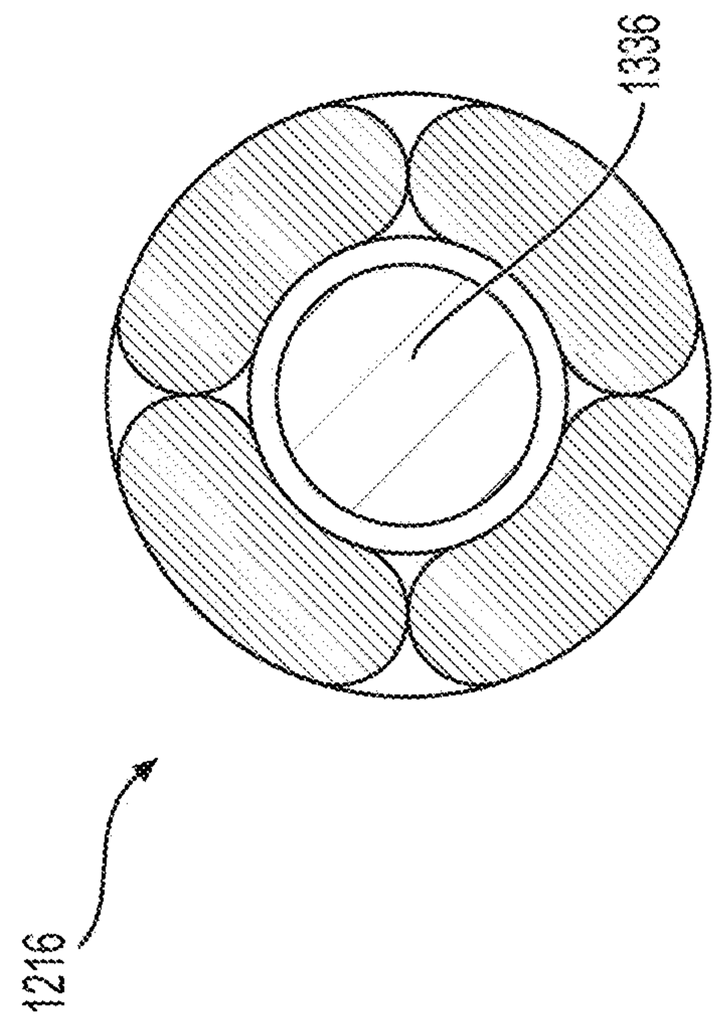

FIG. 13D

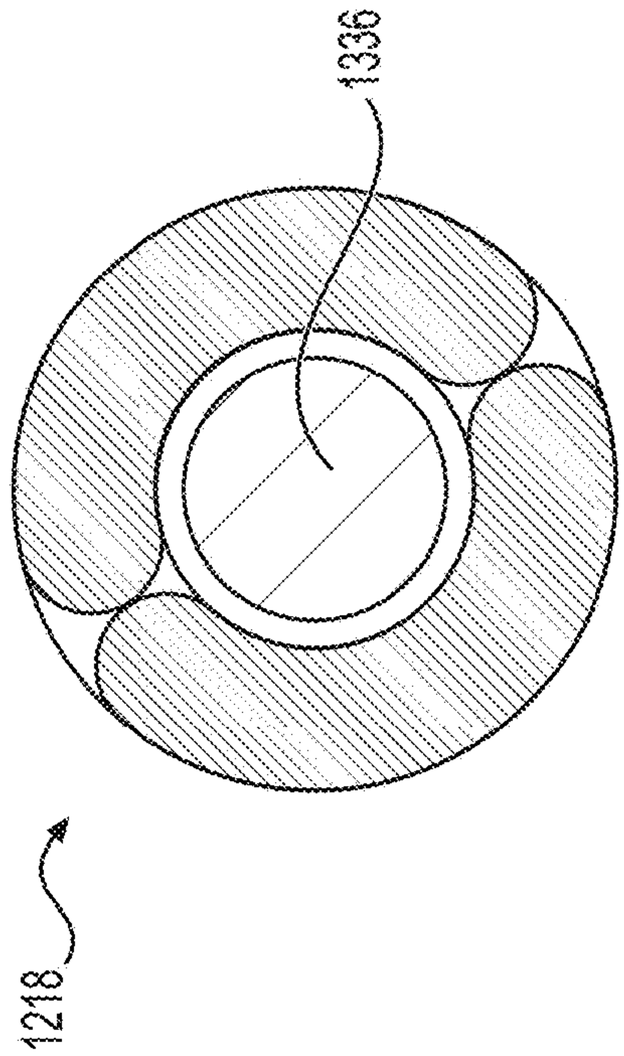

FIG. 13E

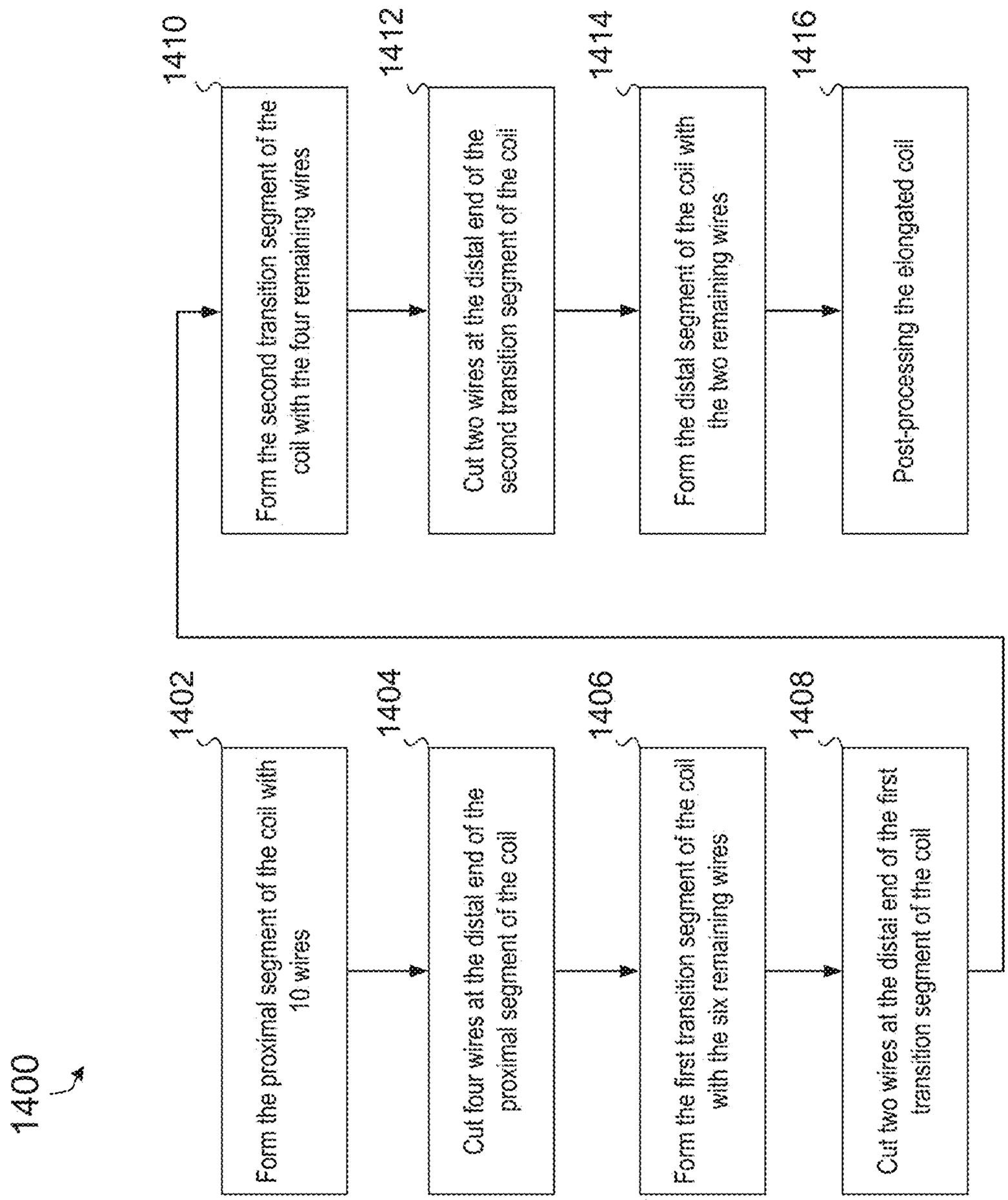
1400
1402
Form the proximal segment of the coil with 10 wires
1404
Cut four wires at the distal end of the proximal segment of the coil
1406
Form the first transition segment of the coil with the six remaining wires
1408
Cut two wires at the distal end of the first transition segment of the coil
1410
Form the second transition segment of the coil with the four remaining wires
1412
Cut two wires at the distal end of the second transition segment of the coil
1414
Form the distal segment of the coil with the two remaining wires
1416
Post-processing the elongated coil

FIG. 14

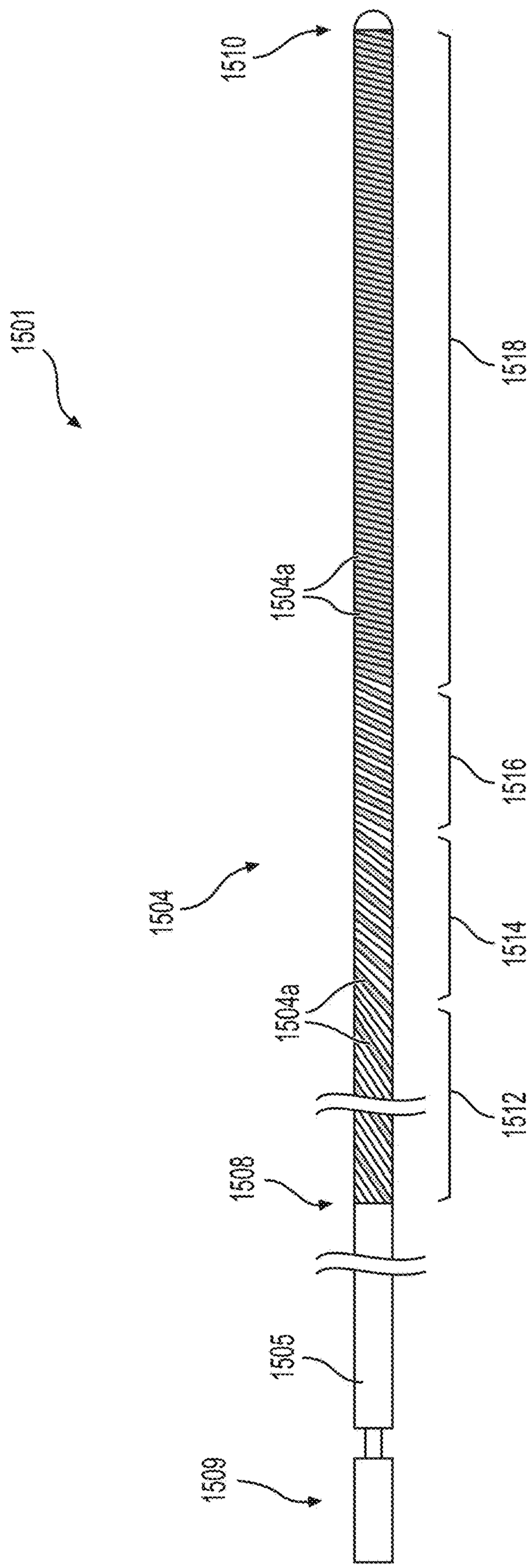
1510
1501
1518
1504a
1516
1504
1514
1504a
1512
1508
1505
1509

FIG. 15

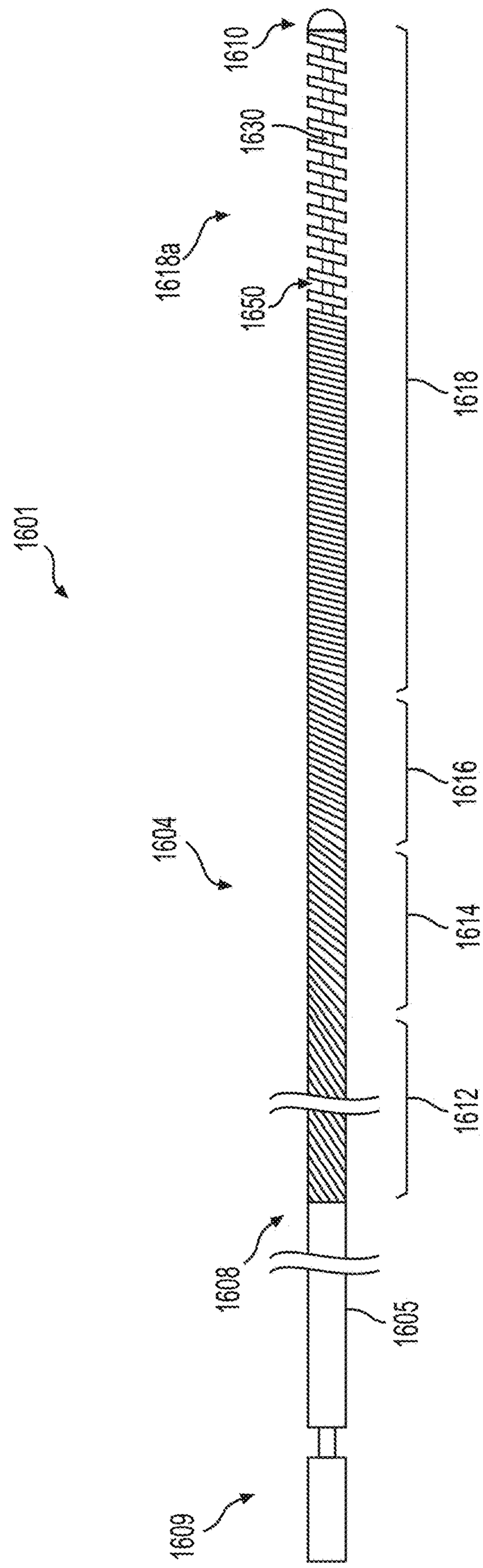
1601
1604
1605
1608
1609
1610
1612
1614
1616
1618
1618a
1630
1650

FIG. 16

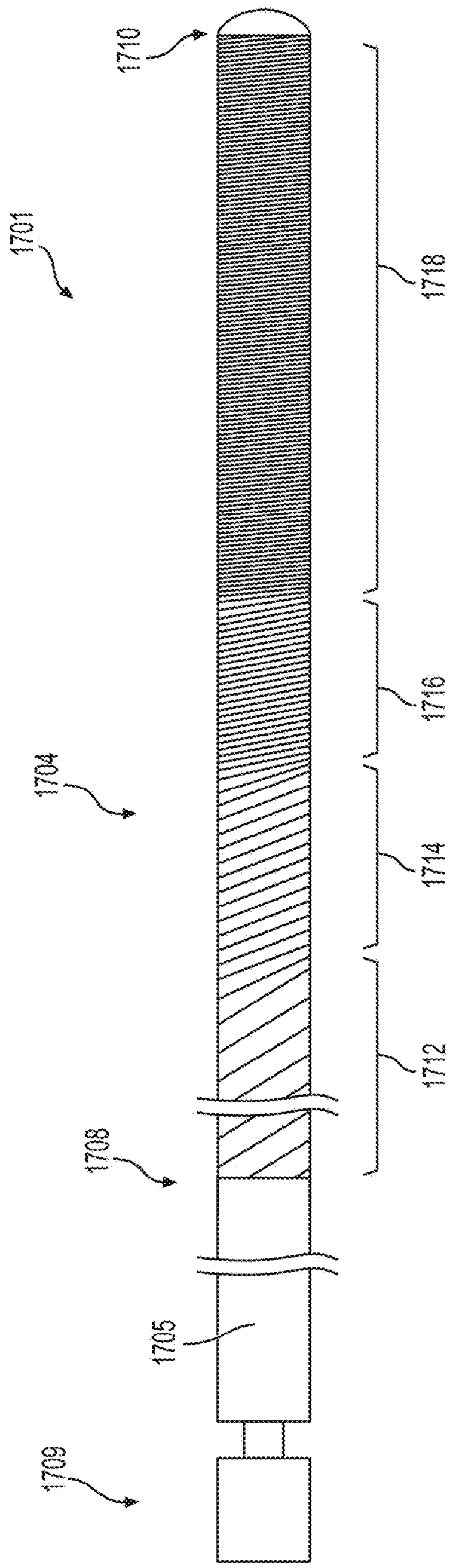

FIG. 17A

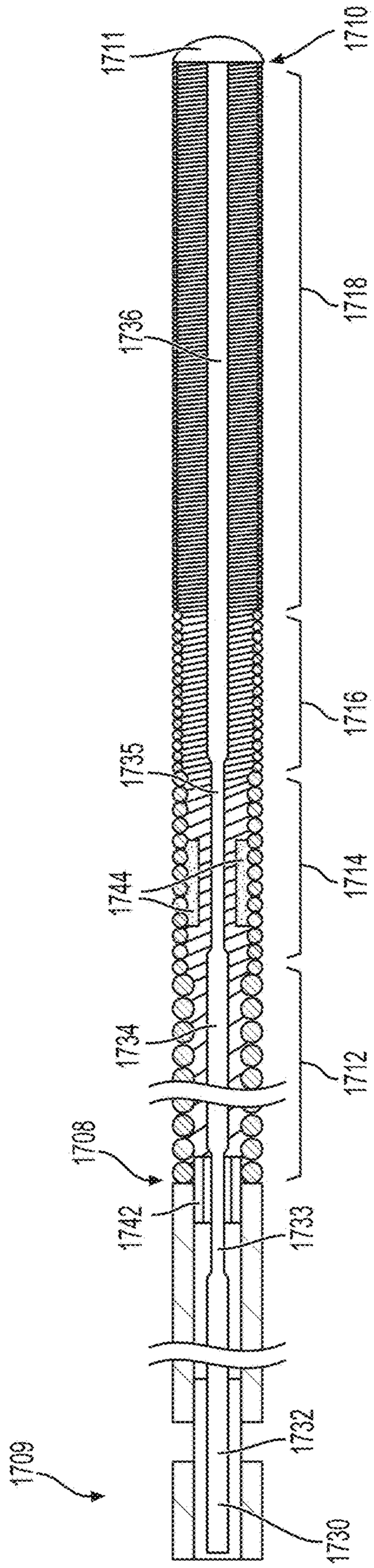

FIG. 17B

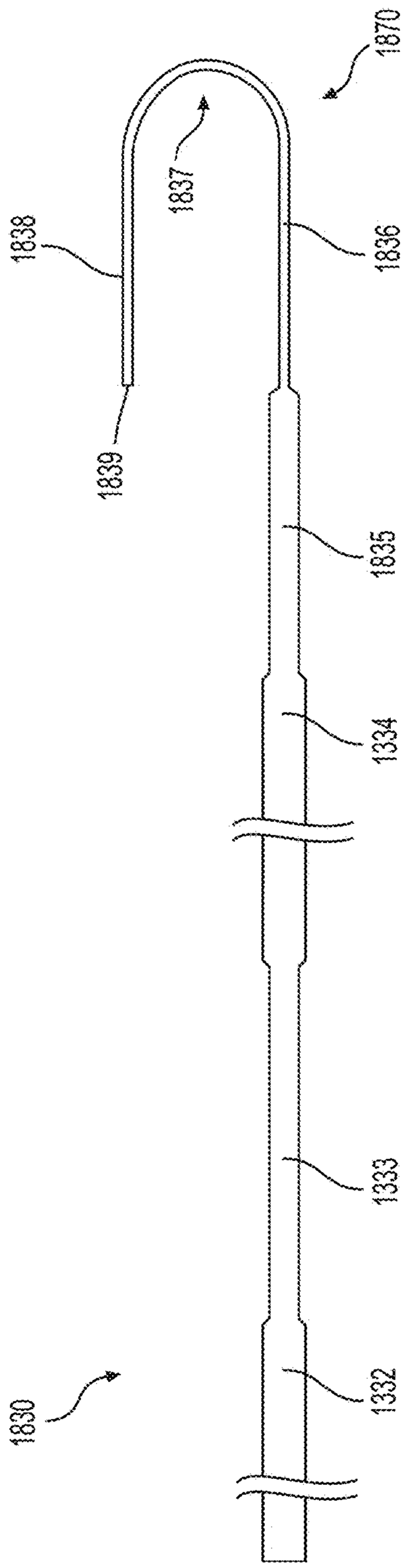

FIG. 18A

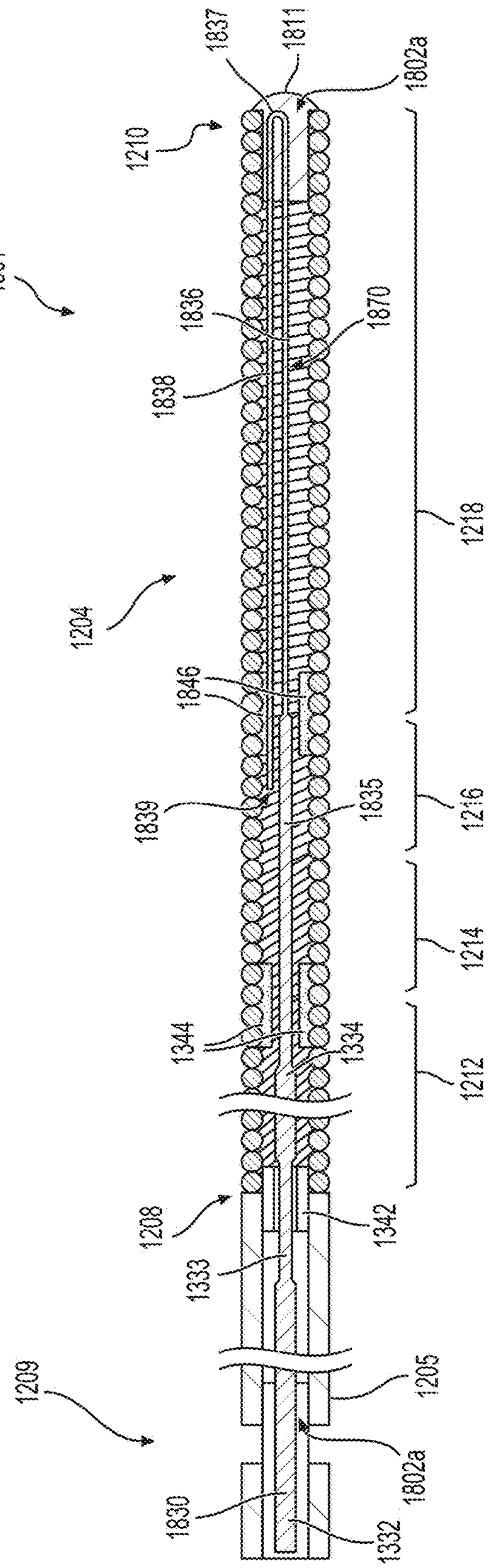

FIG. 18B

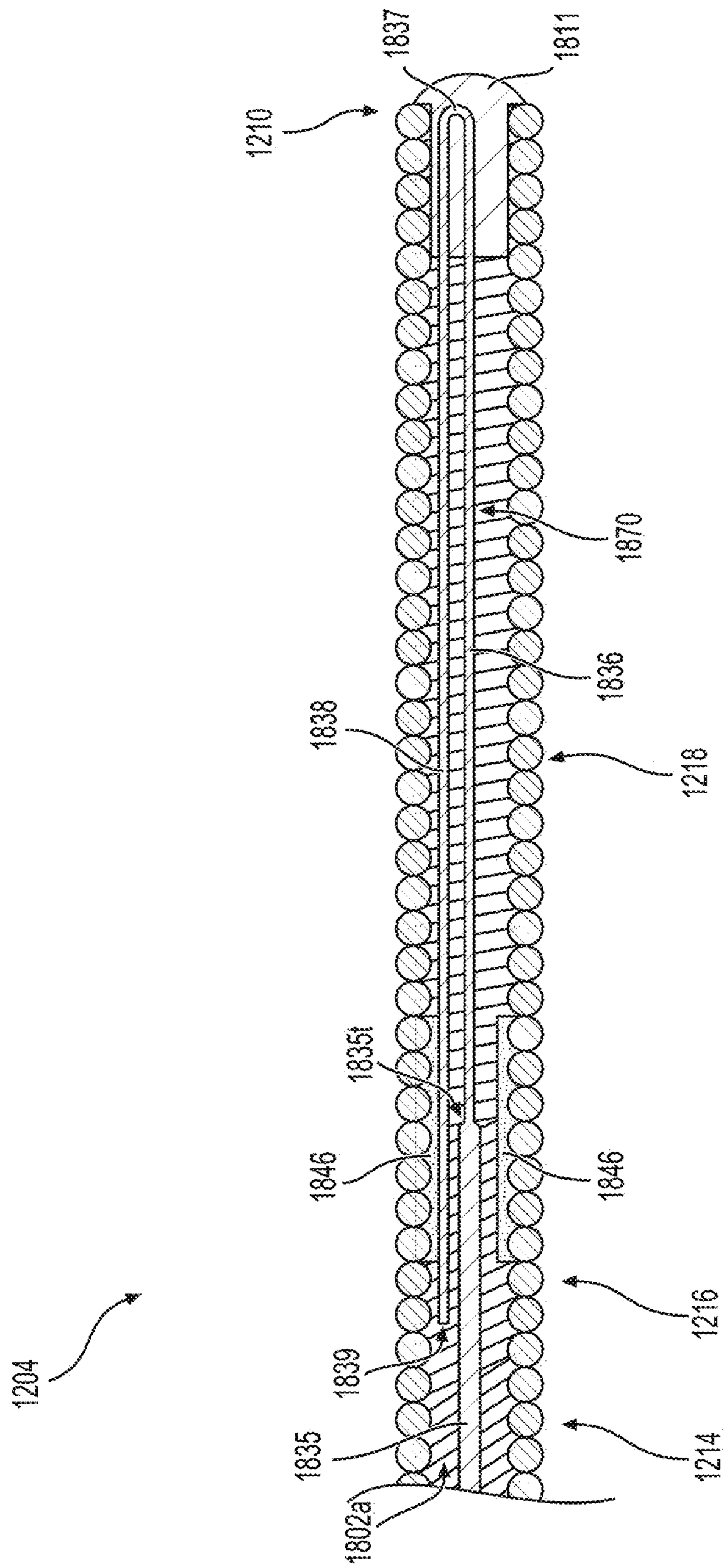
1837
1811
1210
1870
1836
1838
1218
1835t
1846
1846
1216
1204
1839
1835
1214
1802a

FIG. 18C

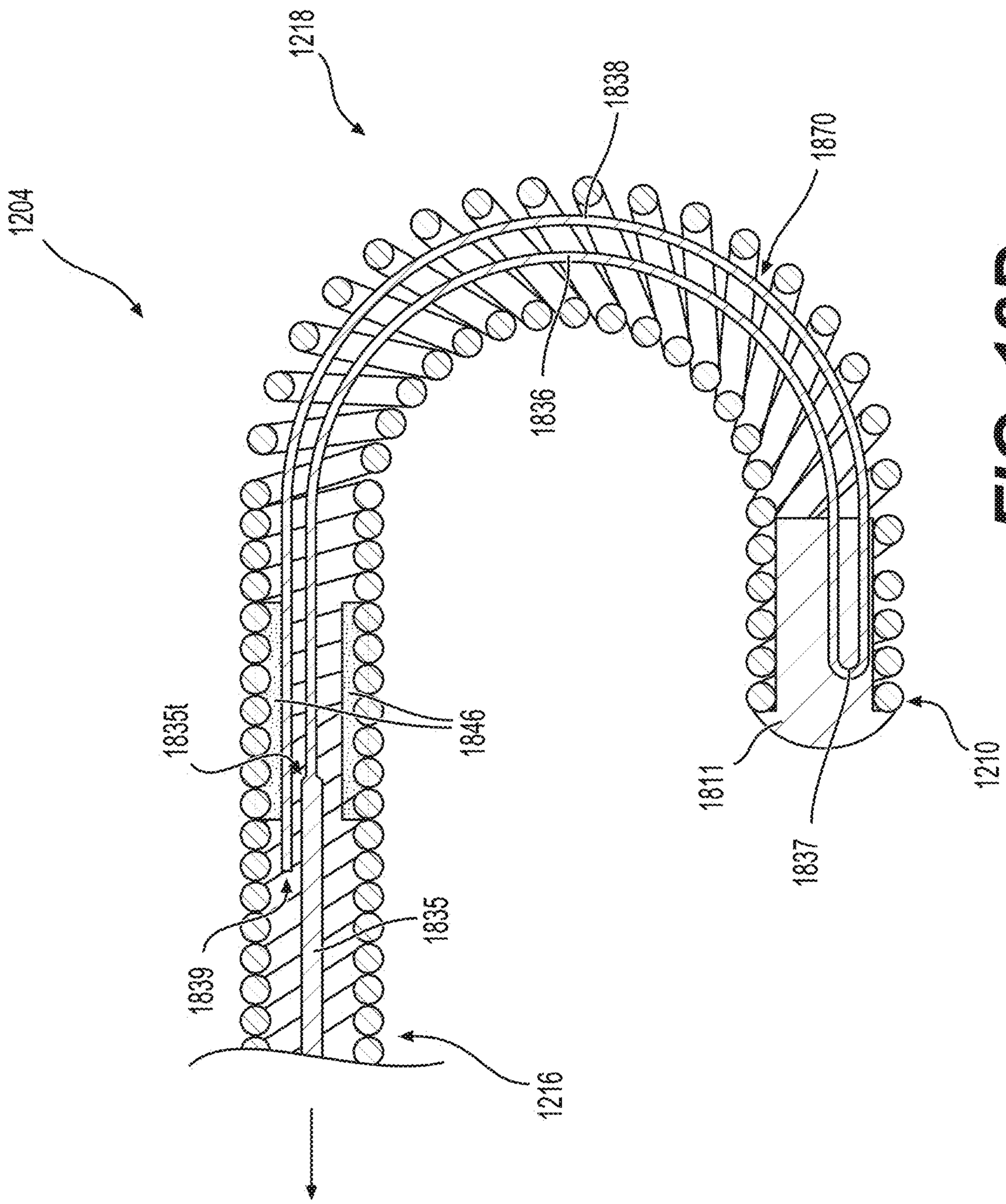
1218
1838
1870
1204
1836
1835t
1846
1811
1210
1837
1835
1839
1216

FIG. 18D

ROTATIONALLY TORQUABLE ENDOVASCULAR DEVICE WITH VARIABLE FLEXIBILITY TIP

CROSS-REFERENCES TO RELATED APPLICATIONS

[0001] This application is a Continuation-In-Part of U.S. application Ser. No. 16/388,056, filed Apr. 18, 2019, which is a Continuation-In-Part of International Application No. PCT/IB2017/001663, filed Sep. 28, 2017, which claims the benefit of priority from U.S. Provisional Application No. 62/401,387 filed Sep. 29, 2016, all of which are herein incorporated by reference in their entireties.

TECHNICAL FIELD

[0002] This disclosure relates generally to endovascular devices. In particular, the disclosure relates generally to an exemplary endovascular device including a coil formed by a plurality of wound wires that is configured such that flexibility of the coil increases in a longitudinal direction toward the distal end of the endovascular device.

SUMMARY

[0003] Embodiments of the present disclosure may include an intravascular device having an elongated sheath. The elongated sheath may include a proximal end and a distal end, the elongated sheath being sized and configured to traverse human vasculature. The intravascular device may also include an elongated coil secured relative to the distal end of the elongated sheath. The elongated coil may extend between a proximal end of the coil and a distal end of the coil to define a longitudinal axis. The elongated coil may include a first coil segment formed from a plurality of wires. The wires of the first coil segment may be helically-wound in the first coil segment at a first coil angle relative to the longitudinal axis. The elongated coil may also include a second coil segment distal to the first coil segment. The second coil segment may be formed from a first subset of the plurality of wires. The first subset of wires may be helically-wound in the second coil segment at a second coil angle that is different from the first coil angle. The elongated coil may also include a third coil segment distal to the second coil segment. The third coil segment may be formed from a second subset of the plurality of wires. The second subset of wires may be helically-wound in the third coil segment at a third coil angle that is different from the first coil angle and the second coil angle. The coil segments of the elongated coil may be configured such that flexibility of the elongated coil increases in a longitudinal direction toward the distal end of the elongated coil.

[0004] The plurality of wires may include between six wires and 16 wires, the first subset of wires may include between three wires and eight wires, and the second subset of wires may include one wire or two wires. The plurality of wires may include ten wires, the first subset of wires may include four wires, and the second subset of wires may include two wires. The second coil angle may be larger than the first coil angle and may be smaller than the third coil angle. The first coil angle may be between 55° and 65°, the second coil angle may be between 65° and 75°, and the third coil angle may be between 75° and 85°. The wires of the second subset of wires may be constructed at least partially of a first material and the remaining wires of the plurality of wires may be constructed of a second material that is different from the first material. Wires extending to the distal end of the elongated coil may be constructed at least partially from the first material. At least one wire of the plurality of wires may include a distal end that is situated proximally from the distal end of the elongated coil.

[0005] The intravascular device may additionally include a fourth coil segment situated between the first coil segment and the second coil segment. The fourth coil segment may be formed from a third subset of the plurality of wires that includes more wires than the first and second subsets of wires. The third subset of wires may be helically-wound in the fourth coil segment at a fourth coil angle that is larger than the first coil angle and smaller than the second coil angle. The third subset of wires may include between four wires and nine wires. The third subset of wires may include six wires. The third coil segment may have a greater axial length than the second coil segment and the fourth coil segment. The fourth coil angle may be between 55° and 65°. Spaces may be formed between windings of the elongated coil in a first region of the elongated coil. The first region of the elongated coil may be situated within the third coil segment and may extend axially to the distal end of the elongated coil. The spaces between the windings may be spaced at a regular interval between windings. A wire gauge of the elongated coil may decrease toward the distal end of the elongated coil. Material composition of the elongated sheath may vary toward the distal end of the elongated sheath. The elongated sheath may be constructed of at least one of a metal, a nickel-titanium alloy, or a synthetic material.

[0006] The intravascular device may additionally include an elongated core wire arranged at least partially within the sheath. The elongated core wire may be configured such that when the core wire is moved axially, the distal end of the elongated coil may bend radially. The core wire may be doubled back in a loop within the elongated coil such that a terminal distal end of the core wire may be spaced from the distal end of the elongated coil. The intravascular device may additionally include a movement restrictor situated at least partially within the elongated coil. The movement restrictor may be configured to limit axial movement of the terminal distal end of the core wire in at least one axial direction relative to the elongated coil and to permit the loop of the core wire to buckle, resulting in a bend in the distal end of the elongated coil, when an axial force is exerted on the core wire. The coil segments of the elongated coil may be configured to have differing flexibilities. The coil segments of the elongated coil may be aligned axially along the elongated coil to form a unified structure of the elongated coil that may have axially variable flexibility.

BRIEF DESCRIPTION OF THE DRAWINGS

[0007] The accompanying drawings, which are incorporated in and constitute a part of this specification, illustrate disclosed embodiments and, together with the description, serve to explain the disclosed embodiments.

[0008] FIG. **1** illustrates a control wire for an exemplary endovascular device, consistent with various embodiments of the present disclosure.

[0009] FIG. **2** illustrates an exemplary endovascular device with the control wire of FIG. **1**, consistent with various embodiments of the present disclosure.

[0010] FIG. **3** illustrates an inner cross-section of a section of the exemplary endovascular device of FIG. **2**, consistent with various embodiments of the present disclosure.

[0011] FIG. **4** illustrates an inner cross-section of a second section of the exemplary endovascular device of FIG. **2**, consistent with various embodiments of the present disclosure.

[0012] FIG. **5** illustrates an inner cross-section of a third section of the exemplary endovascular device of FIG. **2**, consistent with various embodiments of the present disclosure.

[0013] FIG. **6** illustrates a control wire for another exemplary endovascular device, consistent with various embodiments of the present disclosure.

[0014] FIG. **7** illustrates an exemplary endovascular device with the control wire of FIG. **6**, consistent with various embodiments of the present disclosure.

[0015] FIG. **8** illustrates an inner cross-section of a section of the exemplary endovascular device of FIG. **7**, consistent with various embodiments of the present disclosure.

[0016] FIG. **9** illustrates an inner cross-section of a second section of the exemplary endovascular device of FIG. **7**, consistent with various embodiments of the present disclosure.

[0017] FIG. **10** illustrates an inner cross-section of a third section of the exemplary endovascular device of FIG. **7**, consistent with various embodiments of the present disclosure.

[0018] FIG. **11**A illustrates an exemplary endovascular device, consistent with various embodiments of the present disclosure.

[0019] FIG. **11**B illustrates a section of the exemplary endovascular device of FIG. **11**A, consistent with various embodiments of the present disclosure.

[0020] FIG. **11**C illustrates the exemplary endovascular device of FIG. **11**A, consistent with various embodiments of the present disclosure.

[0021] FIG. **12**A illustrates an exemplary endovascular device, consistent with various embodiments of the present disclosure.

[0022] FIGS. **12**B-**12**E illustrate enlarged views of different segments of the exemplary endovascular device of FIG. **12**A, consistent with various embodiments of the present disclosure.

[0023] FIG. **12**F illustrates the exemplary endovascular device of FIG. **12**A in a curved configuration, consistent with various embodiments of the present disclosure.

[0024] FIG. **13**A illustrates an interior view of the exemplary endovascular device of FIG. **12**A, consistent with various embodiments of the present disclosure.

[0025] FIGS. **13**B-**13**E illustrate cross-sectional views of the exemplary endovascular device of FIG. **12**A, consistent with various embodiments of the present disclosure.

[0026] FIG. **14** illustrates an exemplary method of manufacturing an exemplary elongated coil of an endovascular device, consistent with various embodiments of the present disclosure.

[0027] FIG. **15** illustrates an exemplary endovascular device, consistent with various embodiments of the present disclosure.

[0028] FIG. **16** illustrates an exemplary endovascular device, consistent with various embodiments of the present disclosure.

[0029] FIG. **17**A illustrates an exemplary endovascular device, consistent with various embodiments of the present disclosure.

[0030] FIG. **17**B illustrates an interior view of the exemplary endovascular device of FIG. **17**A, consistent with various embodiments of the present disclosure.

[0031] FIG. **18**A illustrates an exemplary core wire of an endovascular device, consistent with various embodiments of the present disclosure.

[0032] FIG. **18**B illustrates an interior view of an endovascular device that includes the core wire of FIG. **18**A, consistent with various embodiments of the present disclosure.

[0033] FIG. **18**C illustrates an enlarged view of a distal portion of the endovascular device of FIG. **18**B in a straightened configuration, consistent with various embodiments of the present disclosure.

[0034] FIG. **18**D illustrates the endovascular device distal portion of FIG. **18**C in a curved configuration, consistent with various embodiments of the present disclosure.

[0035] Annotations appearing in the figures are exemplary only, and are not restrictive of the invention as claimed.

DETAILED DESCRIPTION OF EMBODIMENTS

[0036] Exemplary embodiments are described with reference to the accompanying drawings. In the figures, which are not necessarily drawn to scale, the left-most digit(s) of a reference number identifies the figure in which the reference number first appears. Wherever convenient, the same reference numbers are used throughout the drawings to refer to the same or like parts. While examples and features of disclosed principles are described herein, modifications, adaptations, and other implementations are possible without departing from the spirit and scope of the disclosed embodiments. Also, the words "comprising," "having," "containing," and "including," and other similar forms are intended to be equivalent in meaning and be open ended in that an item or items following any one of these words is not meant to be an exhaustive listing of such item or items, or meant to be limited to only the listed item or items. It should also be noted that as used herein and in the appended claims, the singular forms "a," "an," and "the" include plural references unless the context clearly dictates otherwise.

[0037] FIG. **1** illustrates a control wire **101** of an exemplary endovascular device in accordance with the disclosure, which may be deformed or flattened in two zones **101-3**, and may be round in other areas along its axis **101-2**. FIG. **2** illustrates an exemplary endovascular device **201** using control wire **101** in accordance with the disclosure. (Solely to illustrate the position of zones **101-2** and **101-3** in endovascular device **201**, with the understanding that control wire **101** is part of endovascular device **201**, FIG. **2** also separately depicts control wire **101** of FIG. **1**, with zones **101-3** and **101-2** generally aligned to endovascular device **201**.) As shown in FIG. **2**, endovascular device **201** may include an elongated shaft **204** which may include a tube **205**, a cable of wires **206**, and a single wire coil **207**. A distal tip **210** of the elongated shaft **204** may be attached to control wire **101**, for example. At a proximal end of the elongated shaft **204**, the control wire **101** may be connected to a slider **211** of a handle **209**, with the elongated shaft **204** connected to the handle **209** to facilitate the relative movement. (In FIG. **2**, handle **209** is not depicted to the same scale as that of elongated shaft **204**.) In accordance with at least some

embodiments, two polymers **208** may be inserted between the elongated shaft **204** and the control wire **101** to prevent the radial movement between the control wire **101** and the elongated shaft **204**.

[0038] Consistent with the embodiment shown in FIGS. **9** and **10**, in at least some embodiments of an exemplary endovascular device of the disclosure, the cable of wires **206** and the single wire coil **207** of the elongated shaft **204** may be elliptical. This elliptical shape resists relative rotation of the elongated shaft **204** and the control wire **101**, enabling torqueing of the device. Alternatively, other non-symmetrical shapes (e.g., cross-sections) may be employed, consistent with the present disclosure to resist rotation and to permit torqueing.

[0039] At least some embodiments of an exemplary endovascular device of the disclosure may encompass a fixture enabling transmission of a radial force of the elongated shaft **204** to the control wire **101** with 1:1 ratio. This may be achieved, for example, by preventing axial rotation between the control wire **101** and the elongated shaft **204** without preventing the axial movement between the control wire **101** and the elongated shaft **204**. And such axial rotation prevention (without axial movement prevention) may be achieved, for example, by deforming at least a portion of the control wire **101** and making at least a portion of the inner cross-section of the round elongated shaft **204** non-round respectively. For example, there may be an overlap between the two rectangular (or flattened) portions **101-3** even during axial movement of the control wire **101** compared to the elongated shaft **204**.

[0040] A control wire **101** with at least some flat or rectangular section or sections may be achieved by, for example, selectively pressing the control wire **101**, by adhesion of additional materials to form a non-round shape, or by other means.

[0041] Achieving a non-round inner cross-section may be achieved, for example, by attaching rectangular shaped materials **208** to an inner wall of the elongated shaft **204**. As another example, a polymer **208** may be inserted through the wire cable to create a non-round cross-section. The polymer **208** may be heated and inserted through holes in the wall of the elongated shaft **204** and shaped as needed by a rectangular mandrel.

[0042] As shown in FIG. **3**, which illustrates an inner cross-section A-A of a section of exemplary endovascular device **201**, the control wire **101** may be made from 0.14 mm Nitinol wire. A distal tip of the wire **101** may be gradually grinded to an outer diameter of about 70 μm. The elongated shaft **204** may be made from a 130 cm Nitinol tube with an inner diameter of 0.18 mm which may be bonded to a PTFE covered cable of ten 70 μm Nitinol wires and the distal section may be a single 70 μm wire which may be coiled.

[0043] As shown in FIG. **4**, which illustrates an inner cross-section B-B of a section of exemplary endovascular device **201**, the control wire **101** may be pressed to create flat sections **101-3** of about 0.16 mm×0.12 mm of 30 mm of length. Using a rectangular mandrel, a polymer **208** may be inserted through the wire cable **206** to create a non-round cross-section in areas that overlap the non-round sections of the control wire **101**. As a result, relative axial movement between the control wire **101** and the elongated shaft **204** may be maintained while the axial rotation between the control wire **101** and the elongated shaft **204** (which includes cable **206**) may be prevented.

[0044] FIG. **5** illustrates an inner cross-section C-C of a section of exemplary endovascular device **201**, similar to cross-section B-B of FIG. **4**. Again, as a result, relative axial movement between the control wire **101** and the elongated shaft **204** may be maintained while the axial rotation between the control wire **101** and the elongated shaft **204** (which includes single wire coil **207**) may be prevented.

[0045] In a further embodiment, FIG. **6** illustrates a control wire **601** of an exemplary endovascular device in accordance with the disclosure, which may be deformed or flattened in zone **601-3**, and may be round in other areas along its axis **601-2**. FIG. **7** illustrates an exemplary endovascular device **701** using control wire **601** in accordance with the disclosure. (Solely to illustrate the position of zones **601-2** and **601-3** in endovascular device **701**, with the understanding that control wire **601** is part of endovascular device **701**, FIG. **7** also separately depicts control wire **601** of FIG. **6**, with zones **601-3** and **601-2** generally aligned to endovascular device **701**.) As shown in FIG. **7**, endovascular device **701** may include an elongated shaft **704** which may include a tube **705**, a cable of wires **706**, and a single wire coil **707**. A distal tip **710** of the elongated shaft **704** may be attached to control wire **601**, for example. At a proximal end of the elongated shaft **704**, the control wire **601** may be connected to a slider **211** of a handle **209**, with the elongated shaft **704** connected to the handle **209** to facilitate the relative movement. (In FIG. **7**, handle **209** is not depicted to the same scale as that of elongated shaft **704**.)

[0046] FIG. **8** illustrates an inner cross-section D-D of a section of exemplary endovascular device **701**. The control wire **601** may be made from 0.14 mm Nitinol wire. A distal tip of the wire **601** may be gradually grinded to an outer diameter of about 70 μm. The elongated shaft **704** may be made from a 130 cm Nitinol tube with an inner diameter of 0.18 mm which may be bonded to a PTFE covered cable of ten 70 μm Nitinol wires and the distal section may be a single 70 μm wire which may be coiled.

[0047] As shown in FIGS. **9** and **10**, which illustrates inner cross-sections E-E and F-F of a section of exemplary endovascular device **701**, the control wire **601** may be pressed to create flat sections **101-3** of about 0.16 mm×0.12 mm of 30 mm of length. As mentioned above, in FIGS. **9** and **10**, the cable of wires **706** and the single wire coil **707** of the elongated shaft **704** may be elliptical. This elliptical shape resists relative rotation of the elongated shaft **704** and the control wire **601**, enabling torqueing of the device. Alternatively, other non-symmetrical shapes (e.g., cross-sections) may be employed, consistent with the present disclosure to resist rotation and to permit torqueing.

[0048] In other embodiments, a single wire coil may be provided, extending from a multi-wire cable with a control wire that runs through the core of both. This enables the control wire to steer the more flexible coiled end of the coil, without causing the multi-wire cable to appreciably bend.

[0049] FIG. **11**A illustrates an exemplary endovascular device **1101**, according to various embodiments of the present disclosure. As shown in FIG. **11**A, endovascular device **1101** may include an elongated shaft **1104**, which may include a cable of wires, including a proximal segment **1102**, at least one transition segment **1103**, and a distal segment **1105**. A distal tip **1110** of the elongated shaft **1104** may be attached to control wire **101** (as shown in FIG. **1**), for example. At a proximal end of the elongated shaft **1104**, the control wire **101** may be connected to a slider **211** of a

handle **209**, with the elongated shaft **1104** connected to the handle **209** to facilitate the relative movement. (In FIG. **11**A, handle **209** is not depicted to the same scale as that of elongated shaft **1104**.)

[0050] Hollow shaft **1104** may include a tube (for example, tube **205** of FIG. **2** or tube **705** of FIG. **7**), and the cable of wires may be connected to a distal end of the tube (not shown). The cable may include a proximal segment **1102**, at least one transition segment **1103**, and a distal segment **1105**. Proximal segment **1102** may be configured to transfer torque. In some embodiments, for example, a torque device, such as a torquer, may be threaded over the proximal end of the elongated shaft **1104** and tightened over the proximal end of the elongated shaft **1104**. A rotational force exerted on the proximal end of the elongated shaft **1104**, using the torquer, may cause a rotational force to be applied to a working element located proximate the distal end of the elongated shaft **1104**. The ratio of the rotational force exerted on the proximal end of the elongated shaft **1104** to the rotational force applied to the working element may be approximately 1:1. The position of the torquer over the elongated shaft **1104** may be adjusted.

[0051] In some embodiments, proximal segment **1102** may be more rigid, compared to at least one transition segment **1103** and distal segment **1105**, such that proximal segment **1102** may be configured to transfer torque. Proximal segment **1102** may be formed of a first number of wires, and the first number of wires required to form proximal segment **1102** may be based on certain constraints. For example, certain constraints may include an outer diameter of the cable, an inner diameter of the cable, or an optimal cable angle for torque transfer. In some embodiments, proximal segment **1102** may be formed of about five to 20 wires. For example, proximal segment **1102** may be formed of about nine wires. In another example, proximal segment **1102** may be formed of about ten wires.

[0052] The cable may further include at least one transition segment **1103** adjacent to the proximal segment **1102**. Transition segment **1103** may be configured to provide a gradual transition between the proximal segment **1102** and a distal segment **1105**. In some embodiments, the cable may include about one to ten transition segments **1103**. For example, the cable may include about two transition segments **1103**. The number of transition segments **1103** may vary based on various parameters, including rigidity of proximal segment **1102**, flexibility of distal segment **1105**, length of the elongated shaft **1104**, a length of the cable, or number of wires used to form the cable. Transition segment **1103** may be formed of about two to 19 wires. For example, transition segment **1103** may be formed of about three to six wires. If the cable includes more than one transition segment **1103**, the number of wires used to form each transition segment **1103** may vary. For example, the number of wires used to form each transition segment may decrease as transition segment **1103** moves closer to distal segment **1105**, to thereby provide gradual increase in flexibility from proximal segment **1102** to distal segment **1105**.

[0053] Distal segment **1105** may be configured to be atraumatic, and thus, may be configured to be very flexible. Accordingly, distal segment **1105** may be more flexible than proximal segment **1102** and at least one transition segment **1103**. In order to maintain flexibility, distal segment **1105** may be formed of about one to five wires. For example, distal segment **1105** may be formed of about one wire or two wires, and thus, may enable small coil winding, which may determine the flexibility of distal segment **1105**.

[0054] While proximal segment **1102**, transition segment **1103**, and distal segment **1105** appear to have a constant cable diameter in FIG. **11**A, the segments may not necessarily have a constant diameter. For example, the diameter of transition segment **1103** may be smaller than the diameter of proximal segment **1102**, and the diameter of distal segment **1105** may be smaller than the diameter of the transition segment **1103**. By way of example, the diameter of hollow shaft **1104** may gradually decrease from proximal segment **1102** to distal segment **1105**. Accordingly, coil winding may decrease from proximal segment **1102** to distal segment **1105**, to thereby achieve rigidity at proximal segment **1102**, relative to distal segment **1105**, and flexibility at distal segment **1105**, relative to proximal segment **1102**. Rigidity may gradually decrease from proximal segment **1102** to distal segment **1105**.

[0055] FIG. **11**B illustrates section A of exemplary endovascular device **1101** of FIG. **11**A, in accordance with the disclosure. In addition to decreasing the number of wires, the pitch angle at which the wires are wound may vary from proximal segment **1102** to distal segment **1105**, to thereby transfer maximum torque while maintaining tip flexibility and structural strength of endovascular device **1101**. As seen in FIG. **11**B, proximal segment **1102** may be formed of a first number of wires wound at a first pitch angle α. In addition, at least one transition segment **1103** may be formed of a second number of wires (less than the first number of wires) wound at a second pitch angle β. Finally, distal segment **1105** may be formed of a third number of wires (less than the second number of wires) wound at a third pitch angle θ. As illustrated in FIG. **11**B, the pitch angle may refer to the angle, relative to the bottom planar surface of the hollow shaft **1104**, at which the wires are wound. The pitch angle, at which the wires are wound to form the cable, may increase gradually from proximal segment **1102** to distal segment **1105**. For example, pitch angle α may be smaller than pitch angle β, and pitch angle may be smaller than pitch angle θ. Increasing the pitch angle θ at distal segment **1105** may make distal segment **1105** more bendable. Although FIG. **11**B only illustrates one transition segment **1103** formed of wires wound at pitch angle β, hollow shaft **1104** may include two or more transition segment **1103** at varying pitch angles. For example, hollow shaft **1104** may include a first transition segment and a second transition segment, and the first transition segment may be formed of wires wound at a smaller pitch angle than the wires forming the second transition segment. In some embodiments, hollow shaft **1104** may include at least three transition segments **1103**.

[0056] In some embodiments, the pitch angle may be determined by various parameters, including, for example, a diameter of a winding mandrel, a diameter of the wire, and a number of wires required to form each segment. By way of example, assuming that the diameter of the wire and the initial cable diameter are known, then the diameter of the winding mandrel and the number of wires required may be calculated to obtain the optimal pitch angle. As such, the diameter of the winding mandrel may be increased or decreased to compensate for any changes in the pitch angle.

[0057] In order to provide a gradual transition in flexibility by decreasing the number of wires used from proximal segment **1102** and ultimately to distal segment **1105**, the wires may need to be cut. By way of example, at a distal end

1108 of proximal segment **1102**, one or more wires used to form proximal segment **1102** may be cut or removed during the winding process. Then, the remaining wires used to form proximal segment **1102** may be used to continue winding and forming transition segment **1103**. Likewise, at a distal end **1109** of transition segment **1103**, one or more wires used to form transition segment **1103** may be cut or removed during the winding process. Then, the remaining wires used to form proximal segment **1102** and transition segment **1103** may be used to continue winding and forming distal segment **1105**. If hollow shaft **1104** includes two or more transition segments **1103**, the process may be repeated by removing more wires and continuing to wind the remaining wires to form another transition segment **1103**. As such, at least one common wire may be continuously wound to form proximal segment **1102**, at least one transition segment **1103**, and distal segment **1105**. Therefore, instead of forming separate segments and connecting the segments together, the entire cable with proximal segment **1102**, at least one transition segment **1103**, and distal segment **1105** can be made with the same wire. By providing a continuous, gradual cable without any connection points along the cable, this obviates the need to incorporate rigid connections to connect separate segments together, thereby improving the flexibility of the cable.

[0058] Once wires are cut during the winding process, exposed edges of the cut wires may be dangerous, particularly when endovascular device **1102** needs to be inserted inside the blood vessel. Therefore, as seen in FIG. **11**C, once the winding process is finished, the cable may be post-processed by cutting any excess wires and covering the exposed edges of the cut wires with a material **1106**. By way of example, material **1106** used to cover exposed edges of the cut wires may include any adhesives, epoxy glues, heat shrink, polyether ether ketone (PEEK), or any other bonding material.

[0059] In some embodiments, after wires are cut or removed during the winding process, the pitch angle at which the wires are wound may also change as a result, and thereby reduce the optimal torque transmission of the cable. Accordingly, a diameter of the winding mandrel may need to be adjusted in order to compensate for the wire removal. By way of example, at the distal end **1108** of proximal segment **1102** or at the distal end **1109** of transition segment **1103**, one or more wires may be cut or removed. Therefore, at the distal end **1108** of proximal segment **1102** or at the distal end **1109** of transition segment **1103**, the diameter of the winding mandrel may be decreased in order to compensate for the reduction in the number of wires used to form each segment. By decreasing the diameter of the winding mandrel, the pitch angle, at which the wires are wound to form each segment, may remain optimal without any overlapping of wires. For example, by decreasing the diameter of the winding mandrel, the pitch angle may remain constant without any overlapping of the wires. The diameter of the winding mandrel may be determined based on the number of wires used, the diameter of the wires, and the required pitch angle at each segment.

[0060] FIG. **12**A illustrates an exemplary endovascular device **1201** in a straightened configuration, according to various embodiments of the present disclosure. Endovascular device **1201** may include an elongated sheath **1205** (e.g., tube **205** as depicted in FIG. **2** or tube **705** as depicted in FIG. **7**) and an elongated coil **1204** connected to the distal end of sheath **1205**. Coil **1204** may have a proximal end **1208** and a distal end **1210** and may be formed from a plurality of wires that are wound in a helical arrangement to form a hollow coil having at least one channel extending therethrough. Some or all of the wires of coil **1204** may extend to the coil distal end **1210**, which may form the distal tip of endovascular device **1201**. The wires of coil **1204** may, for example, be made from Nitinol with an outer diameter of approximately 75 μm. In some embodiments, coil **1204** may have an axial length of between approximately 400 and 500 mm. For example, coil **1204** may have an axial length of between approximately 430 mm and 440 mm.

[0061] In some embodiments, sheath **1205** may be a hollow, cylindrical hypotube constructed of an alloy or metal (e.g., nickel-titanium alloy, or Nitinol), stainless steel, a polymer, a synthetic material (e.g., nylon, polyether block amide (PEBA), or PEEK), and/or another suitable material. In some embodiments, sheath **1205** may have an outer diameter of between approximately 0.35 mm and 0.40 mm. For example, sheath **1205** may have an outer diameter of 0.35 mm, 0.36 mm, 0.37 mm, 0.38 mm, 0.39 mm, or 0.40 mm. In some embodiments, sheath **1205** may have an inner diameter of between approximately 0.20 mm and 0.25 mm. In some embodiments, sheath **1205** may have an axial length of between approximately 130 cm and 150 cm. For example, sheath **1205** may have an axial length of approximately 140 cm, 141 cm, or 142 cm. In some embodiments, material composition of sheath **1205** may vary towards the distal end of sheath **1205**. For example, a proximal portion of sheath **1205** may be constructed from a kink-resistant material (e.g., Nitinol) and a distal portion of sheath **1205** may be constructed from a more rigid material (e.g., stainless steel) for improved pushability and to enhance torque transmission from the proximal end of sheath **1205** to coil **1204**.

[0062] Endovascular device **1201** may also include a handle **1209** connected to the proximal end of sheath **1205** that may be actuated by a user to control movement of coil **1204**, including bending and straightening of coil **1204**. In some embodiments, handle **1209** may have a similar configuration as handle **209** depicted in FIG. **2** and may include a slider connected to a control wire (i.e., a core wire) extending through sheath **1205** and coil **1204** (not pictured in FIG. **12**A). In some alternative embodiments, handle **1209** may include a user actuation segment **1222** at its proximal end that is configured for movement relative to sheath **1205**. A core wire (not pictured in FIG. **12**A) may be connected to user actuation segment **1222** and to coil distal end **1210**. As illustrated in FIG. **12**F, movement (e.g., axial movement) of user actuation segment **1222** relative to sheath **1205** may cause the core wire to exert a force on coil distal end **1210**, causing straightening or bending of coil **1204**. In some embodiments, user actuation segment **1222** may be cylindrical, with an outer diameter substantially equal to the outer diameter of sheath **1205**. User actuation segment **1222** may be at least partially hollow and may be constructed of an alloy or metal (e.g., nickel-titanium alloy), stainless steel, a polymer, and/or another suitable material. Although handle **1209** is depicted as including a user actuation segment **1222** in FIG. **12**A, one of ordinary skill will understand that the handle of exemplary endovascular device **1201** may include any suitable mechanism for controlling bending and straightening of elongated coil **1204**, such as a wheel, a

slider, a lever, a joystick, a touchpad, a rotatable cuff, or any other structure configured to control bending and straightening of coil **1204**.

[0063] In some embodiments, handle **1209** may also include an inner member **1224** situated at least partially within user actuation segment **1222** and at least partially within sheath **1205**, with the core wire extending through inner member **1224**. In some embodiments, inner member **1224** may be connected to user actuation segment **1222** or to sheath **1205** in order to guide and support the movement of user actuation segment **1222** relative to sheath **1205**. In some embodiments, inner member **1224** may be configured as the locking inner member disclosed in WO 2019/116102 A2, which is incorporated herein by reference in its entirety.

[0064] Coil **1204** may be formed from a plurality of wires and may include a proximal coil segment **1212**, a first transition segment **1214**, a second transition segment **1216**, and a distal coil segment **1218**. In some embodiments, proximal coil segment **1212** may include coil proximal end **1208** and may be configured to be more rigid than the other segments of coil **1204**, such that proximal coil segment **1212** may be configured to transfer torque to the rest of coil **1204**. Proximal coil segment **1212** may be formed of a first number of wires, and the first number of wires required to form proximal coil segment **1212** may be based on certain constraints. For example, certain constraints may include an outer diameter of the coil, an inner diameter of the coil, or an optimal coil angle for torque transfer. In some embodiments, proximal coil segment **1212** may be formed of about six to 16 wires that are helically wound to form a coil. For example, proximal coil segment **1212** may be formed of ten wires that are helically wound and that extend along the entire axial length of proximal coil segment **1212**. In some embodiments, proximal coil segment **1212** may have an axial length of between approximately 400 mm and 425 mm. For example, proximal coil segment **1212** may have an axial length of approximately 410 mm.

[0065] FIG. **12**B illustrates an enlarged view of proximal coil segment **1212**. As shown, the wires of proximal coil segment **1212** may be wound at a first coil angle α, relative to the bottom planar surface of coil **1204** and, thus, to the longitudinal axis of coil **1204**. In some embodiments, first coil angle α may be an angle of between 55° and 65°. In some embodiments, the number of wires used to form proximal coil segment **1212** may be selected based at least in part on the wire diameter and the diameter of a mandrel upon which proximal coil segment **1212** is formed, so as to achieve the desired first coil angle α. For example, ten wires with outer diameters of 75 μm may be braided on a mandrel with an outer diameter of approximately 0.36 mm to form a proximal coil segment **1212** having the desired first coil angle α of approximately 57°. As another example, nine wires with outer diameters of 85 μm may be braided on a mandrel with an outer diameter of approximately 0.36 mm to form a proximal coil segment **1212** having the desired first coil angle α of approximately 56°.

[0066] Referring again to FIG. **12**A, elongated coil **1204** may additionally include at least two transition segments **1214** and **1216** adjacent to proximal coil segment **1212**. Transition segments **1214** and **1216** may be configured to provide a gradual increase in flexibility between proximal coil segment **1212** and a distal coil segment **1218**. In the embodiment illustrated in FIG. **12**A, coil **1204** may include two transition segments **1214** and **1216**. In some alternative embodiments, coil **1204** may include three transition segments, four transition segments, five transition segments, six transition segments, or any other suitable number of transition segments. The number of transition segments may vary based on various parameters, including rigidity of proximal coil segment **1212**, flexibility of distal coil segment **1218**, the axial length of elongated coil **1204**, or the number of wires used to form coil **1204**.

[0067] First transition segment **1214** may be immediately adjacent to proximal coil segment **1212** and may be formed from fewer wires than proximal coil segment **1212**, such that first transition segment **1214** may be configured for greater flexibility than proximal coil segment **1212**. In some embodiments, first transition segment **1214** may be formed from four to nine wires. For example, first transition segment **1214** may be formed of six wires that are helically wound and that extend along the entire axial length of first transition segment **1214**. In some embodiments, first transition segment **1214** may have an axial length of between approximately 3.0 mm and 8.0 mm. For example, first transition segment **1214** may have an axial length of approximately 5.0 mm.

[0068] FIG. **12**C illustrates an enlarged view of first transition segment **1214**. As shown, the wires of first transition segment **1214** may be wound at a second coil angle β, relative to the bottom planar surface of coil **1204** and, thus, to the longitudinal axis of coil **1204**. In some embodiments, second coil angle β may be an angle of between 55° and 65° and may be larger than the first coil angle α. In some embodiments, the number of wires used to form first transition segment **1214** may be selected based at least in part on the wire diameter and the diameter of a mandrel upon which first transition segment **1214** is formed, so as to achieve desired second coil angle β. For example, six wires with outer diameters of 75 μm may be braided on a mandrel with an outer diameter of approximately 210 μm to form a first transition segment **1214** having the desired second coil angle β of approximately 60°.

[0069] Referring again to FIG. **12**A, second transition segment **1216** may be immediately adjacent to first transition segment **1214** and may be formed from fewer wires than first transition segment **1214**, such that second transition segment **1216** may be configured for greater flexibility than first transition segment **1214**. In some embodiments, second transition segment **1216** may be formed from three to eight wires. For example, second transition segment **1216** may be formed of four wires that are helically wound and that extend along the entire axial length of second transition segment **1216**. In some embodiments, second transition segment **1216** may have an axial length of between approximately 3.0 mm and 8.0 mm. For example, second transition segment **1216** may have an axial length of approximately 5.0 mm. In some embodiments, first transition segment **1214** and second transition segment **1216** may have the same axial length.

[0070] FIG. **12**D illustrates an enlarged view of second transition segment **1216**. As shown, the wires of second transition segment **1216** may be wound at a third coil angle γ, relative to the bottom planar surface of coil **1204** and, thus, to the longitudinal axis of coil **1204**. In some embodiments, third coil angle γ may be an angle of between 65° and 75° and may be larger than the second coil angle β. In some embodiments, the number of wires used to form second transition segment **1216** may be selected based at least in

part on the wire diameter and the diameter of a mandrel upon which second transition segment **1216** is formed, so as to achieve desired third coil angle γ. For example, four wires with outer diameters of 75 μm may be braided on a mandrel with an outer diameter of approximately 210 μm to form a second transition segment **1216** having the desired third coil angle γ of approximately 70°.

[0071] Referring against to FIG. **12**A, distal coil segment **1218** may be immediately adjacent to second transition segment **1216** and may include coil distal end **1210**. Distal coil segment **1218** may be configured to be very flexible such that distal coil segment **1218** may be atraumatic as endovascular device **1201** is advanced through the body. In some embodiments, distal coil segment **1218** may be more flexible than the other segments of coil **1204**, including second transition segment **1216**. Distal coil segment **1218** may be formed of about one to four wires. For example, distal coil segment **1218** may be formed of one wire or of two wires that are helically wound into a coil. Advantageously, forming distal coil segment **1218** from two wires may provide a soft and atraumatic distal coil segment **1218**, while still maintaining the ability of distal coil segment **1218** to transmit torque applied to the proximal end of endovascular device **1201**. In some embodiments, distal coil segment **1218** may have an axial length of between approximately 15 mm and 25 mm. For example, distal coil segment **1218** may have an axial length of approximately 20 mm. Due to the decreasing number of wires between the different segments of coil **1204**, the flexibility of coil **1204** may gradually increase in a longitudinal direction from coil proximal end **1208** to coil distal end **1210**. Advantageously, the decreasing number of wires in coil **1204** may achieve rigidity at proximal coil segment **1212**, relative to distal coil segment **1218**, and flexibility at distal coil segment **1218**, relative to proximal coil segment **1212**. In addition, rigidity may gradually decrease in the longitudinal direction from proximal coil segment **1212** to distal coil segment **1218**. Accordingly, endovascular device **1201** may be easily maneuvered through narrow, tortuous body lumens (such as intracranial vessels) because of the torqueability provided by proximal coil segment **1212** to the rest of elongated coil **1204**, while avoiding injury to the surrounding anatomy because of the flexible, atraumatic distal coil segment **1218** forming the tip of the endovascular device.

[0072] FIG. **12**E illustrates an enlarged view of distal coil segment **1218**. As shown, the wires of distal coil segment **1218** may be wound at a fourth coil angle θ, relative to the bottom planar surface of coil **1204** and, thus, to the longitudinal axis of coil **1204**. In some embodiments, fourth coil angle θ may be an angle of between 77° and 83° and may be larger than the third coil angle γ. In some embodiments, the number of wires used to form distal coil segment **1218** may be selected based at least in part on the wire diameter and the diameter of a mandrel upon which distal coil segment **1218** is formed, so as to achieve desired fourth coil angle θ. For example, two wires with outer diameters of 75 μm may be braided on a mandrel with an outer diameter of approximately 210 μm to form a distal coil segment **1218** having the desired fourth coil angle θ of approximately 80°.

[0073] In addition to decreasing the number of wires along coil **1204**, the coil angle at which the wires are wound may vary from proximal coil segment **1212** to distal coil segment **1218**. The variation in coil angle may allow the transfer of maximum torque from proximal coil segment **1212** to the rest of coil **1204**, while also maintaining the desired flexibility of distal coil segment **1218** and the structural strength of the entire endovascular device **1201**. In some embodiments, the coil angle at which the wires are wound to form coil **1204** may increase gradually from proximal coil segment **1212** to distal coil segment **1218**. For example, second coil angle β may be larger than the coil angle α. Additionally, or alternatively, third coil angle γ may be larger than second coil angle β. Additionally, or alternatively, fourth coil angle θ may be larger than third coil angle γ. Advantageously, an increase in the coil angle may increase the flexibility of the corresponding section of coil **1204**; thus, distal coil segment **1218** may have the largest coil angle and may accordingly be the most flexible segment of coil **1204**. Similarly, proximal coil segment **1212** may have the smallest coil angle and may accordingly be the most rigid segment of coil **1204**.

[0074] In the embodiment illustrated in FIG. **12**A, coil **1204** may have a constant diameter along its entire axial length. For example, proximal coil segment **1212**, first transition segment **1214**, second transition segment **1216**, and distal coil segment **1218** may have a constant outer diameter of between approximately 0.35 mm and 0.40 mm, for example, an outer diameter of 0.35 mm, 0.36 mm, 0.37 mm, 0.38 mm, 0.39 mm, or 0.40 mm. In some alternative embodiments, the diameter of coil **1204** may gradually decrease from proximal coil segment **1212** to distal coil segment **1218**. For example, proximal coil segment **1212** may have an outer diameter of between approximately 0.35 mm and 0.40 mm, and distal coil segment **1218** may have an outer diameter of between approximately 0.32 mm and 0.38 mm. Advantageously, the reduced diameter of distal coil segment **1218** may enable the distal coil segment to have a desired flexibility that is greater than the flexibility of proximal coil segment **1212**. In some embodiments, proximal coil segment **1212**, first transition segment **1214**, second transition segment **1216**, and distal coil segment **1218** may be aligned axially along coil **1204** to form a single, unitary structure with a flexibility that gradually increases from coil proximal end **1208** to coil distal end **1210**.

[0075] FIG. **12**F illustrates an exemplary configuration of endovascular device **1201** in which at least a portion of coil **1204** is bent into a curved configuration, according to various embodiments of the present disclosure. In some embodiments, some or all of distal coil segment **1218** may be configured to bend into the curved configuration. In some embodiments, a core wire (not shown in FIG. **12**F) may extend between a portion of handle **1209** (e.g., user actuation segment **1222**) and a portion of coil **1204** at or near coil distal end **1210**. As shown in FIG. **12**F, axial movement of the core wire (e.g., due to movement of user actuation segment **1222** relative to sheath **1205**) may radially bend coil **1204**, including distal end **1210**, from a straight configuration (e.g., the configuration illustrated in FIG. **12**A) into a curved or angled configuration, or from a curved or angled configuration to a straight configuration or into a different curved or angled configuration. In some embodiments, the bending portion of coil **1204** may be configured to bend in a single direction from the straight configuration (e.g., from a straight configuration towards a left-hand side, but not towards a right-hand side) due to the actuation of handle **1209**. In other embodiments, the bending portion of coil **1204** may be configured to bend in two opposite directions from the straight configuration (e.g., both to the

left-hand side and the right-hand side from the straight configuration) due to the actuation of handle **1209**.

[0076] FIG. **13**A illustrates an interior view of endovascular device **1201**, in accordance with various embodiments of the present disclosure. Endovascular device **1201** may include at least one core wire **1330** extending between handle **1209** and coil distal end **1210** to control bending and straightening of coil **1204**. In the embodiment depicted in FIG. **13**A, the distal end of core wire **1330** may be connected to coil distal end **1210** via a dome cap **1211**, which may be constructed of epoxy and may be rounded to prevent injury to tissue.

[0077] Core wire **1330** may be constructed of an alloy or metal (e.g., nickel-titanium alloy, or Nitinol), stainless steel, a polymer, and/or another suitable material, and may have a polytetrafluoroethylene (PTFE) coating. In some embodiments, core wire **1330** may include zones having different cross-sectional shapes and/or dimensions. For example, core wire **1330** may include core wire zones **1332**, **1334**, and **1336** with circular cross-sections and two or more core wire zones **1333** and **1335** in which the cross-sectional area of core wire **1330** is reduced, relative to core wire zones **1332**, **1334**, and **1336**. In some embodiments, core wire zones **1332**, **1334**, and **1336** may have circular cross-sections with outer diameters of between approximately 0.12 mm and 0.18 mm. For example, core wire zones **1332**, **1334**, and **1336** may have an outer diameter of approximately 0.15 mm.

[0078] In some embodiments, core wire **1330** may have a similar configuration as control wire **101** as depicted in FIG. **1**. For example, core wire zones **1333** and **1335** may have cross-sections that are non-circular (e.g., elliptical, oval-shaped, rectangular, etc.) and may have smaller cross-sectional areas than core wire zones **1332**, **1334**, and **1336**. For example, in some embodiments core wire zones **1333** and **1335** may be formed by selectively flattening or otherwise deforming portions of core wire **1330**. In some alternative embodiments, the non-circular core wire zones **1333** and **1335** may be formed by adhesion of additional materials to portions of core wire **1330** to form a non-round shape. In some alternative embodiments, core wire **1330** as depicted in FIG. **13**A may have a similar configuration as control wire **601** as depicted in FIG. **6**. For example, core wire **1330** may include one core wire zone having a non-circular cross-section. In some further alternative embodiments, core wire **1330** may include zero core wire zones, three core wire zones, four core wire zones, or any other suitable number of core wire zones having non-circular cross-sections. In some embodiments, core wire zone **1333** may have an axial length of between approximately 30 mm and 45 mm (e.g., an axial length of approximately 40 mm). Additionally, or alternatively, core wire zone **1335** may have an axial length of between approximately 20 mm and 30 mm (e.g., an axial length of approximately 26 mm). In some embodiments, core wire zone **1335** may have a shorter axial length than core wire zone **1333**, and approximately 400 mm of core wire **1330** may be provided between the distal end of core wire zone **1335** and the distal end of core wire zone **1333**.

[0079] FIG. **13**B illustrates a cross-sectional view of endovascular device **1201** at coil proximal end **1208**, near the location at which sheath **1205** is connected to proximal coil segment **1212**. A portion of core wire zone **1333** may extend through coil proximal end **1208**. As shown in FIG. **13**B, core wire zone **1333** may have a non-circular cross-section, with a first dimension of the core wire (pictured as the height in FIG. **13**B) being smaller than a second, perpendicular dimension of the core wire (pictured as the width in FIG. **13**B). Although core wire zone **1333** depicted in FIG. **13** has an oval-shaped cross-section, one of ordinary skill will understand that core wire zone **1333** may have any suitable non-circular cross-sectional shape in which the height of the core wire is smaller than the width of the core wire. In some embodiments, core wire zone **1333** may have a height of between approximately 0.10 mm and 0.15 mm. For example, core wire zone **1333** may have a height of approximately 0.12 mm. Additionally, or alternatively, core wire zone **1333** may have a width of approximately 0.15 mm.

[0080] As shown in FIG. **13**B, proximal coil segment **1212** may include ten wires wound into a helical coil, with an opening in the center of proximal coil segment **1212** through which core wire **1330** may extend. Optionally, an anti-rotation mechanism may be provided at or near coil proximal end **1208** to prevent axial rotation between core wire **1330** and the shaft **1205** and coil **1204**, without preventing relative axial movement between core wire **1330** and the shaft **1205** and coil **1204**. In the embodiment of FIG. **13**B, an internal connector **1342** may be provided at coil proximal end **1208**, extending between the inner lumens of sheath **1205** and coil **1204**. An adhesive or bonding material **1344** (e.g., PEEK) may be provided in the spaces between internal connector **1342** and sheath **1205** and/or in the spaces between internal connector **1342** and proximal coil segment **1212**. Thus, internal connector **1342** may secure sheath **1205** and coil **1204** together.

[0081] Internal connector **1342** may be a hollow tube constructed of an alloy or metal (e.g., nickel-titanium alloy, or nitinol), stainless steel, a polymer, and/or another suitable material. In some embodiments, internal connector **1342** may have an axial length of between approximately 3.0 mm and 30 mm. For example, internal connector **1342** may have an axial length of between approximately 4.0 mm and 16 mm. In some embodiments, internal connector **1342** may have an outer diameter of approximately 0.20 mm and an inner diameter of approximately 0.16 mm. In some embodiments, internal connector **1342** may have an elliptical or oval-shaped cross-section (as shown in FIG. **13**B) through which core wire zone **1333** of the core wire may extend. Internal connector **1342** and core wire zone **1333** may be similarly configured in that both features have a smaller first dimension (pictured as the height in FIG. **13**B) and a larger second dimension (pictured as the width in FIG. **13**B. In addition, the inner diameter of internal connector **1342** may be slightly larger than the outer diameter of core wire zone **1333**, such that a small amount of clearance may be provided between the internal connector **1342** and core wire zone **1333**. As a result, internal connector **1342** and core wire zone **1333** may resist relative axial rotation of core wire **1330** relative to sheath **1205** and coil **1204**, while permitting axial movement of core wire **1330** relative to sheath **1205** and coil **1204**. Alternatively, other non-symmetrical shapes (e.g., cross-sections) may be employed, consistent with the present disclosure to resist rotation and to permit torqueing.

[0082] Additionally, or alternatively, a different anti-rotation mechanism may be provided at or near coil proximal end **1208** to prevent axial rotation between core wire **1330** and the shaft **1205** and coil **1204**. For example, one or more polymers similar to polymers **208** in FIGS. **4** and **5** may be inserted between core wire **1330** and sheath **1205** and/or proximal coil segment **1212**. The insertion of the polymers

may prevent relative axial rotation between core wire **1330** and the shaft **1205** and coil **1204**, without preventing relative axial movement between core wire **1330** and the shaft **1205** and coil **1204**. In some further alternative embodiments, one or both of the shaft **1205** and coil **1204** may have an elliptical or oval-shaped cross-section at proximal coil end **1208**, similar to the configurations of cable **706** and coil **707** illustrated in FIGS. **9** and **10**, respectively. This elliptical cross-sectional shape may resist axial rotation of core wire **1330** relative to the shaft **1205** and coil **1204**, enabling torqueing of endovascular device **1201**. Alternatively, other non-symmetrical shapes (e.g., cross-sections) may be employed, consistent with the present disclosure to resist rotation and to permit torqueing.

[0083] FIG. **13**C illustrates a cross-sectional view of endovascular device **1201** along first transition segment **1214** of coil **1204**. First transition segment **1214** may include six wires wound into a helical coil, with an opening in the center of first transition segment **1214** through which core wire **1330** may extend. In some embodiments, and as discussed below, an anti-rotation mechanism may be provided within first transition segment **1214**, so as to prevent axial rotation of core wire **1330** relative to coil **1204** without preventing relative axial movement between core wire **1330** and coil **1204**. In some alternative embodiments, first transition segment **1214** of the coil may be provided without an anti-rotation mechanism. In such embodiments, core wire **1330** may have a round cross-sectional shape within first transition segment **1214**, similar to core wire zones **1332**, **1334**, and **1336**.

[0084] In some embodiments, a polymer **1346** may be provided within first transition segment **1214** as an anti-rotation mechanism. For example, one or more polymers **1346**, such as PEEK, may be inserted through coil **1204** to form a non-round cross-section of the inner lumen of first transition segment **1214**. A core wire zone **1335** with a reduced cross-sectional area may extend along polymer **1346**, thus forming an anti-rotation mechanism of first transition segment **1214**. As shown in FIG. **13**C, core wire **1330** may have an oval-shaped cross-section at core wire zone **1335**; alternatively, core wire **1330** may have any suitable cross-sectional shape at core wire zone **1335**, such as a rectangular cross-section. In some embodiments, core wire **1330** may have a height of between approximately 0.10 mm and 0.15 mm at core wire zone **1335**. For example, core wire **1330** may have a height of approximately 0.12 mm at core wire zone **1335**. Coil wire zone **1335** may have an axial length that is equal to or shorter than the axial length of coil wire zone **1333**. In some embodiments, core wire zone **1335** may have an axial length of between approximately 20 mm and 30 mm (e.g., an axial length of approximately 26 mm).

[0085] FIG. **13**D illustrates a cross-sectional view of endovascular device **1201** along second transition segment **1216** of the coil, and FIG. **13**E illustrates a cross-sectional view of endovascular device **1201** along distal coil segment **1218**. As shown, second transition segment **1216** may include four wires wound into a helical coil, with an opening in the center of second transition segment **1216** through which core wire **1330** may extend. Additionally, or alternatively, distal coil segment **1218** may include two wires wound into a helical coil, with an opening in the center of distal coil segment **1218** through which core wire **1330** may extend. In some embodiments, the distal-most portion of core wire **1330** (which may have an axial length of, e.g., between approximately 20 mm and 40 mm) may have an outer diameter that is smaller than 0.15 mm or, in some embodiments, smaller than 0.12 mm.

[0086] FIG. **14** illustrates an exemplary method **1400** of manufacturing an elongated coil of an endovascular device. One of ordinary skill will understand that manufacturing method **1400** disclosed herein is merely exemplary and that other methods could be used to manufacture elongated coils of an endovascular device as disclosed herein. Moreover, exemplary method **1400** may be used to manufacture any suitable coil of an endovascular device, including and not limited to cable **206** (optionally, including coil **207**), cable **706** (optionally, including coil **707**), elongated shaft **1104**, or elongated coil **1204**. Although exemplary method **1400** as disclosed herein describes the manufacturing of an elongated coil with a proximal coil segment, a distal coil segment, and two transition segments between the proximal and distal coil segments, one of ordinary skill will understand that an elongated coil with any suitable number of transition segments may be manufactured according to method **1400**, with at least one parameter of the elongated coil (e.g., number of wires, wire material(s), wire gauge, coil diameter, spacing between individual wires, and/or spacing between groups of wires) differing between each segment. For example, an exemplary coil manufactured according to method **1400** may include one transition segment, three transition segments, four transition segments, five transition segments, six transition segments, seven transition segments, eight transition segments, or any other suitable number of transition segments between the proximal and distal coil segments of the coil.

[0087] In step **1402** of method **1400**, beginning from the proximal end of the elongated coil, between six wires and 16 wires (e.g., ten wires) may be helically wound towards the distal end of the elongated coil to form a proximal coil segment of the elongated coil. The ten wires may be continuously wound so as to form the proximal coil segment of the elongated coil as a single unitary structure. In some embodiments, the wires may be wound on a mandrel having a shape, dimensions, and configuration selected to produce a desired shape and size of the elongated coil. In step **1404** of method **1400**, upon forming the distal end of the proximal coil segment of the elongated coil, a predetermined number (e.g., four) of the wires in the proximal coil segment may be cut or otherwise removed. In step **1406** of method **1400**, the first transition segment of the coil may be formed by continuously winding the remaining wires towards the distal end of the elongated coil. The first transition segment may include between four wires and nine wires (e.g., six wires). In some embodiments, the six wires may be wound along a corresponding section of the mandrel. In step **1408** of method **1400**, upon forming the distal end of the first transition segment, a predetermined number (e.g., two) of the wires in the first transition segment may be cut or otherwise removed. In step **1410** of method **1400**, the second transition segment of the coil may be formed by continuously winding the remaining wires towards the distal end of the elongated coil. The second transition segment may include between three wires and eight wires (e.g., four wires). In some embodiments, the four wires may be wound along a corresponding section of the mandrel. In step **1412** of method **1400**, upon forming the distal end of the second transition segment, a predetermined number (e.g., two) of the wires in the second transition segment may be cut or

otherwise removed. In step **1414** of method **1400**, the remaining wires may be continuously wound to form the distal coil segment of the elongated coil. The distal coil segment may include between one wire and four wires (e.g., two wires). In optional step **1416** of method **1400**, after the wires are cut during the manufacturing method **1400**, the elongated coil may be post-processed by cutting any excess wires and/or by covering exposed edges of the cut wires with a protective material, such as material **1106**.

[0088] Advantageously, by cutting or otherwise removing wires from the elongated coil in steps **1404**, **1408**, and **1414**, a gradual increase in flexibility may be formed from the proximal end of the elongated coil to the distal end of the elongated coil. In addition, forming the elongated coil by gradually removing wires between coil segments may allow the entire coil to be formed as a single, unitary structure and obviate the need to incorporate rigid connections to connect separate segments together, thereby improving the flexibility of the coil.

[0089] FIG. **15** illustrates an exemplary endovascular device **1501**, according to various embodiments of the present disclosure. Endovascular device **1501** may include an elongated coil **1504**, an elongated sheath **1505** connected to the proximal end of coil **1504**, and a handle **1509** connected to the proximal end of sheath **1505**. Coil **1504** may be formed from a plurality of helically-wound wires and may have a similar configuration as elongated coil **1204** as depicted in FIG. **12**A: coil **1504** may include a proximal coil segment **1512**, a first transition segment **1514**, a second transition segment **1516**, and a distal coil segment **1518**. Proximal coil segment **1512** may be formed from between five and 12 nitinol wires (e.g., eight nitinol wires) and between one wire and four wires (e.g., two wires **1504***a*) that are formed of nitinol with radiopaque cores (e.g., 30% tantalum cores). These wires may be helically-wound to form proximal coil segment **1512**, with a predetermined number (e.g., four) of the nitinol wires being cut at the distal end of proximal coil segment **1512**. The remaining wires (for example, between three and five nitinol wires and between one and four nitinol wires with radiopaque cores) may be helically wound to form first transition segment **1514**, with at least one additional nitinol wire (for example, another two nitinol wires) being cut at the distal end of first transition segment **1514**. The remaining wires (for example, between two and four nitinol wires and between one and four nitinol wires with radiopaque cores) may be helically wound to form second transition segment **1516**, with the remaining nitinol wires without radiopaque cores being cut at the distal end of second transition segment **1516**. Distal coil segment **1518** may be formed from the nitinol wires with radiopaque cores. Accordingly, the entire axial length of elongated coil **1504** may be radiopaque.

[0090] FIG. **16** illustrates an exemplary endovascular device **1601**, according to various embodiments of the present disclosure. Endovascular device **1601** may include an elongated coil **1604** extending between a coil proximal end **1608** and a coil distal end **1610**, an elongated sheath **1605** connected to coil proximal end **1608**, and a handle **1609** connected to the proximal end of sheath **1605**. Handle **1609** may be connected to at least one core wire **1630** extending through sheath **1605** and coil **1604**, and configured to control movement (e.g., bending and straightening) of at least a portion of coil **1604**. Elongated coil **1604** may be formed from a plurality of helically-wound wires, at least some of which extend from coil proximal end **1608** to coil distal end **1610**. Elongated coil **1604** may include a proximal coil segment **1612**, a distal coil segment **1618**, and at least one transition segment between the proximal and distal coil segments. In the example of FIG. **16**, elongated coil **1604** may include two transition segments, a first transition segment **1614** and a second transition segment **1616** situated distally from the first transition segment. However, one of ordinary skill will understand that elongated coil **1604** may include any suitable number of transition segments, with at least one parameter of elongated coil **1604** differing between each segment. For example, elongated coil **1604** may include one transition segment, three transition segments, four transition segments, five transition segments, six transition segments, seven transition segments, eight transition segments, or any other suitable number of transition segments between the proximal and distal coil segments of elongated coil **1604**.

[0091] In the example of FIG. **16**, proximal coil segment **1612** may be formed from six to 16 wires (e.g., ten wires), first transition segment **1614** may be formed from four to nine wires (e.g., six wires), second transition segment **1616** may be formed from three to eight wires (e.g., four wires), and distal coil segment **1618** may be formed from one to four wires (e.g., one wire or two wires). However, as an alternative to, or in addition to, varying the coil angle between the segments of elongated coil **1604** to vary the flexibility between coil segments, spaces **1650** may be formed between the wound wires (i.e., the windings) of coil **1604** in one or more of the coil segments. For example, as shown in FIG. **16**, spaces **1650** may be formed between each wire in a distal portion **1618***a* of distal coil segment **1618**, which may advantageously increase the flexibility of distal portion **1618***a*. In some embodiments, spaces **1650** may be provided along the entire axial length of distal coil segment **1618**. Additionally, or alternatively, similar spaces may be provided between the windings in second transition segment **1616**, first transition segment **1614**, and/or proximal coil segment **1612**. In some embodiments, at least a portion of coil **1604** (e.g., proximal coil segment **1612**) may lack spaces **1650** between the windings therein to ensure an increase in coil flexibility towards the distal end of coil **1604**.

[0092] In some embodiments, spaces **1650** between the windings of coil **1604** may be evenly spaced along the longitudinal axis of coil **1604** and may be approximately equal in axial length. In some alternative embodiments, the axial lengths of spaces **1650** may vary along the longitudinal axis of coil **1604**, so as to render certain portions of coil **1604** more flexible than other portions of coil **1604**. In some embodiments, spaces **1650** may be formed during the process of winding the plurality of wires to form elongated coil **1604** by adding gaps between the wires at a predetermined frequency. In some alternative embodiments, spaces **1650** may be formed by removing one or more wires from the desired portion(s) of elongated coil **1604**, e.g., by cutting. Optionally, the wires in proximity to spaces **1650** may be reinforced to maintain spaces **1650** and to hold the wires at their intended coil angle(s), for example, by heat treating the wires to reinforce the wires at their intended coil angle(s). Advantageously, the formation of spaces **1650** within elongated coil **1604** may increase the flexibility of the corresponding section(s) of the coil. For example, spaces **1650**

may be formed within a portion or within all of distal coil segment **1618** to form a soft, atraumatic distal tip of endovascular device **1601**.

[0093] FIG. **17**A illustrates an exemplary endovascular device **1701**, according to various embodiments of the present disclosure. FIG. **17**B illustrates an interior view of endovascular device **1701**. Endovascular device **1701** may include an elongated coil **1704** extending between a coil proximal end **1708** and a coil distal end **1710**, an elongated sheath **1705** connected to coil proximal end **1708**, and a handle **1709** connected to the proximal end of sheath **1705**. Handle **1709** may be connected to at least one core wire **1730** extending through sheath **1705** and coil **1704**, and configured to control movement (e.g., bending and straightening) of at least a portion of coil **1704**. Elongated coil **1704** may be formed from a plurality of helically-wound wires, at least some of which extend from coil proximal end **1708** to coil distal end **1710**. Elongated coil **1704** may include a proximal coil segment **1712**, a distal coil segment **1718**, and at least one transition segment between the proximal and distal coil segments. In the example of FIGS. **17**A and **17**B, elongated coil **1704** may include two transition segments, a first transition segment **1714** and a second transition segment **1716** situated distally from the first transition segment. However, one of ordinary skill will understand that elongated coil **1704** may include any suitable number of transition segments, with at least one parameter of elongated coil **1704** differing between each segment. For example, elongated coil **1704** may include one transition segment, three transition segments, four transition segments, five transition segments, six transition segments, seven transition segments, eight transition segments, or any other suitable number of transition segments between the proximal and distal coil segments of elongated coil **1704**.

[0094] In some embodiments, the gauge of the wires forming elongated coil **1704** may vary between the different coil segments such that the flexibility of coil **1704** may differ between segments. In the example shown in FIGS. **17**A and **17**B, elongated coil **1704** may include a proximal coil segment **1712**, a first transition segment **1714**, a second transition segment **1716**, and a distal coil segment **1718**. The wire pitch may be larger in proximal coil segment **1712** than in first transition segment **1714**; additionally, or alternatively, the wire pitch may be larger in first transition segment **1714** than in second transition segment **1716**; additionally, or alternatively, the wire pitch may be larger in second transition segment **1716** than in distal coil segment **1718**. In some embodiments, the outer diameter of elongated coil **1704** may remain substantially constant between coil proximal end **1708** and coil distal end **1710**. In some embodiments, to achieve a desired flexibility of elongated coil **1704**, the variable wire gauge of elongated coil **1704** may be provided in addition to a variation of the coil angle between the segments of elongated coil **1704** (for example, as shown in FIGS. **12**A-**12**E) and/or in addition to adding spaces between the windings in some or all of the segments of elongated coil **1704** (for example, as shown in FIG. **16**).

[0095] Advantageously, decreasing the wire gauge may increase the flexibility of the corresponding section of coil **1704**; thus, distal coil segment **1718** may have the smallest wire gauge and may accordingly be the most flexible segment of elongated coil **1704**. In addition, proximal coil segment **1712** may have the largest wire gauge and may accordingly be the most rigid segment of elongated coil **1704**.

[0096] In another embodiment, a first portion of elongated coil **1704** may have a wire pitch of between approximately 1.2 mm and 1.6 mm. A second portion of elongated coil **1704** that is distal to the first portion may have a wire pitch of between approximately 0.50 mm and 0.56 mm. A third portion of elongated coil **1704** that is distal to the second portion may have a wire pitch of between approximately 0.30 mm and 0.34 mm. A fourth portion of elongated coil **1704** that is distal to the third portion may have a wire pitch of between approximately 0.145 mm and 0.165 mm. Optionally, a fifth portion of elongated coil **1704** that is distal to the fourth portion may have a wire pitch of between approximately 0.2 mm and 0.3 mm.

[0097] FIG. **18**A illustrates an exemplary core wire **1830** of an endovascular device. Core wire **1830** may include core wire zones **1332**, **1333**, and **1334**, as depicted in FIG. **13**A, as well as a core wire zone **1835** distal to core wire zone **1334**. Core wire zone **1835** may have the same or a similar non-circular cross-section as core wire zone **1333** and an axial length of between approximately 20 mm and 30 mm (e.g., an axial length of approximately 26 mm). In some embodiments, core wire zone **1835** may have a shorter axial length than core wire zone **1333**, and approximately 400 mm of the core wire **1830** may be provided between the distal end of core wire zone **1835** and the distal end of core wire zone **1333**.

[0098] As illustrated in FIG. **18**A, core wire **1830** may additionally include a distal end portion **1870**, which may be adjacent to core wire zone **1835** and may extend to, and include, the distal tip **1839** of the core wire. The core wire distal end portion **1870** may have an axial length of between approximately 30 mm and 50 mm (e.g., an axial length of approximately 40 mm). In some embodiments, the height of core wire **1830** may be smaller in core wire distal end portion **1870** than in any other portion of the core wire. In some embodiments, the core wire distal end portion **1870** may have a smaller cross-sectional area than the rest of the core wire.

[0099] Although the core wire distal end portion **1870** is depicted in FIG. **18**A as including a bend **1837**, the core wire **1830** (including core wire distal end portion **1870**) may be biased in a straightened configuration. In some embodiments, core wire distal end portion **1870** may be flexible such that core wire distal end portion **1870** may be bent or doubled back to form a core wire bend **1837**, at which the core wire **1830** may change from a distal axial direction (e.g., to the right in FIG. **18**A) to a proximal axial direction (e.g., to the left in FIG. **18**A). The core wire distal end portion **1870** may include a first loop portion **1836** extending between core wire zone **1835** and bend **1837** and a second loop portion **1838** extending between bend **1837** and distal tip **1839**. In the configuration of FIG. **18**A, the core wire bend **1837** may be formed such that first loop portion **1836** and second loop portion **1838** may have approximately equal axial lengths. For example, first loop portion **1836** and second loop portion **1838** may both have an axial length of approximately 20 mm.

[0100] FIG. **18**B illustrates an interior view of an endovascular device **1801** that includes core wire **1830**. Endovascular device **1801** may include handle **1209**, elongated sheath **1205**, and elongated coil **1204**, as depicted in FIG.

13A; elongated coil **1204** depicted in FIG. **18**B may include a proximal coil segment **1212**, a first transition segment **1214**, a second transition segment **1216**, and a distal coil segment **1218**. FIG. **18**B illustrates endovascular device **1801** in a straightened configuration with core wire **1830** extending through an inner channel **1802***a* that runs between the proximal end of elongated sheath **1205** and the coil distal end **1210**. Inner channel **1802***a* may be formed by the inner lumens of elongated sheath **1205** and coil **1204**. As shown in FIG. **18**B, core wire **1830** may be situated within endovascular device **1801** in the bent configuration illustrated in FIG. **18**A. The proximal end of core wire **1830** may be secured to a portion of handle **1209**. Core wire **1830** may extend through the inner channel **1802***a* to a location at or near the coil distal end **1210**; as a result, the core wire distal end portion **1870** may be situated at least partially within the distal coil segment **1218**. In some embodiments, core wire **1830** may be situated within the endovascular device **1801** such that the core wire bend **1837** may be situated at or near the coil distal end **1210**. Accordingly, the core wire bend **1837** may constitute the distal-most portion of the core wire **1830**. The second loop portion **1838** may extend proximally from the core wire bend **1837** so that the core wire distal tip **1839** may be situated proximally from bend **1837** and from the coil distal end **1210**. In some embodiments, the core wire bend **1837** may be encompassed within a dome cap **1811**, which may be constructed of epoxy and may be rounded to prevent injury to tissue. Dome cap **1811** may be formed, in part, by filling the inner channel **1802***a* with epoxy near the coil distal end **1210**, such that the epoxy covers the core wire bend **1837** and contacts the walls of the inner channel **1802***a*. Accordingly, dome cap **1811** may bond the core wire bend **1837** to the coil distal end **1210**.

[0101] As shown in FIG. **18**B, at least a portion of the core wire distal end portion **1870** may be situated within the distal coil segment **1218**. Accordingly, the first loop portion **1836** and second loop portion **1838** of the core wire may both extend at least partially through distal coil segment **1218**. In some embodiments, the core wire distal end portion **1870** (including first loop portion **1836** and second loop portion **1838**) may have a height of between approximately 0.030 mm and 0.040 mm. For example, the core wire distal end portion **1870** may have a height of approximately 0.036 mm. Additionally, or alternatively, the core wire distal end portion **1870** may have a width of between approximately 0.05 mm and 0.15 mm. For example, the core wire distal end portion **1870** may have a width of approximately 0.11 mm.

[0102] In some embodiments, a movement restrictor **1846** may be provided within the distal coil segment **1218** to prevent axial rotation of the core wire **1830** relative to the coil **1204** without preventing relative axial movement between the core wire **1830** and the coil **1204**. For example, a movement restrictor **1846** with a similar configuration as the adhesive or bonding material **1344** depicted in FIG. **13**A may be provided at least partially within the distal coil segment **1218** as an anti-rotation mechanism. The movement restrictor **1846** may include a polymer (e.g., PEEK), an adhesive, a weld, and/or any other suitable material. The material of movement restrictor **1846** may be inserted through coil **1204** and may be situated at least partially within inner channel **1802***a*; accordingly, movement restrictor **1846** may form a narrowing of inner channel **1802***a*. In the configuration of FIG. **18**B, first loop portion **1836** of the core wire may be situated in the center of the inner channel **1802***a*, such that the first loop portion **1836** is not in contact with the distal coil segment **1218** or movement restrictor **1846**. Second loop portion **1838** may be situated in closer proximity to distal coil segment **1218** and at least one surface of second loop portion **1838** may be positioned against, and in contact with, the movement restrictor **1846**. In some embodiments, movement restrictor **1846** may protrude into inner channel **1802***a* to form a step, with the at least one surface of the second looped portion **1838** configured to be positioned against the step. The movement restrictor **1846** may bond the second loop portion **1838** of the core wire to a wall of inner channel **1802***a*, thus preventing relative axial and rotational movement between the coil **1204** and second loop portion **1838** and distal tip **1839**. Thus, movement restrictor **1846** may be configured both as an anti-rotation mechanism for core wire **1830** and as a bond between the second loop portion **1838** and the distal coil segment **1218**. Because the second loop portion **1838** of the core wire may extend proximally beyond the movement restrictor **1846**, the bond between the core wire and the wall of inner channel **1802***a* may be situated distally from distal tip **1839** of the core wire.

[0103] In some alternative embodiments, movement restrictor **1846** may include an insert situated within inner channel **1802***a*. For example, movement restrictor **1846** may have a similar configuration as internal connector **1342**, as depicted in FIG. **13**A, or another ring-shaped insert and may be connected to the wall of inner channel **1802***a*. Additionally, or alternatively, the insert of movement restrictor **1846** may be configured as a partial obstruction within elongated coil **1204** that is connected to the wall of inner channel **1802***a*.

[0104] FIG. **18**C illustrates an enlarged view of a distal portion of the endovascular device **1801** in the straightened configuration. Core wire **1830** may be bonded to coil **1204** by dome cap **1811** and by movement restrictor **1846**; apart from these two points of connection, core wire **1830** may be configured for movement relative to coil **1204**. As shown in FIG. **18**C, second loop portion **1838** of the core wire may be provided between first loop portion **1836** and distal coil segment **1218**. However, when endovascular device **1801** is in the straight configuration depicted in FIG. **18**C, second loop portion **1838** may be spaced apart from distal coil segment **1218** such that a gap may be provided between the second loop portion **1838** and the walls of inner channel **1802***a*. Movement restrictor **1846** and dome cap **1811** may both extend between coil **1204** and core wire **1830**, thus bonding the coil and core wire together. In some embodiments, core wire bend **1837** may be situated evenly with the distal end **1210** of the coil. Alternatively, core wire bend **1837** may be situated proximally from coil distal end **1210**.

[0105] As shown in FIG. **18**C, the second loop portion **1838** may extend proximally beyond movement restrictor **1846**. As a result, distal tip **1839** of the core wire may be situated proximally from movement restrictor **1846**. Alternatively, distal tip **1839** may be placed in contact with movement restrictor **1846**. In some embodiments, the transition **1835***t* between core wire zone **1835** and the core wire distal end portion **1870** may be situated between the proximal and distal ends of movement restrictor **1846** while endovascular device **1801** is in the straight configuration depicted in FIG. **18**C. In addition, gaps may be formed between the wall of inner channel **1802***a* and the first loop portion **1836** and second loop portion **1838**. That is, apart

from the connections between core wire **1830** and coil **1204** formed by movement restrictor **1846** and dome cap **1811**, the rest of core wire distal end portion **1870** may be spaced apart from the walls of inner channel **1802***a* when the endovascular device is in the straight configuration.

[0106] FIG. **18**D illustrates the distal portion of endovascular device **1801** in a curved configuration. The curved configuration of FIG. **18**D may be effected by application of a proximally-directed force on core wire **1830** (which may be caused, for example, by proximal movement of user actuation segment **1222** relative to elongated sheath **1205**). Due to its relatively small cross-sectional area, core wire distal end portion **1870** may have a lower moment of inertia relative to the rest of the core wire. As a result, axially-directed force application on core wire **1830** may cause first loop portion **1836** and second loop portion **1838** of the core wire to buckle from their respective straightened configurations into curved configurations, without other portions of core wire **1830** buckling. Due to the bonds between core wire distal end portion **1870** and coil **1204** that are formed by dome cap **1811** and by movement restrictor **1846**, buckling of first loop portion **1836** and second loop portion **1838** may force the distal portion of coil **1204** to radially bend from the straight configuration of FIG. **18**C into the curved configuration of FIG. **18**D. In some embodiments, movement restrictor **1846** may be configured as a hinge of core wire distal end portion **1870** by permitting rotation of second loop portion **1838** but preventing axial movement of second loop portion **1838**. As a result, first loop portion **1836** and second loop portion **1838** may buckle under lower applied axial forces, compared to a configuration in which the end of second loop portion **1838** was fixed against rotation. Advantageously, the hinge of movement restrictor **1846** may improve steerability of coil distal end **1210** by reducing the magnitude of force needed to cause bending of the distal end of endovascular device **1801**.

[0107] In some embodiments, the entire length of coil **1204** distal to movement restrictor **1846** may bend due to axial force application on core wire **1830**. As a result, some or all of distal coil segment **1218** may be configured to bend due to axial force application on core wire **1830**. Dome cap **1811** may secure core wire bend **1837** against movement relative to coil distal end **1210**. Similarly, movement restrictor **1846** may secure the portion of second loop portion **1838** that is in contact with movement restrictor **1846** against movement relative to the portion of coil **1204** that is in contact with movement restrictor **1846**. However, the sections of first loop portion **1836** and second loop portion **1838** between dome cap **1811** and movement restrictor **1846** may freely move within coil **1204** and may buckle or otherwise distort within coil **1204** when a force is applied to core wire **1830**. In addition, and as illustrated in FIG. **18**D, the proximal movement of core wire **1830** may pull core wire transition **1835***t* in a proximal direction relative to coil **1204**. In some embodiments, core wire distal end portion **1870** may be configured such that repeated exertions of force on core wire **1830** (e.g., pulling core wire **1830** in a proximal direction) may result in consistent directional flexing of the core wire **1830**. This may be due to the bonds between core wire **1830** and coil **1204** that are formed by dome cap **1811** and movement restrictor **1846**, as well as to the non-circular cross-sectional shape of core wire distal end portion **1870**. Specifically, due to the aforementioned shape and the placement of core wire distal end portion **1870** within coil **1204**, core wire distal end portion **1870** may preferentially bend into the configuration depicted in FIG. **18**D when an axially-directed force is exerted on core wire **1830**.

[0108] Advantageously, looped core wire **1830** may reduce the magnitude of force required to effect bending of the distal end of endovascular device **1801**. Specifically, the low moment of inertia of core wire distal end portion **1870**, combined with the hinge of movement restrictor **1846** and the arrangement of core wire portions **1836** and **1838** within coil distal segment **1218**, may enable core wire distal end portion **1870** to buckle (and, thus, enable bending of endovascular device **1801**) under the application of less than half the force that is required to bend endovascular devices known in the art that do not incorporate a looped core wire. As a result, the looped core wire **1830** may provide more exact steering of the distal end of endovascular device **1801**, since less force is required to bend the distal end of endovascular device **1801** into a desired curved configuration. In addition, endovascular device **1801** may have a soft, atraumatic tip due to the coil arrangement in distal coil segment **1218** and the configuration of dome cap **1811** as a rounded, atraumatic edge of endovascular device **1801**. Accordingly, endovascular device **1801** may be easily maneuvered through narrow, tortuous lumens of the body (such as intracranial vessels) due to the improved steering provided by looped core wire **1830**, without causing injury to the surrounding anatomy.

[0109] The foregoing description has been presented for purposes of illustration. It is not exhaustive and is not limited to precise forms or embodiments disclosed. Modifications and adaptations of the embodiments will be apparent from consideration of the specification and practice of the disclosed embodiments. While certain components have been described as being coupled to one another, such components may be integrated with one another or distributed in any suitable fashion.

[0110] Moreover, while illustrative embodiments have been described herein, the scope includes any and all embodiments having equivalent elements, modifications, omissions, combinations (e.g., of aspects across various embodiments), adaptations and/or alterations based on the present disclosure. The elements in the claims are to be interpreted broadly based on the language employed in the claims and not limited to examples described in the present specification or during the prosecution of the application, which examples are to be construed as nonexclusive. Further, the steps of the disclosed methods can be modified in any manner, including reordering steps and/or inserting or deleting steps.

[0111] The features and advantages of the disclosure are apparent from the detailed specification, and thus, it is intended that the appended claims cover all systems and methods falling within the true spirit and scope of the disclosure. As used herein, the indefinite articles "a" and "an" mean "one or more." Similarly, the use of a plural term does not necessarily denote a plurality unless it is unambiguous in the given context. Words such as "and" or "or" mean "and/or" unless specifically directed otherwise. Further, since numerous modifications and variations will readily occur from studying the present disclosure, it is not desired to limit the disclosure to the exact construction and operation illustrated and described, and accordingly, all suitable modifications and equivalents may be resorted to, falling within the scope of the disclosure.

[0112] Other embodiments will be apparent from consideration of the specification and practice of the embodiments disclosed herein. It is intended that the specification and examples be considered as example only, with a true scope and spirit of the disclosed embodiments being indicated by the following claims.

What is claimed is:

1. An intravascular device, comprising:

an elongated sheath having a proximal end and a distal end, the elongated sheath being sized and configured to traverse human vasculature; and

an elongated coil secured relative to the distal end of the elongated sheath, the elongated coil extending between a proximal end of the coil and a distal end of the coil to define a longitudinal axis, wherein the elongated coil comprises:

a first coil segment formed from a plurality of wires, wherein the wires of the first coil segment are helically-wound in the first coil segment at a first coil angle relative to the longitudinal axis,

a second coil segment distal to the first coil segment, the second coil segment formed from a first subset of the plurality of wires, wherein the first subset of wires is helically-wound in the second coil segment at a second coil angle that is different from the first coil angle, and

a third coil segment distal to the second coil segment, the third coil segment formed from a second subset of the plurality of wires, wherein the second subset of wires is helically-wound in the third coil segment at a third coil angle that is different from the first coil angle and the second coil angle,

wherein the coil segments of the elongated coil are configured such that flexibility of the elongated coil increases in a longitudinal direction toward the distal end of the elongated coil.

2. The intravascular device of claim **1**, wherein the plurality of wires comprises between six wires and 16 wires, the first subset of wires comprises between three wires and eight wires, and the second subset of wires comprises one wire or two wires.

3. The intravascular device of claim **2**, wherein the plurality of wires comprises ten wires, the first subset of wires comprises four wires, and the second subset of wires comprises two wires.

4. The intravascular device of claim **1**, wherein the second coil angle is larger than the first coil angle and smaller than the third coil angle.

5. The intravascular device of claim **1**,

wherein the first coil angle is between 55° and 65°, the second coil angle is between 65° and 75°, and the third coil angle is between 75° and 85°.

6. The intravascular device of claim **1**, wherein the wires of the second subset of wires are constructed at least partially of a first material and the remaining wires of the plurality of wires are constructed of a second material that is different from the first material.

7. The intravascular device of claim **6**, wherein wires extending to the distal end of the elongated coil are constructed at least partially from the first material.

8. The intravascular device of claim **1**, wherein at least one wire of the plurality of wires has a distal end that is situated proximally from the distal end of the elongated coil.

9. The intravascular device of claim **1**, further comprising:

a fourth coil segment situated between the first coil segment and the second coil segment, the fourth coil segment formed from a third subset of the plurality of wires that includes more wires than the first and second subsets of wires,

wherein the third subset of wires is helically-wound in the fourth coil segment at a fourth coil angle that is larger than the first coil angle and smaller than the second coil angle.

10. The intravascular device of claim **9**, wherein the third subset of wires comprises between four wires and nine wires.

11. The intravascular device of claim **10**, wherein the third subset of wires comprises six wires.

12. The intravascular device of claim **9**, wherein the third coil segment has a greater axial length than the second coil segment and the fourth coil segment.

13. The intravascular device of claim **9**, wherein the fourth coil angle is between 55° and 65°.

14. The intravascular device of claim **1**, wherein spaces are formed between windings of the elongated coil in a first region of the elongated coil.

15. The intravascular device of claim **14**, wherein the first region of the elongated coil is situated within the third coil segment and extends axially to the distal end of the elongated coil, the spaces between the windings being spaced at a regular interval between windings.

16. The intravascular device of claim **1**, wherein a wire gauge of the elongated coil decreases toward the distal end of the elongated coil.

17. The intravascular device of claim **1**, wherein material composition of the elongated sheath varies toward the distal end of the elongated sheath.

18. The intravascular device of claim **1**, further comprising:

an elongated core wire arranged at least partially within the sheath and configured such that when the core wire is moved axially, the distal end of the elongated coil bends radially,

wherein the core wire is doubled back in a loop within the elongated coil such that a terminal distal end of the core wire is spaced from the distal end of the elongated coil.

19. The intravascular device of claim **18**, further comprising:

a movement restrictor situated at least partially within the elongated coil, the movement restrictor being configured to limit axial movement of the terminal distal end of the core wire in at least one axial direction relative to the elongated coil and to permit the loop of the core wire to buckle, resulting in a bend in the distal end of the elongated coil, when an axial force is exerted on the core wire.

20. The intravascular device of claim **9**,

wherein the coil segments of the elongated coil are configured to have differing flexibilities, and

wherein the coil segments of the elongated coil are aligned axially along the elongated coil to form a unified structure of the elongated coil that has axially variable flexibility.

* * * * *