US 20180351663A1

(19) **United States**

(12) **Patent Application Publication**

WANGARD et al.

(10) **Pub. No.: US 2018/0351663 A1**

(43) **Pub. Date: Dec. 6, 2018**

(54) **SYSTEM AND METHOD FOR OVER THE AIR ANALYZING**

(71) Applicant: **Rohde & Schwarz GmbH & Co. KG**, Munich (DE)

(72) Inventors: **Bill WANGARD**, Kildeer, IL (US); **Darren McCarthy**, Sherwood, OR (US); **William KARDINE**, Sterling, VA (US)

(21) Appl. No.: **15/607,988**

(22) Filed: **May 30, 2017**

Publication Classification

(51) **Int. Cl.**

H04B 17/309	(2006.01)
H04B 17/318	(2006.01)
H04W 24/08	(2006.01)

(52) **U.S. Cl.**

CPC ***H04B 17/309*** (2015.01); *H04W 28/048* (2013.01); ***H04W 24/08*** (2013.01); ***H04B 17/318*** (2015.01)

(57) **ABSTRACT**

A system for over the air analyzing is provided. The system comprises an analyzing unit, an antenna, and a load switch. The load switch is used for connecting a reference load. In addition to this, the load switch is integrated in the antenna, or a first signal path between the antenna and the load switch is shorter than a second signal path between the load switch and the analyzing unit.

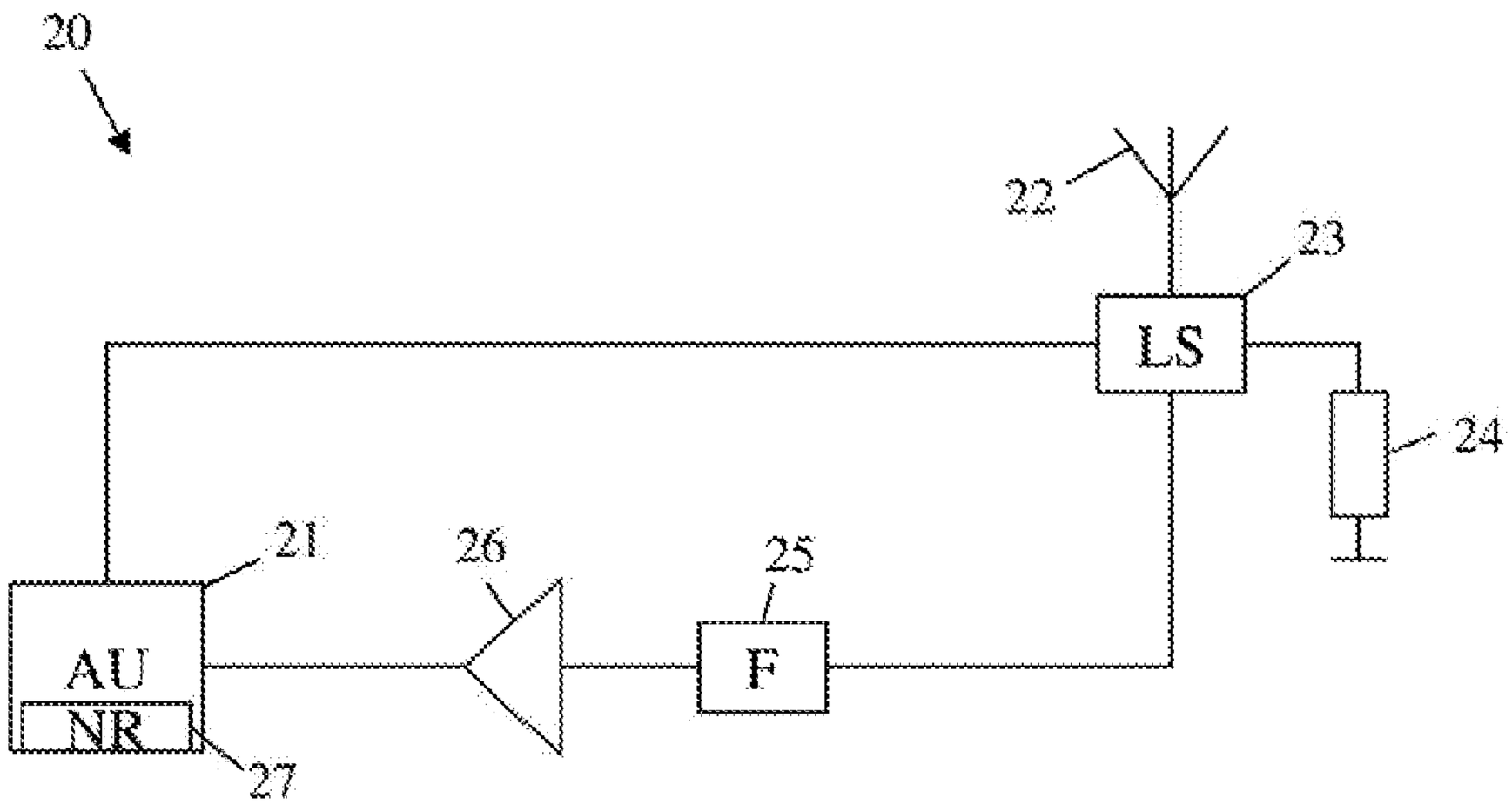

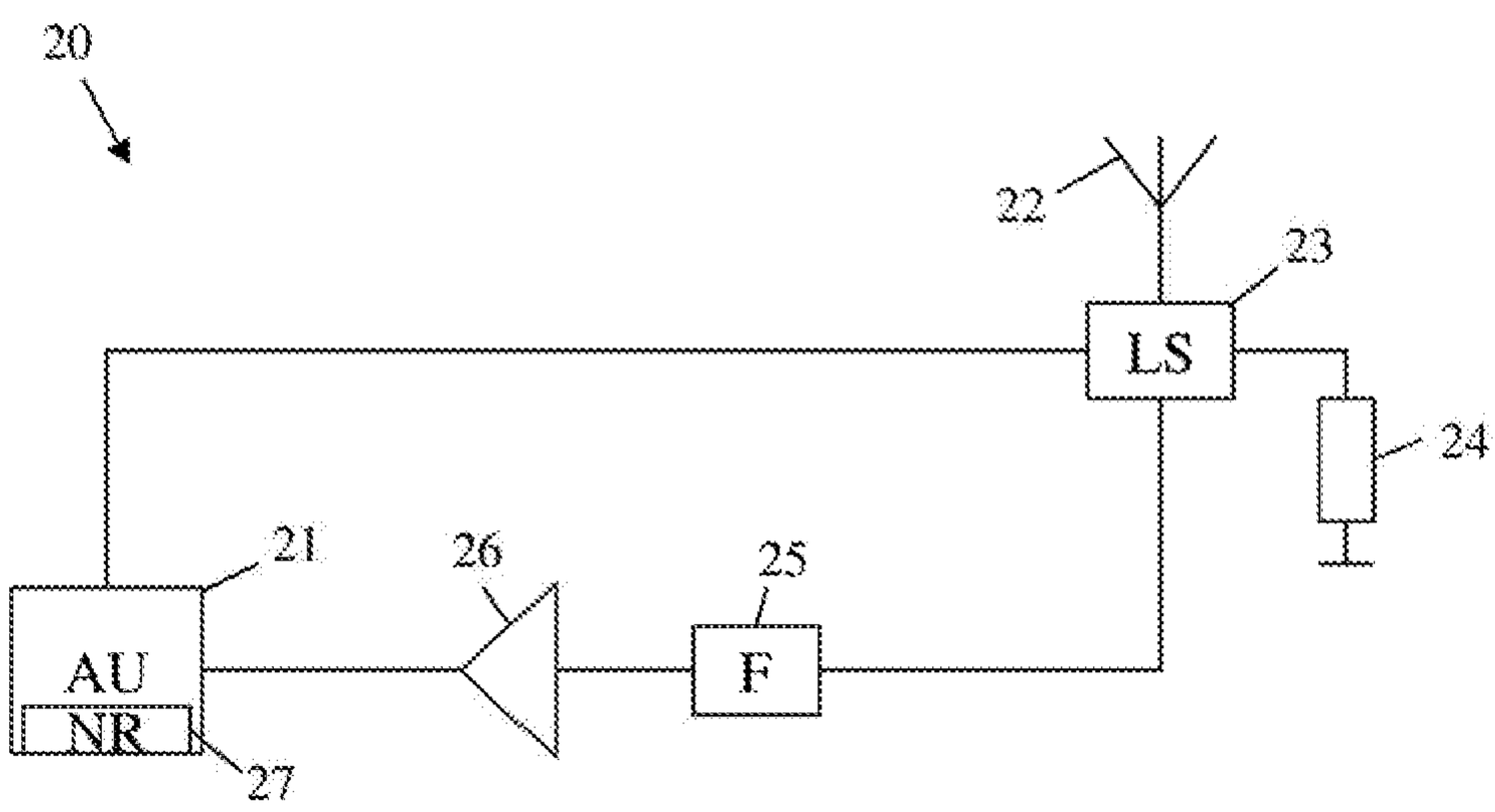

Fig. 1

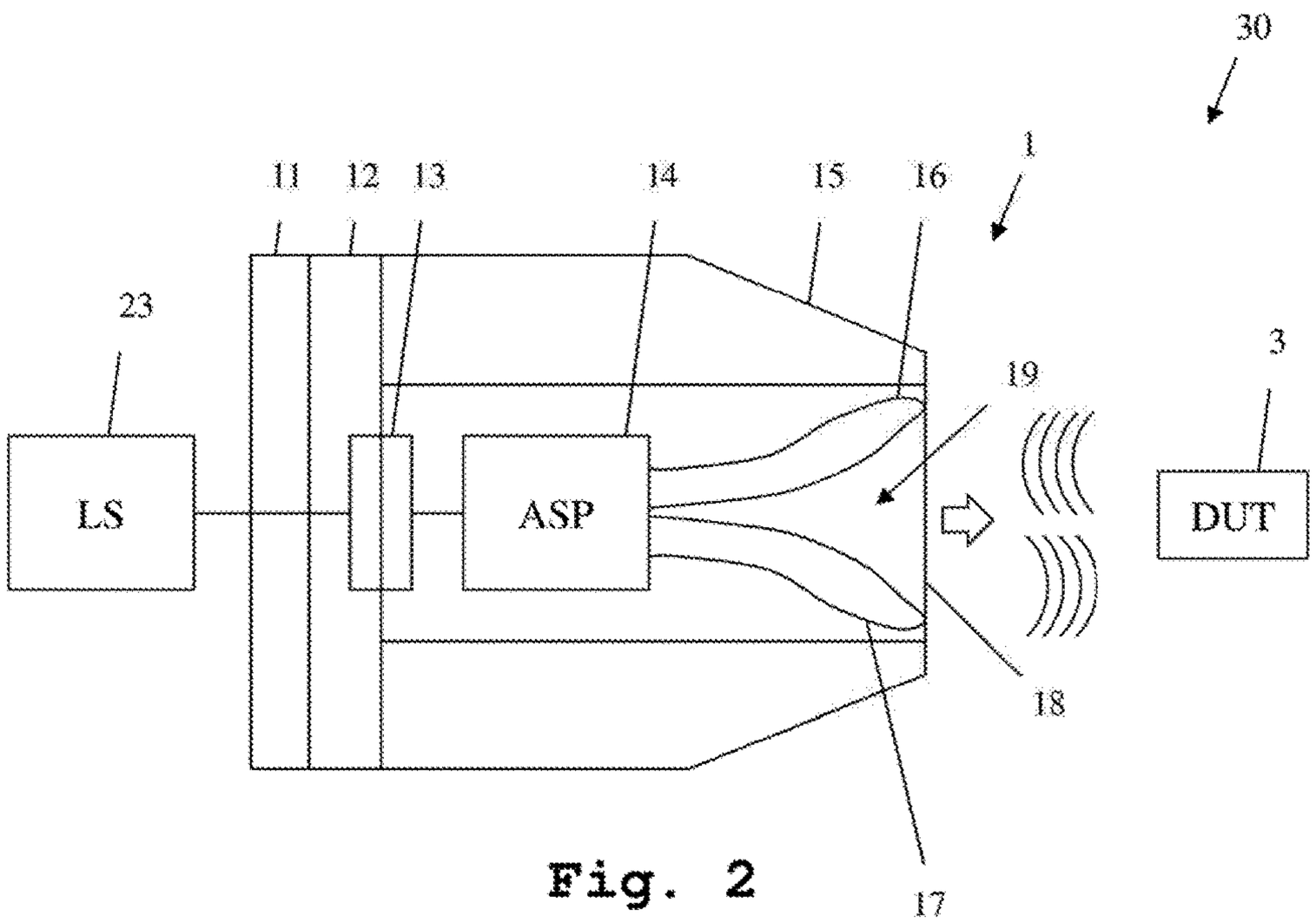
30
1
11
12
13
14
15
16
23
LS
ASP
19
3
DUT
18
17

Fig. 2

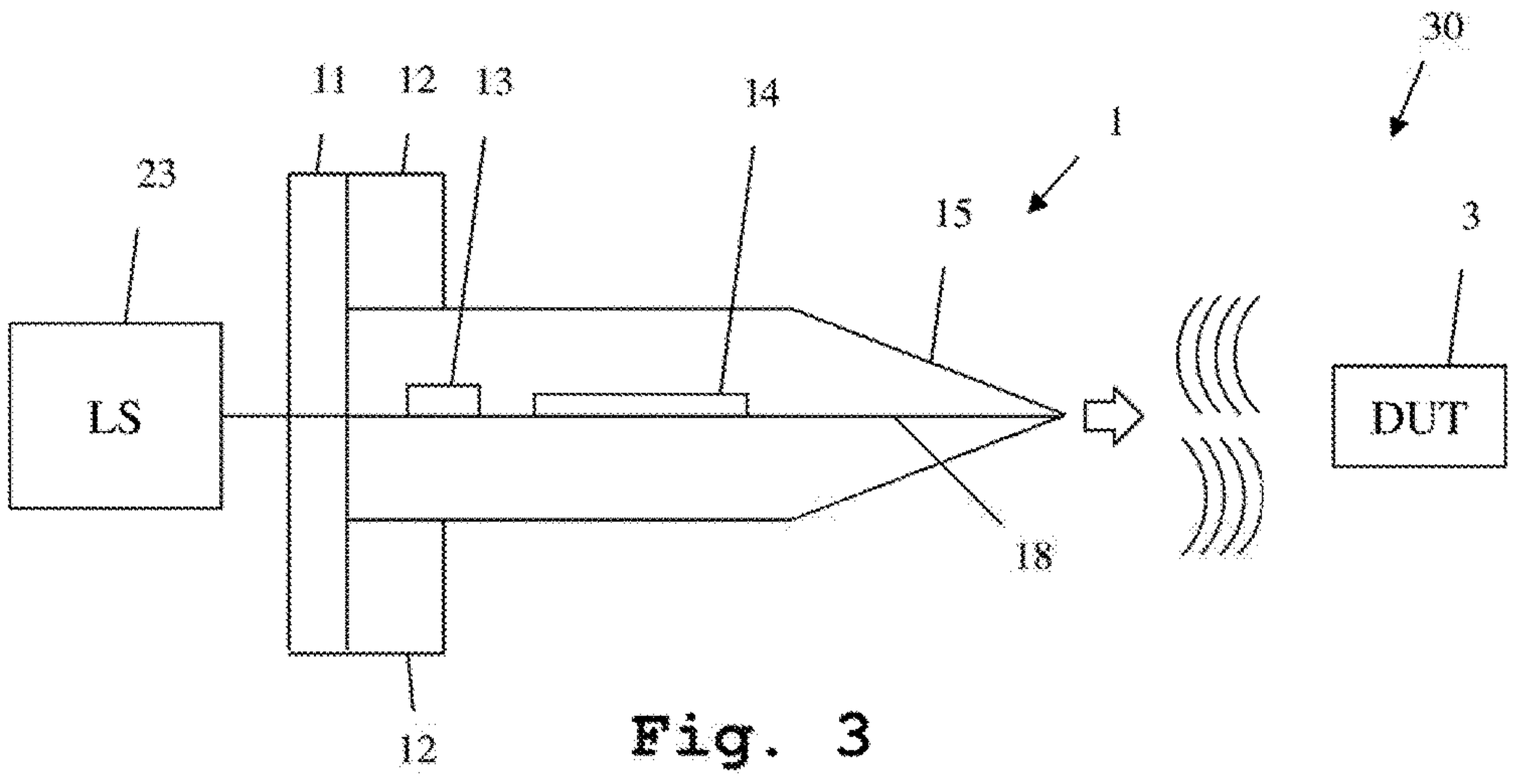
30
1
11
12
13
14
15
23
3
LS
DUT
18
12

Fig. 3

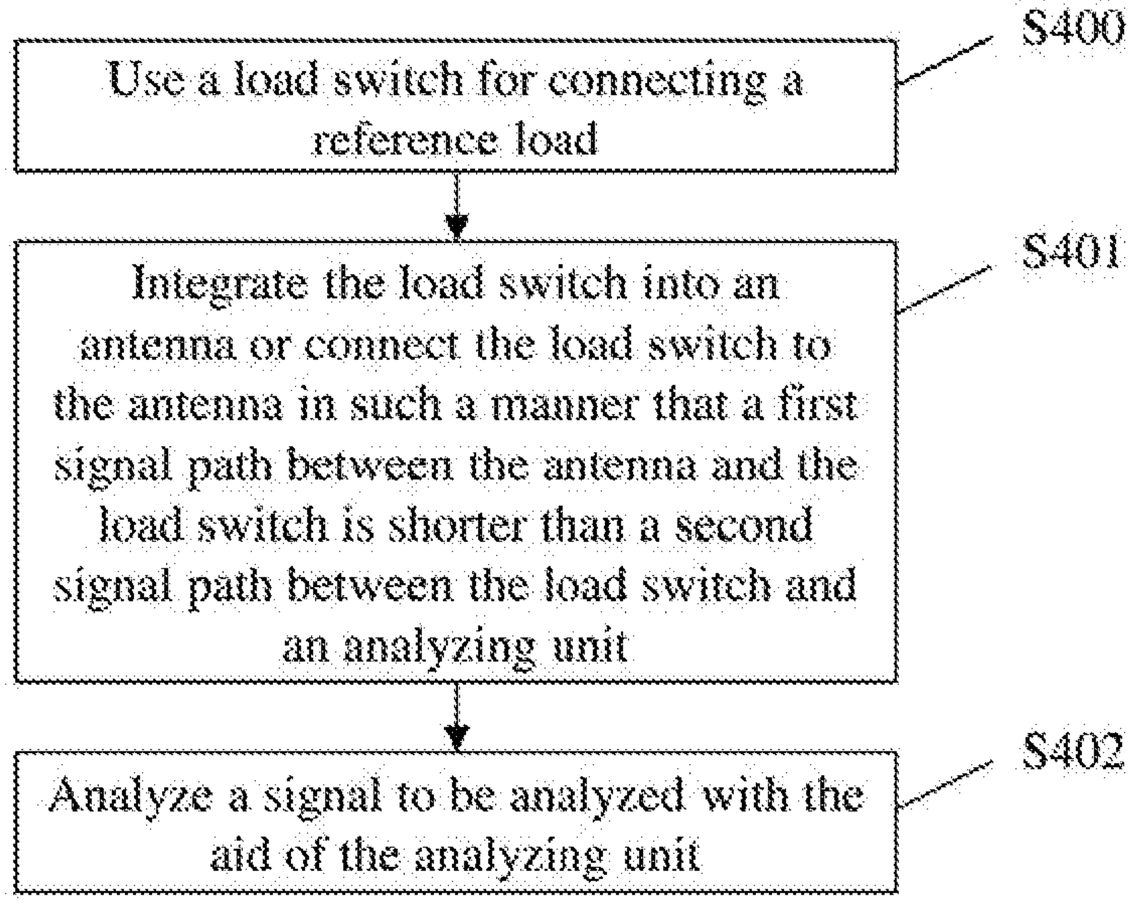
S400
Use a load switch for connecting a reference load
S401
Integrate the load switch into an antenna or connect the load switch to the antenna in such a manner that a first signal path between the antenna and the load switch is shorter than a second signal path between the load switch and an analyzing unit
S402
Analyze a signal to be analyzed with the aid of the analyzing unit

Fig. 4

SYSTEM AND METHOD FOR OVER THE AIR ANALYZING

TECHNICAL FIELD

[0001] The invention relates to a system and a method for over the air analyzing, more specifically, a system and a method for over the air analyzing with the aid of a load switch and a reference load connectable thereto.

BACKGROUND

[0002] Generally, in times of an increasing number of applications employing wireless technologies, there is a growing need of a system and a method for over the air analyzing in a most efficient and accurate manner in order to allow for a highly performant and low-cost test equipment for testing the correct functionality of said applications.

[0003] U.S. Pat. No. 6,144,692 relates to over the air analyzing in the context of testing antennas. Disadvantageously, a spectrum analyzer is connected to an antenna via a receiver and a demodulator without using any reference load, which makes the respective measurements and tests because of a generally existing noise floor caused by each component, which is not reduced due to the lacking reference load.

[0004] Accordingly, there is a need for a system and a method for over the air analyzing in a more efficient and accurate manner, such as with the aid of a load switch and a reference load connectable thereto.

SOME EXAMPLE EMBODIMENTS

[0005] Embodiments of the present invention advantageously address the foregoing requirements and needs, as well as others, by providing a system and a method for over the air analyzing in a more efficient and accurate manner, such as with the aid of a load switch and a reference load connectable thereto.

[0006] According to a first aspect of the invention, a system for over the air analyzing is provided. The system comprises an analyzing unit, an antenna, and a load switch. The load switch is used for connecting a reference load. In addition to this, the load switch is integrated in the antenna, or a first signal path between the antenna and the load switch is shorter than a second signal path between the load switch and the analyzing unit. Advantageously, not only a noise floor caused by the analyzing unit, but a noise floor of the entire system can be reduced.

[0007] According to an example implementation form of the first aspect, the load switch is controllable by the analyzing unit. Advantageously, the reference load can be connected, if required.

[0008] According to a further example implementation form of the first aspect, the first signal path comprises at least one first auxiliary measurement device.

[0009] According to a further example implementation form of the first aspect, the at least one first auxiliary measurement device comprises cabling or a filter or an amplifier or any combination thereof. Advantageously, not only noise associated with the antenna and the analyzing unit can be measured and subtracted in order to minimize a noise floor of the system, but also noise associated with cabling, filtering, and amplifying.

[0010] According to a further example implementation form of the first aspect, the second signal path comprises at least one second auxiliary measurement device.

[0011] According to a further example implementation form of the first aspect, the at least one second auxiliary measurement device comprises cabling or a filter or an amplifier or a load, especially a resistive load, or any combination thereof. Advantageously, not only noise associated with the antenna and the analyzing unit can be measured and subtracted in order to minimize a noise floor of the system, but also noise associated with cabling, filtering, amplifying, and a load, especially a resistive load.

[0012] According to a further example implementation form of the first aspect, the analyzing unit comprises a noise reduction unit for reducing noise of the signal to be analyzed. Advantageously, noise of the signal to be measured is especially reduced by subtracting a measured noise floor of the system.

[0013] According to a further example implementation form of the first aspect, the noise reduction unit derives noise reduction values from a first measured spectrum of the signal to be analyzed, if the reference load is connected, and from a second measured spectrum of the signal to be analyzed, if the reference load is disconnected.

[0014] According to a further example implementation form of the first aspect, the analyzing unit is a spectrum analyzing unit which analyzes a signal to be analyzed with respect to its spectrum with the aid of the reference load being connected or without the reference load in the case that the reference load is disconnected.

[0015] According to a second aspect of the invention, a method for over the air analyzing is provided. The method comprises the steps of using a load switch for connecting a reference load, integrating the load switch into an antenna or connecting the load switch to the antenna in such a manner that a first signal path between the antenna and the load switch is shorter than a second signal path between the load switch and an analyzing unit, and analyzing a signal to be analyzed with the aid of the analyzing unit. Advantageously, not only a noise floor caused by the analyzing unit, but a noise floor of the entire system can be reduced.

[0016] According to an example implementation form of the second aspect, the method further comprises the step of controlling the load switch with the aid of the analyzing unit. Advantageously, the reference load can be connected, if required.

[0017] According to a further example implementation form of the second aspect, the first signal path comprises at least one first auxiliary measurement device.

[0018] According to a further example implementation form of the second aspect, the at least one first auxiliary measurement device comprises cabling or a filter or an amplifier or a load, especially a resistive load, or any combination thereof. Advantageously, not only noise associated with the antenna and the analyzing unit can be measured and subtracted in order to minimize a noise floor, but also noise associated with cabling, filtering, amplifying, and a load, especially a resistive load.

[0019] According to a further example implementation form of the second aspect, the second signal path comprises at least one second auxiliary measurement device.

[0020] According to a further example implementation form of the second aspect, the at least one second auxiliary measurement device comprises cabling or a filter or an

amplifier or a load, especially a resistive load, or any combination thereof. Advantageously, not only noise associated with the antenna and the analyzing unit can be measured and subtracted in order to minimize a noise floor, but also noise associated with cabling, filtering, amplifying, and a load, especially a resistive load.

[0021] According to a further example implementation form of the second aspect, the method further comprises the step of reducing noise of the signal to be analyzed with the aid of a noise reduction unit comprised by the analyzing unit. Advantageously, noise of the signal to be measured is especially reduced by subtracting a measured noise floor.

[0022] According to a further example implementation form of the second aspect, the method further comprises the step of deriving noise reduction values with the aid of the noise reduction unit from a first measured spectrum of the signal to be analyzed, if the reference load is connected, and from a second measured spectrum of the signal to be analyzed, if the reference load is disconnected.

[0023] According to a further example implementation form of the second aspect, the signal to be analyzed is analyzed with respect to its spectrum with the aid of the analyzing unit, if the reference load is connected, or without the reference load in the case that the reference load is disconnected.

[0024] Still other aspects, features, and advantages of the present invention are readily apparent from the following detailed description, simply by illustrating a number of particular embodiments and implementations, including the best mode contemplated for carrying out the present invention. The present invention is also capable of other and different embodiments, and its several details can be modified in various obvious respects, all without departing from the spirit and scope of the present invention. Accordingly, the drawings and description are to be regarded as illustrative in nature, and not as restrictive.

BRIEF DESCRIPTION OF THE DRAWINGS

[0025] Embodiments of the present invention are illustrated by way of example, and not by way of limitation, in the figures of the accompanying drawings, in which like reference numerals refer to similar elements, and in which:

[0026] FIG. **1** shows a block diagram of an example system for over the air analyzing, in accordance with example embodiments of the present invention;

[0027] FIG. **2** shows an example over the air measurement module, in the form of an antenna shown in a top-down view, in accordance with example embodiments of the present invention;

[0028] FIG. **3** shows a side view of the antenna of FIG. **2**; and

[0029] FIG. **4** shows a flow chart of an example method for over the air analyzing, in accordance with example embodiments of the present invention.

DETAILED DESCRIPTION

[0030] A system and a method for over the air analyzing in a more efficient and accurate manner, such as with the aid of a load switch and a reference load connectable thereto, are described. In the following description, for the purposes of explanation, numerous specific details are set forth in order to provide a thorough understanding of the invention. It is apparent, however, that the invention may be practiced without these specific details or with an equivalent arrangement. In other instances, well-known structures and devices are shown in block diagram form in order to avoid unnecessarily obscuring the invention.

[0031] FIG. **1** illustrates an example embodiment of a system **20** for over the air analyzing, in accordance with example embodiments of the present invention. The system **20** comprises an analyzing unit **21**, an antenna **22**, a load switch **23** connected to a reference load **24**, a filtering unit **25**, and an amplifier especially in the form of a preamplifier **26**.

[0032] By way of example, with the aid of the direction of the amplifier **26**, the analyzing unit **21** generally analyzes a signal received with the aid of the antenna **22**. In this context, transmitting a signal generated by the analyzing unit **21** with the aid of the antenna **22** would be also possible.

[0033] As depicted in the example system of FIG. **1**, the signal to be analyzed, with the aid of the analyzing unit **21**, is received with the aid of the antenna **22**. Afterwards, the received signal to be analyzed is passed the load switch **23**. The load switch **23** is connected to the antenna **22** in such a manner that the signal path between the load switch **23** and the antenna **22** is as short as possible. Alternatively, the load switch **23** may be integrated in the antenna **22**.

[0034] Further, the load switch **23** passes the signal to be analyzed via at least one auxiliary measurement device such as filters, which are illustrated in the form of the filtering unit **25**, or amplifiers, which are illustrated in the form of the preamplifier **26**, or cabling, or any combination thereof.

[0035] In addition to this, the load switch **23** is also connected to the analyzing unit **21** in such a manner that the load switch **23** is controllable by the analyzing unit **21** via said connection.

[0036] Moreover, with respect to the above-mentioned reference load **24** connected to the load switch **23**, the load switch **23** may be a complex impedance or a purely ohmic resistance. The value of the impedance or the resistance may be between 20 and 80 ohm, such as 50 ohm.

[0037] Further, as depicted in the example system of FIG. **1** the analyzing unit **21** comprises a noise reduction unit **27** for reducing noise of the signal to be analyzed. According to example embodiments, the noise reduction unit may comprises a processor or other electronic circuitry that is configured to reduce the noise of the signal to be analyzed. In this context, the noise reduction unit **27** derives noise reduction values from a first measured spectrum of the signal to be analyzed, if the reference load **24** is connected, and from a second measured spectrum of the signal to be analyzed, if the reference load **24** is disconnected.

[0038] Accordingly, a first and a second spectrum may be measured with the aid of the analyzing unit **21**. According to example embodiments, the analyzing unit **21** may comprise is a spectrum analyzer or a processor configured to analyze signals, where the analyzing unit is configured to analyze the signal to be analyzed with respect to its spectrum with the aid of the reference load **24** being connected or without the reference load **24** in the case that the reference load **24** is disconnected.

[0039] FIG. **2** shows an example over the air measurement module, in the form of an antenna shown in a top-down view, in accordance with example embodiments of the present invention.

[0040] According to such example embodiments, the over the air measurement module **1** comprises a housing **15**

which contains a substrate **18**, such as a printed circuit board. On the substrate **18**, two antenna elements **16**, **17** forming a tapered slot line antenna **19**, are arranged. The antenna **19** is connected to an analog signal processor **14** which is also arranged on the substrate **18**. The analog signal processor is connected to a connector **13** which serves as an interface **13**. Connectable to the interface **13** is the load switch **23**, which is not part of the over the air measurement module **1**. The antenna **19** has a main radiation direction towards the right edge of the substrate **18**, indicated by an arrow in the figures. A device under test **3** is suitably arranged in this direction.

[0041] By way of example, in order to minimize reflections from the over the air measurement module **1**, the housing **15** is tapered towards the main radiation direction of the antenna **19**. This tapering reduces the effective surface area, which can produce reflections. In order to further reduce such reflections, the housing **15** can be fabricated from an electromagnetic radiation absorbing material. It can also be covered with such a material or can be coated with an absorptive paint. The housing **15** further comprises a back plate **11**, which is covered with absorptive material **12** in order to further reduce reflections.

[0042] In this context, even though the example embodiment of the over the air measurement module **1** according to FIG. **2** provides a main radiation direction, the embodiments of the invention may further relate to employing an antenna providing omnidirectional radiation characteristics.

[0043] By way of further example, the over the air measurement module **1** may be suitable for two types of measurements. In a first type of measurement, a first measuring signal emitted from the device under test **3** is received by the antenna **19** and handed to the analog signal processor **14**. The analog signal processor **14** reduces the frequency of the first measuring signal resulting in a frequency reduced first measuring signal. This is for example done by down-converting the first measuring signal using a mixer. Additionally, the analog signal processor in this case can comprise one or more filters for filtering the first measuring signal or the frequency reduced first measuring signal, a power sensor, which can be used for directly measuring a power of the frequency reduced first measuring signal, an amplifier for amplifying the first measuring signal or the first frequency reduced measuring signal, and a radio frequency switch for switching between the previously described measuring option and the measuring option described in the following. The processed frequency reduced measuring signal is then handed on to the connector **13**, which passes on the signal to for example the external load switch **23** passing directly or indirectly on the said signal to the analyzing unit **21** for further processing the frequency reduced measuring signal. In this context, whereas "directly passing the signal" means passing the signal without auxiliary measurement devices in the respective signal path, "indirectly passing the signal" means passing the signal with the aid of at least one auxiliary measurement device such as filters or amplifiers in the respective signal path.

[0044] Alternatively, the over the air measurement module can be used for another type of measurement. In this case, the connector **13** directly or indirectly receives a frequency reduced second measuring signal from the analyzing unit **21** via the load switch **23**. In this context, whereas "directly receiving the signal" means receiving the signal without auxiliary measurement devices in the respective signal path, "indirectly receiving the signal" means receiving the signal with the aid of at least one auxiliary measurement device such as filters or amplifiers in the respective signal path. Afterwards, said signal is handed on to the analog signal processor **14**. The analog signal processor **14** increases the frequency of the frequency reduced second measuring signal resulting in a second measuring signal. This is for example done by mixing the frequency reduced second measuring signal with a further local oscillator signal. The second measuring signal is then transmitted by the antenna **19** to the device under test **3**. Also, in this case, the analog signal processor can comprise additional components. The analog signal processor can comprise a filter, for filtering the second measuring signal and/or the second frequency reduced measuring signal. Also, the analog signal processor can comprise an amplifier for amplifying the second measuring signal and/or the second frequency reduced measuring signal. Moreover, the analog signal processor can comprise a radio frequency switch, adapted to switch between different operating modes of the over the air measurement module.

[0045] In FIG. **3**, the over the air measurement module of FIG. **2** is shown in a cut view from the side. Here it can be seen that the analog signal processor **14** and the connector **13** are arranged on the substrate **18**. Moreover, the tapering of the housing **15** and the arrangement of the absorbers **12** can be seen.

[0046] FIG. **4** shows a flow chart of an example method for over the air analyzing, in accordance with example embodiments of the present invention. In a first step S**400**, a load switch is used for connecting a reference load. In a second step S**401**, the load switch is integrated into an antenna or the load switch is connected to the antenna in such a manner that a first signal path between the antenna and the load switch is shorter than a second signal path between the load switch and an analyzing unit. Then, in a third step, a signal to be analyzed is analyzed with the aid of the analyzing unit.

[0047] While various embodiments of the present invention have been described above, it should be understood that they have been presented by way of example only, and not limitation. Numerous changes to the disclosed embodiments can be made in accordance with the disclosure herein without departing from the spirit or scope of the invention. Thus, the breadth and scope of the present invention should not be limited by any of the above described embodiments. Rather, the scope of the invention should be defined in accordance with the following claims and their equivalents.

[0048] Although the invention has been illustrated and described with respect to one or more implementations, equivalent alterations and modifications will occur to others skilled in the art upon the reading and understanding of this specification and the annexed drawings. In addition, while a particular feature of the invention may have been disclosed with respect to only one of several implementations, such feature may be combined with one or more other features of the other implementations as may be desired and advantageous for any given or particular application.

1. A system for over the air analyzing, the system comprising:

a signal analyzer;

an antenna;

a reference load; and

a load switch configured to connect the reference load to the signal analyzer; and

wherein the load switch is either integrated in the antenna, or the load switch is connected to the antenna via a first signal path and to the signal analyzer via a second signal path, wherein the first signal path is shorter than the second signal path,

wherein the signal analyzer comprises a noise reduction device configured to reduce noise of a signal to be analyzed, and

wherein the noise reduction device is configured to derive noise reduction values from a first measured spectrum of the signal to be analyzed when the reference load is connected, and from a second measured spectrum of the signal to be analyzed when the reference load is not connected.

2. The system according to claim **1**, wherein the signal analyzer is configured to control the load switch.

3. The system according to claim **1**, wherein the first signal path comprises at least one first auxiliary measurement device.

4. The system according to claim **3**, wherein the at least one first auxiliary measurement device comprises one or more of cabling, one or more filters, and one or more amplifiers.

5. The system according to claim **1**, wherein the second signal path comprises at least one second auxiliary measurement device.

6. The system according to claim **5**, wherein the at least one second auxiliary measurement device comprises one or more of cabling, one or more filters, and one or more amplifiers.

7-8. (canceled)

9. The system according to claim **1**, wherein the signal analyzer comprises a spectrum analyzer configured to analyze a signal to be analyzed, with respect to spectrum of the signal to be analyzed, wherein the reference load either is connected or is disconnected.

10. A method for over the air analyzing, the method comprising:

analyzing a signal to be analyzed with the aid of a signal analyzer;

reducing noise of the signal to be analyzed with the aid of a noise reduction device within the signal analyzer; and

deriving noise reduction values, via the noise reduction device, from a first measured spectrum of the signal to be analyzed when the reference load is connected, and from a second measured spectrum of the signal to be analyzed when the reference load is not connected; and

wherein a load switch is employed for connecting a reference load to the signal analyzer, and

wherein the load switch is either integrated in an antenna, or the load switch is connected to the antenna via a first signal path and to the signal analyzer via a second signal path, wherein the first signal path is shorter than the second signal path.

11. The method according to claim **10**, further comprising:

controlling the load switch with the aid of the signal analyzer.

12. The method according to claim **10**, wherein the first signal path comprises at least one first auxiliary measurement device.

13. The method according to claim **12**, wherein the at least one first auxiliary measurement device comprises one or more of cabling, one or more filters, and one or more amplifiers.

14. The method according to claim **10**, wherein the second signal path comprises at least one second auxiliary measurement device.

15. The method according to claim **14**, wherein the at least one second auxiliary measurement device comprises one or more of cabling, one or more filters, and one or more amplifiers.

16-17. (canceled)

18. The method according to claim **10**, wherein the signal to be analyzed is analyzed with respect to spectrum of the signal to be analyzed, wherein the reference load either is connected or is disconnected.

* * * * *