US 20180281663A1

(19) **United States**

(12) **Patent Application Publication**

Burton

(10) **Pub. No.: US 2018/0281663 A1**

(43) **Pub. Date: Oct. 4, 2018**

(54) **HIGH EXTRACTION FORCE BALL SOCKET**

(71) Applicant: **Burton Technologies, LLC**, Ludington, MI (US)

(72) Inventor: **John E. Burton**, Ludington, MI (US)

(73) Assignee: **Burton Technologies, LLC**, Ludington, MI (US)

(21) Appl. No.: **15/996,998**

(22) Filed: **Jun. 4, 2018**

Related U.S. Application Data

(63) Continuation of application No. 14/704,264, filed on May 5, 2015, now Pat. No. 9,987,972, which is a continuation of application No. 13/778,351, filed on Feb. 27, 2013, now Pat. No. 9,140,294.

(60) Provisional application No. 61/607,117, filed on Mar. 6, 2012.

Publication Classification

(51) **Int. Cl.**

B60Q 1/068	(2006.01)
F16C 11/06	(2006.01)
F21S 41/39	(2006.01)

(52) **U.S. Cl.**

CPC ***B60Q 1/068*** (2013.01); *F16C 2208/66* (2013.01); *F16C 2226/74* (2013.01); ***F16C 11/06*** (2013.01); ***F21S 41/39*** (2018.01); *F21V 21/29* (2013.01); *B60Q 2200/32* (2013.01); *Y10T 403/32737* (2015.01); *F16C 2326/01* (2013.01); *Y10T 403/32762* (2015.01)

(57) **ABSTRACT**

A ball socket for connection with a ball stud resists accidental pull-out of the ball stud. The ball socket achieves relatively low insertion force but relatively high pull-out force resistance.

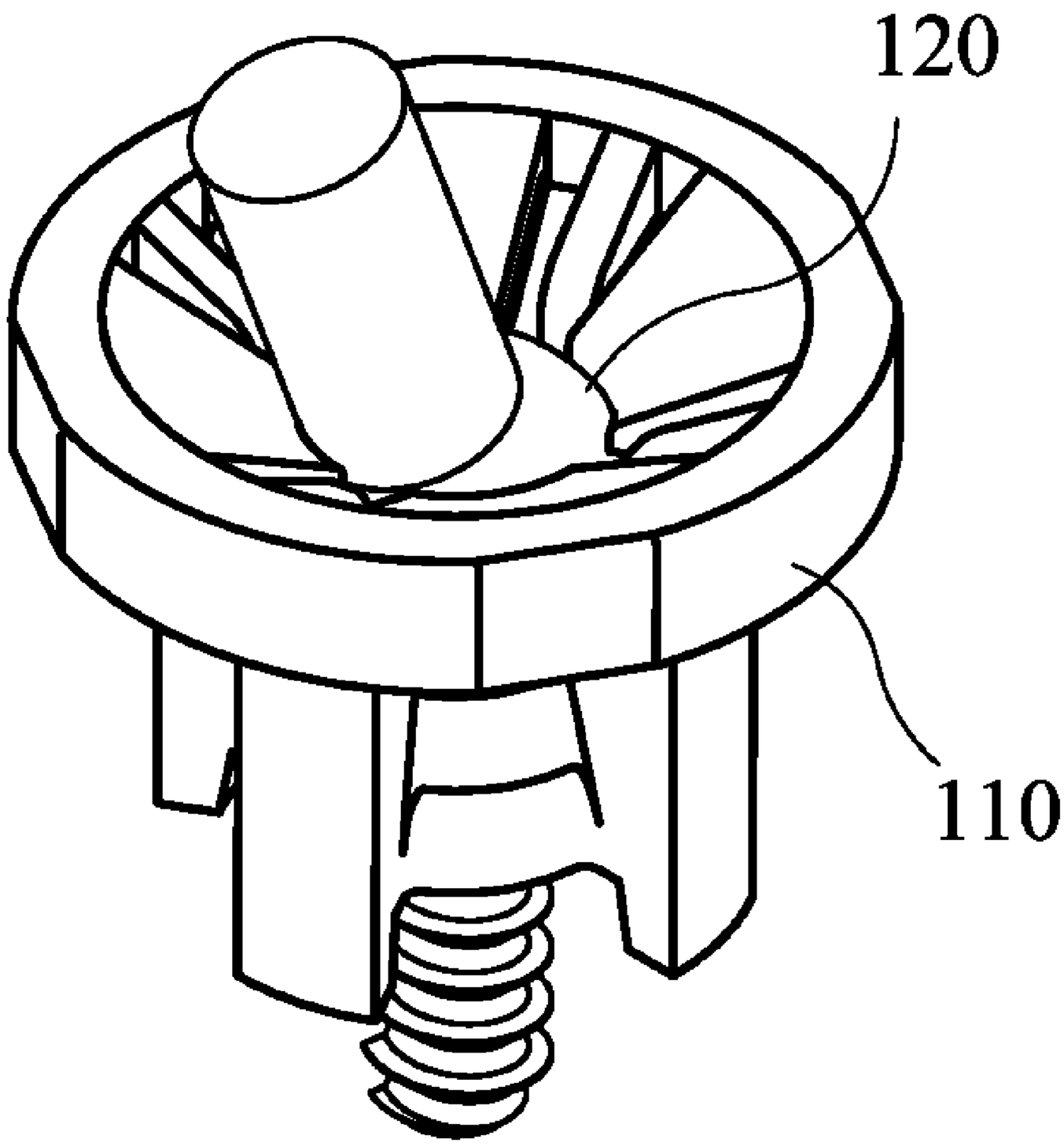

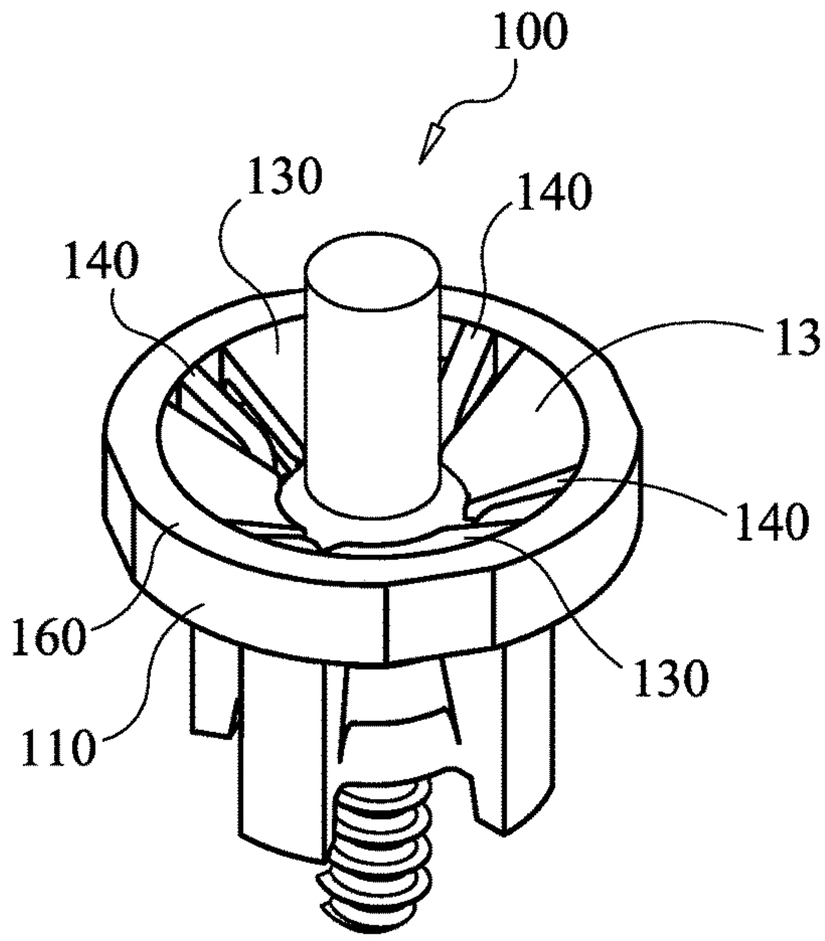

FIG. 1

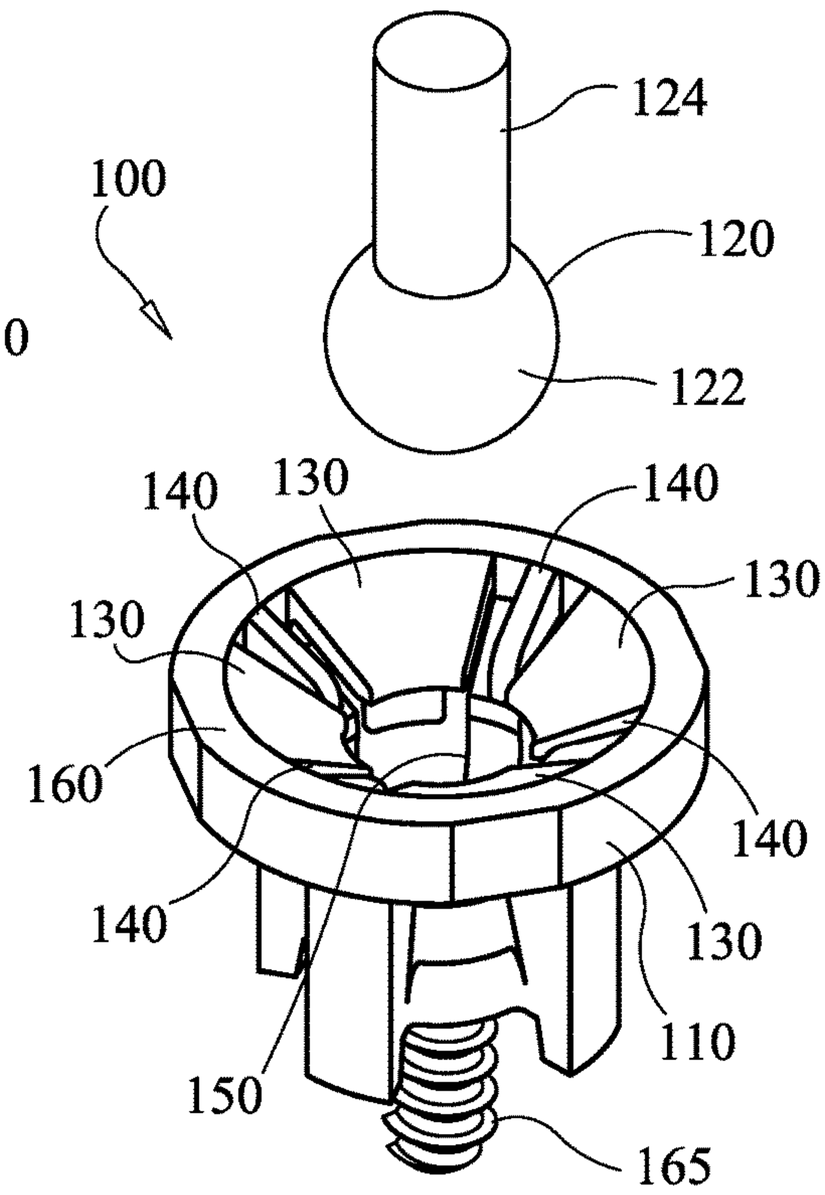

FIG. 2

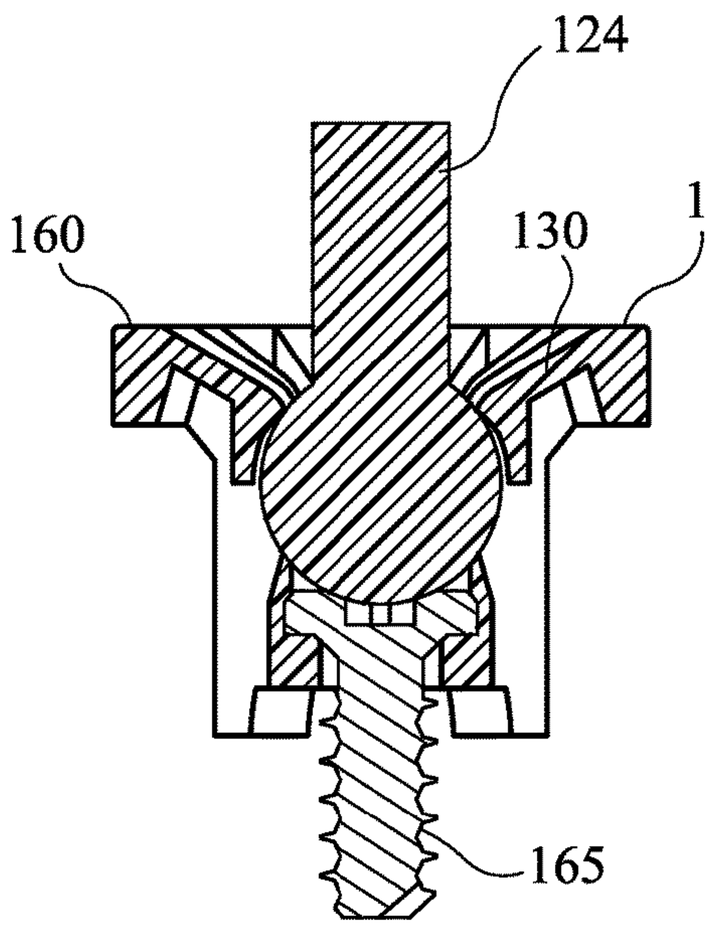

FIG. 3

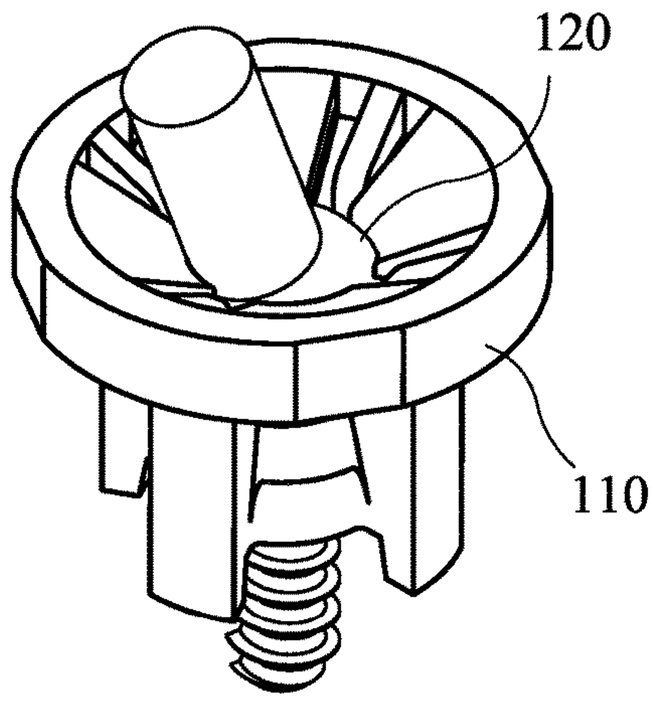

FIG. 4

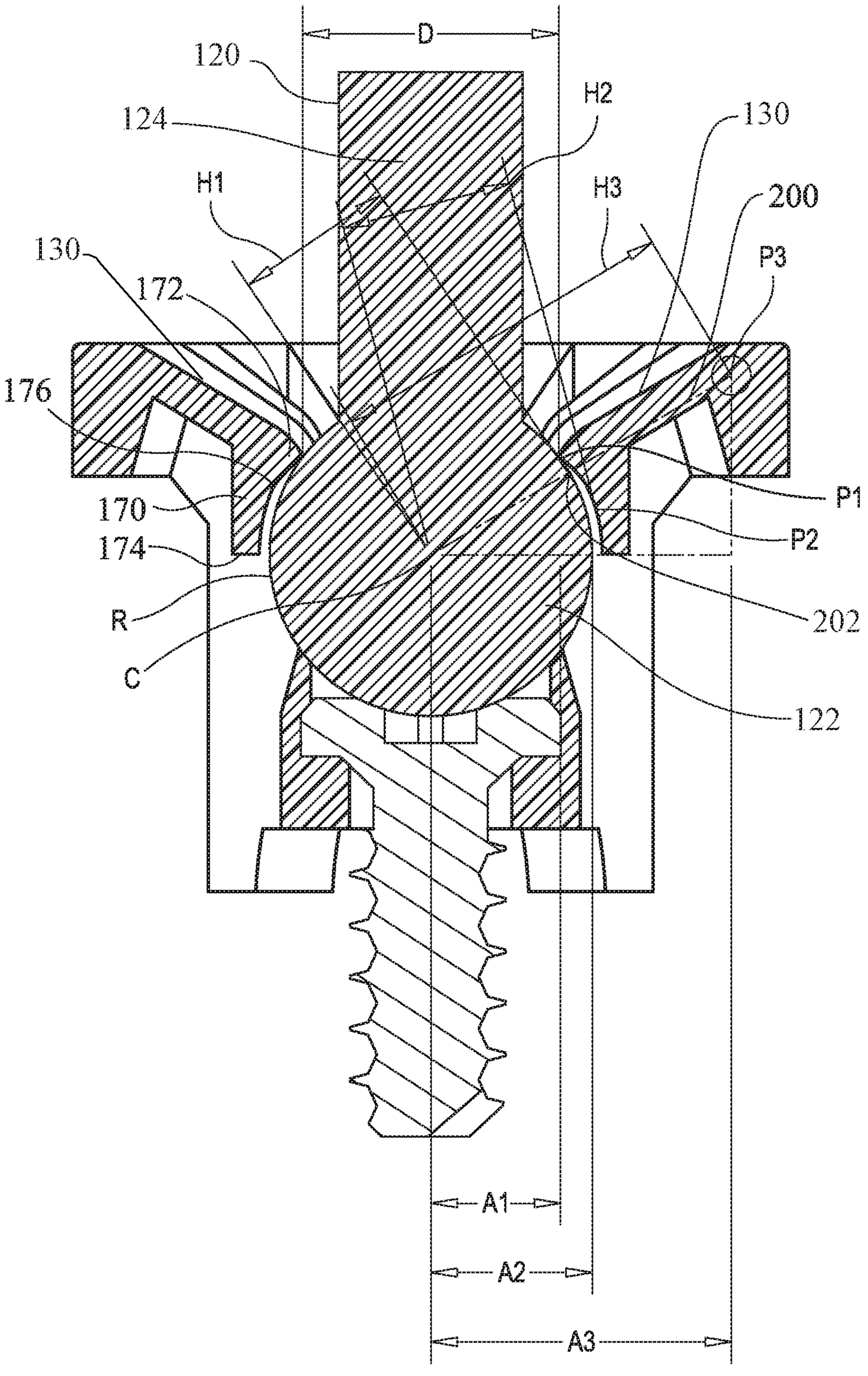
D
120
124
H2
130
H1
H3
200
130
172
P3
176
P1
170
P2
174
202
R
C
122
A1
A2
A3

FIG. 5

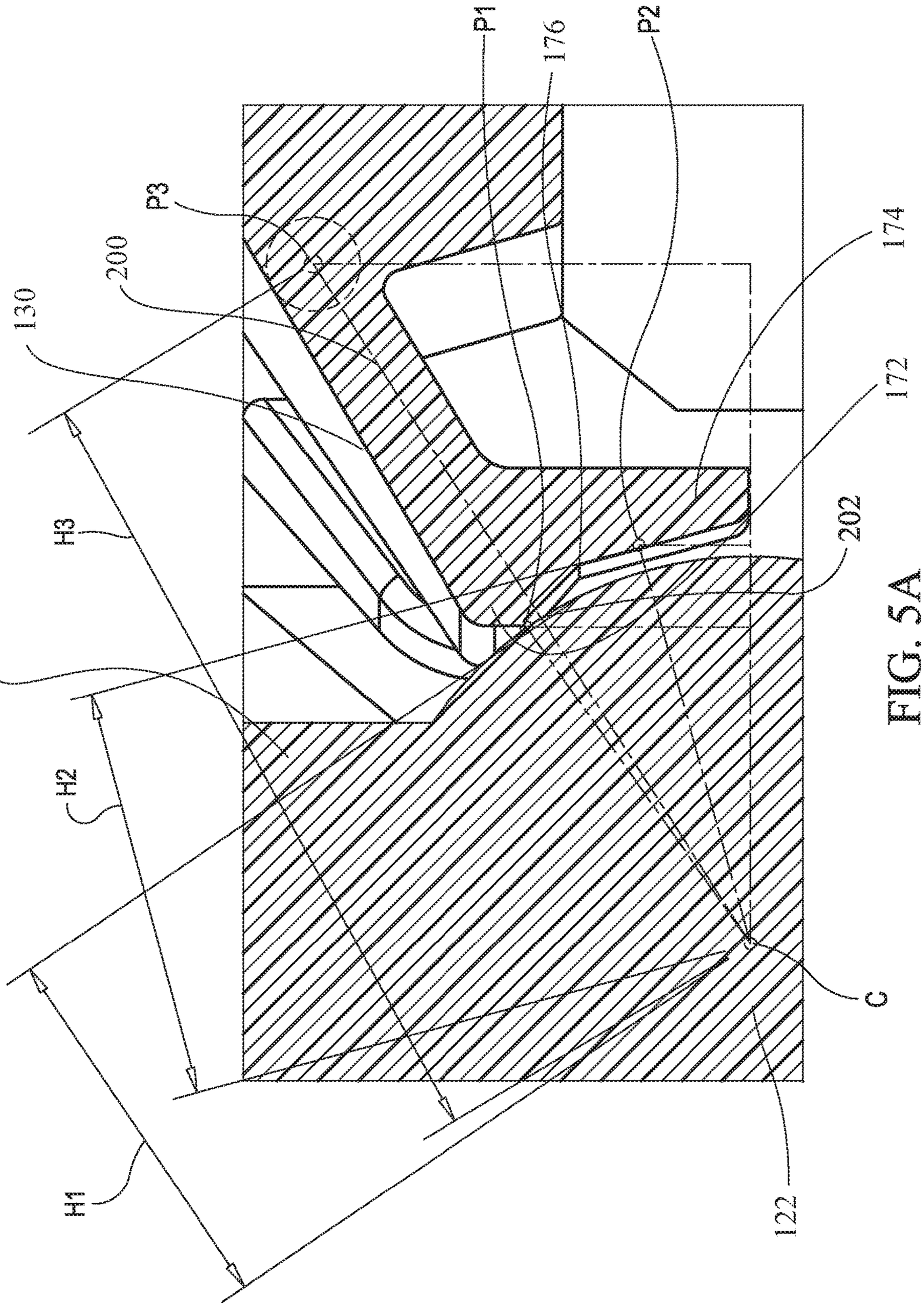

FIG. 5A

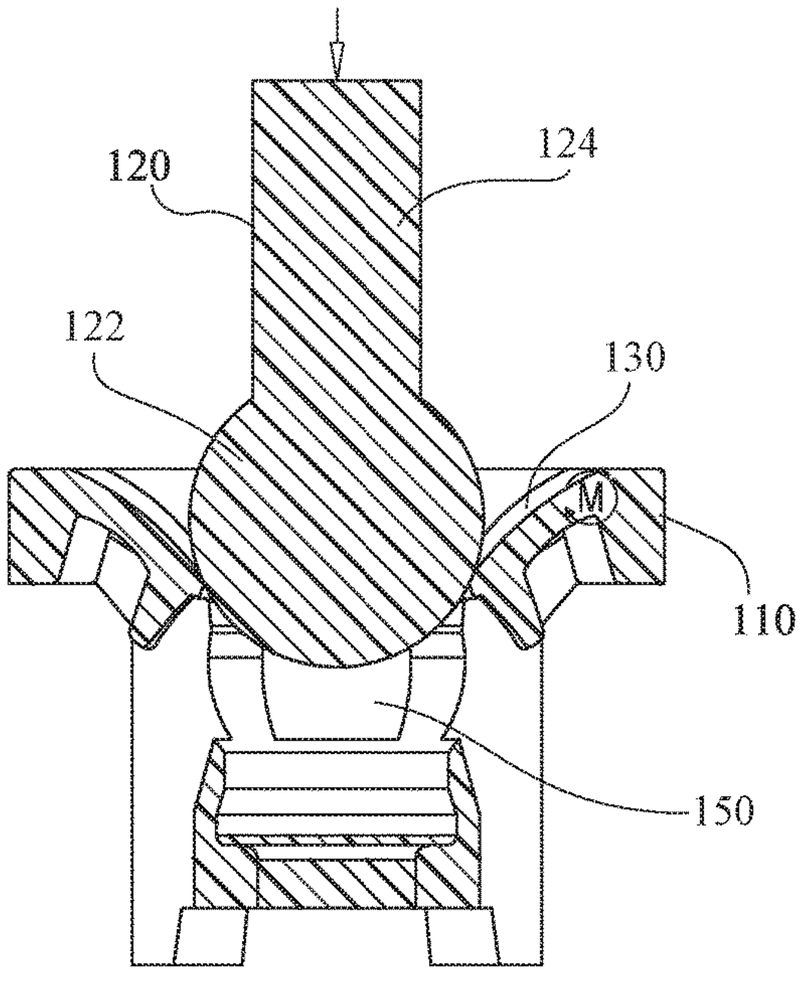

FIG. 6

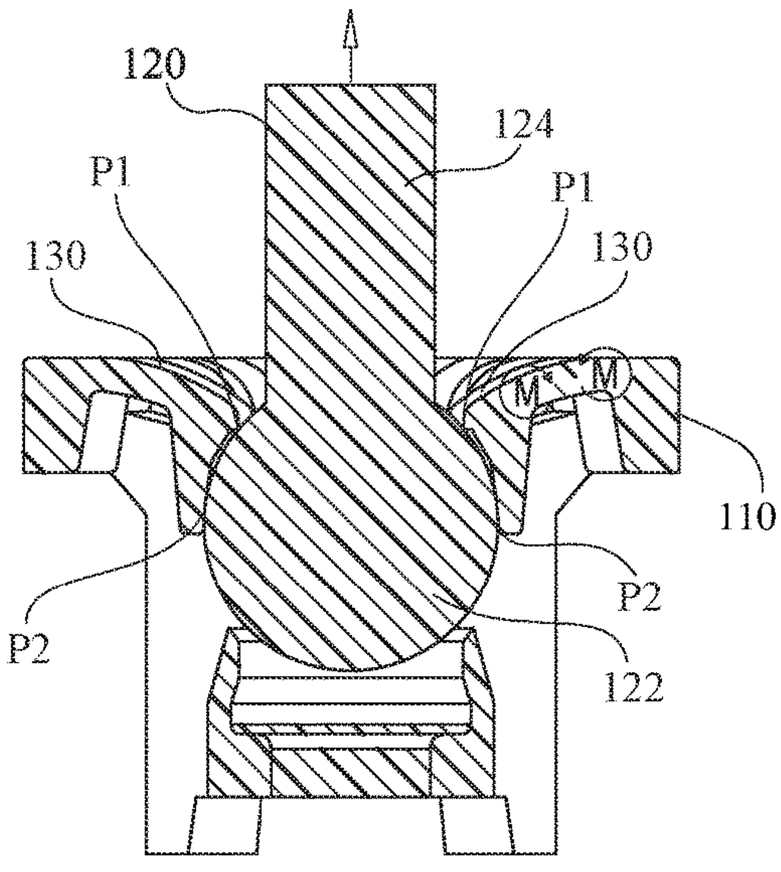

FIG. 7

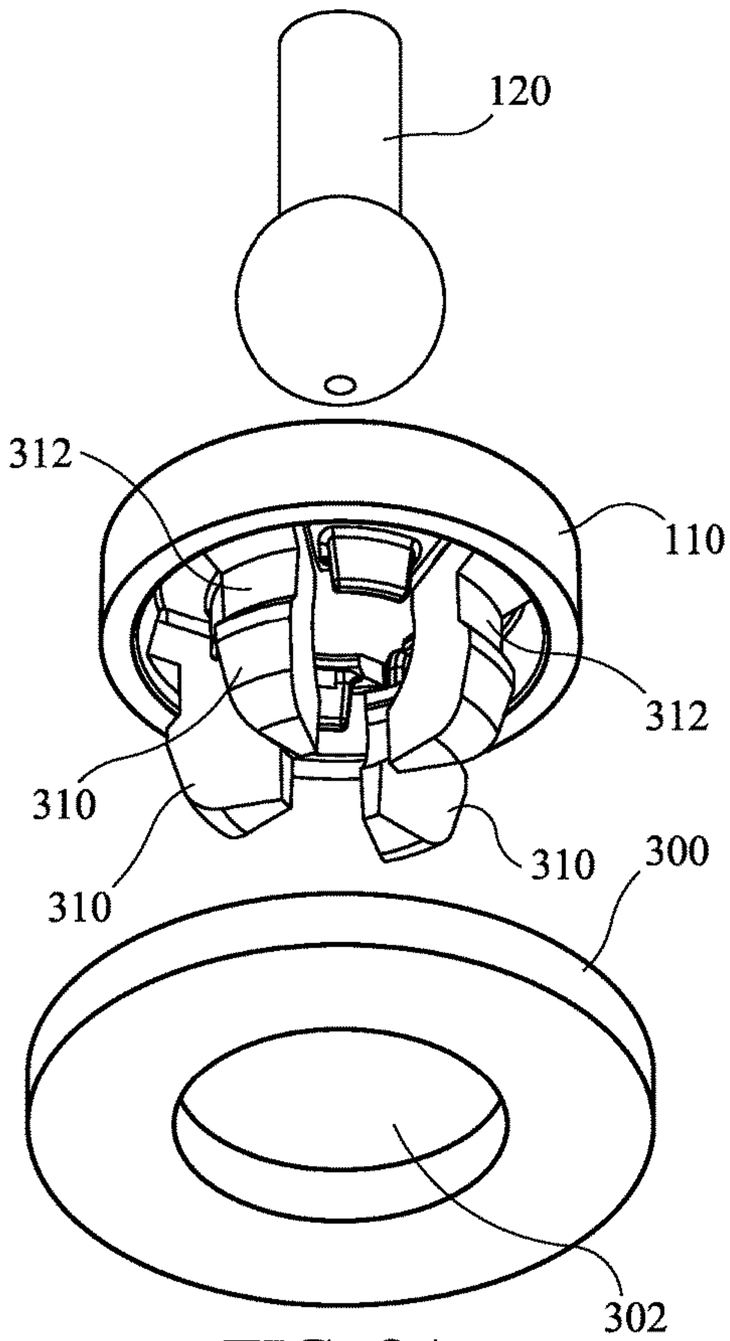

FIG. 8A

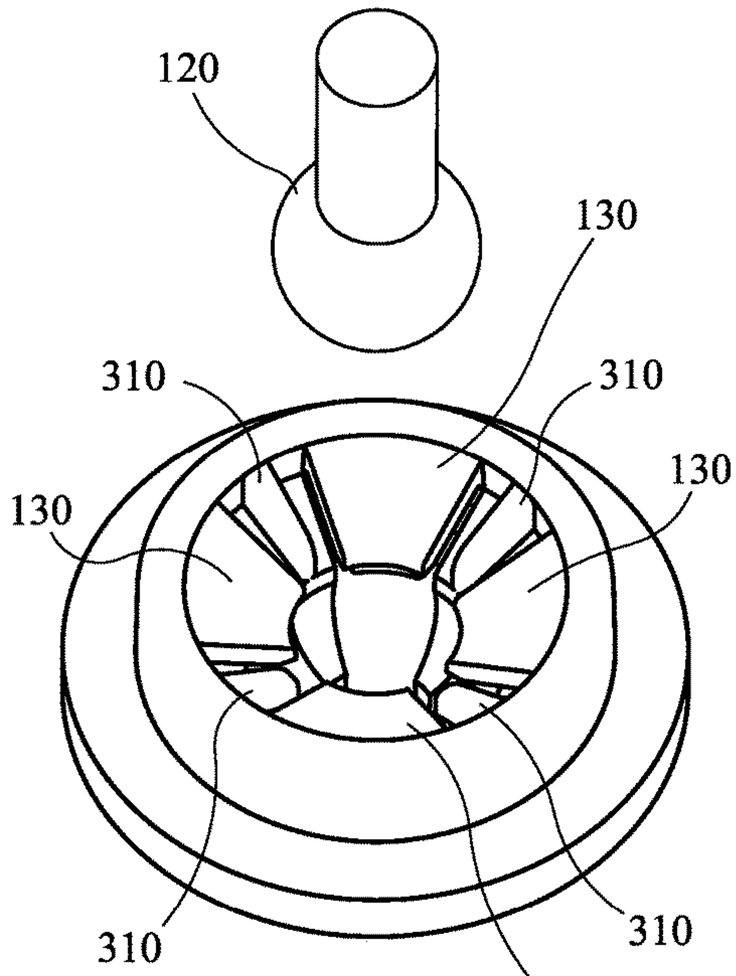

FIG. 8B

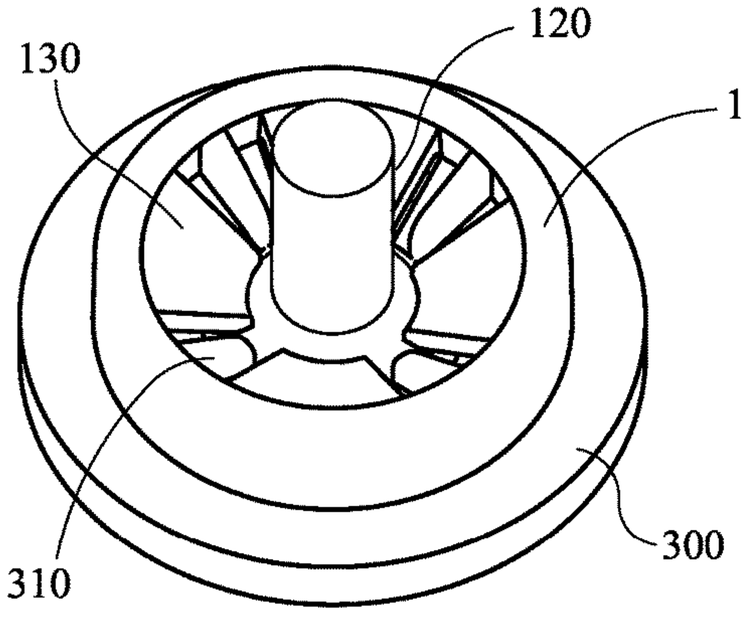

FIG. 8C

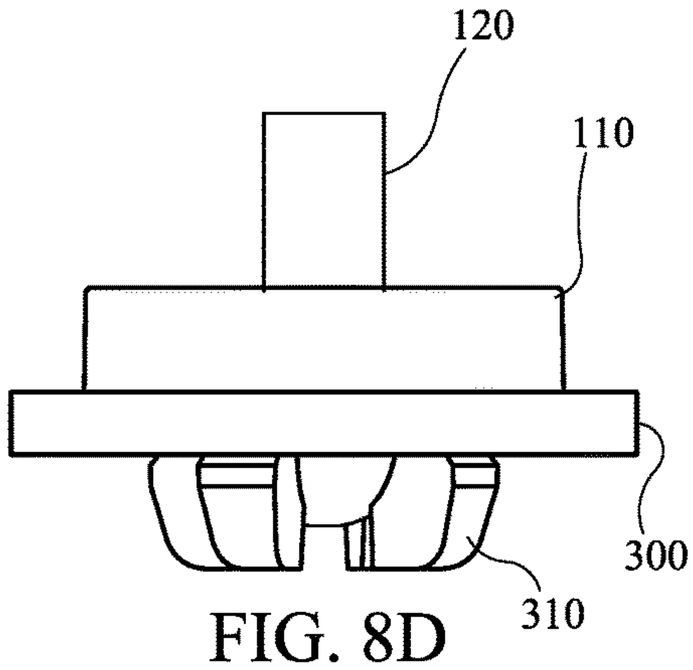

FIG. 8D

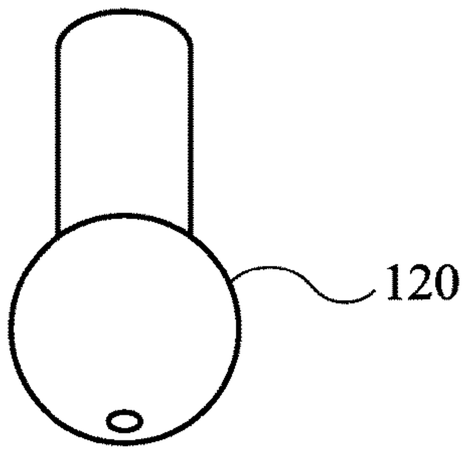

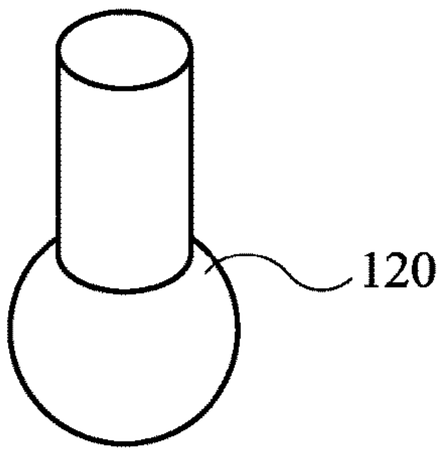

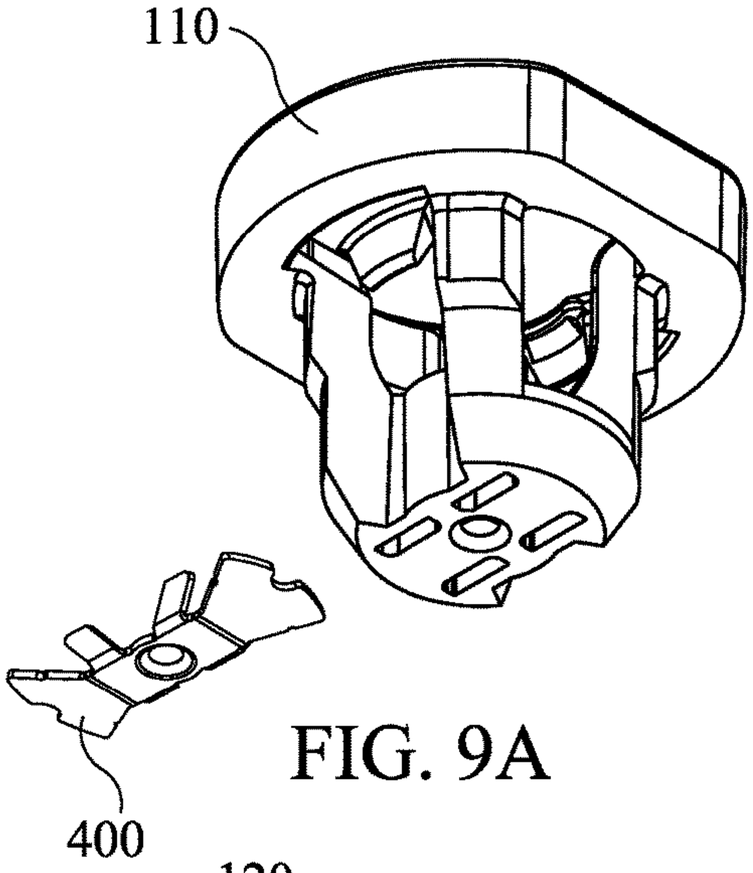

FIG. 9A

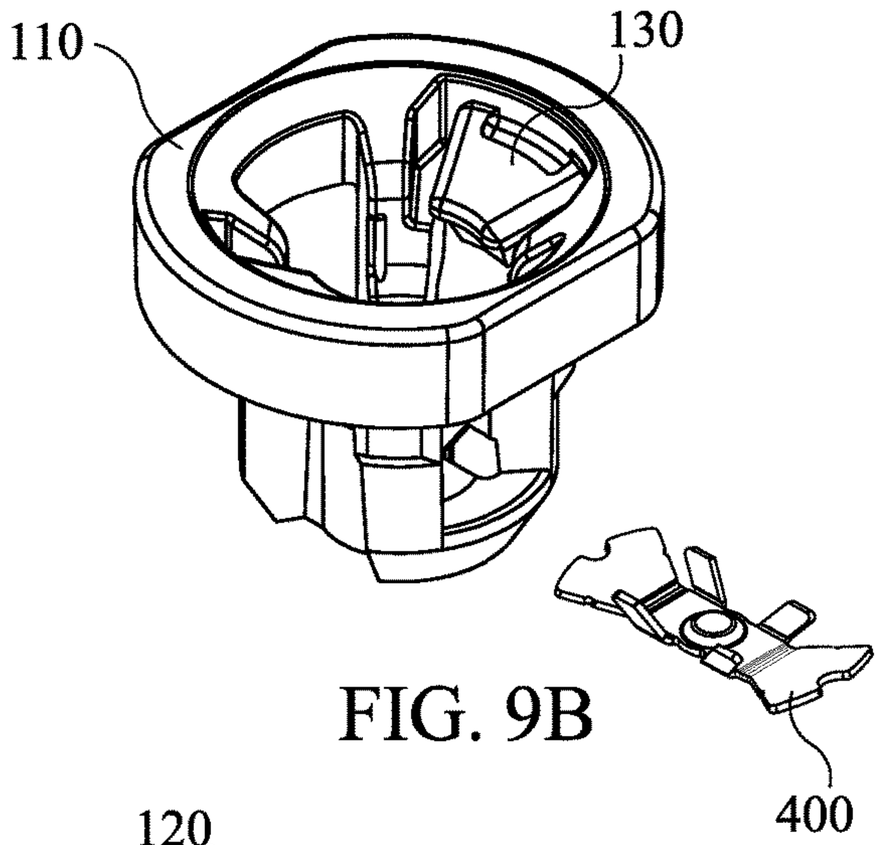

FIG. 9B

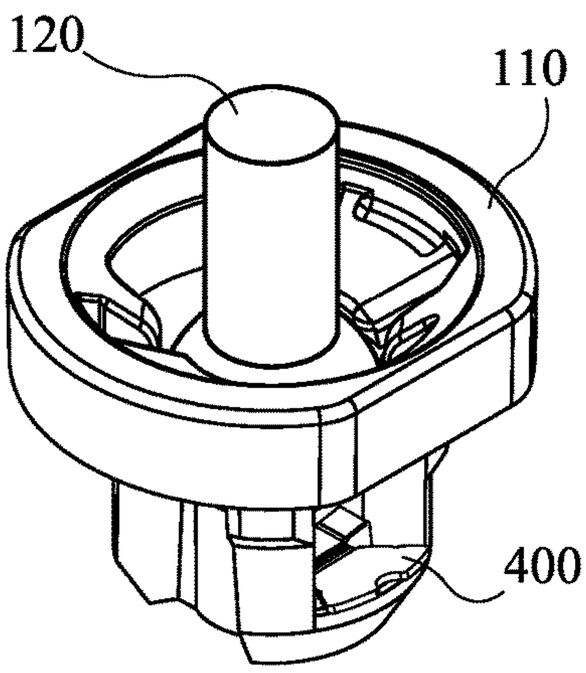

FIG. 9C

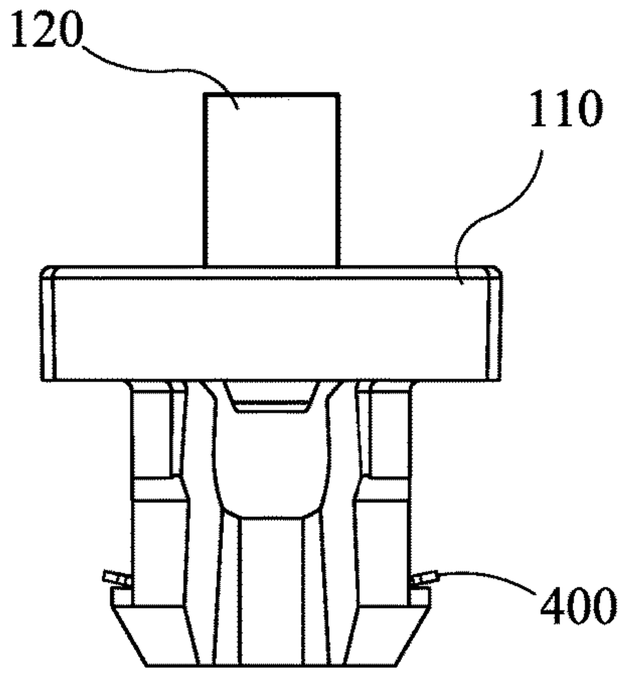

FIG. 9D

HIGH EXTRACTION FORCE BALL SOCKET

CROSS-REFERENCE TO RELATED APPLICATION

[0001] This application is a continuation of U.S. application Ser. No. 14/704,264 filed on Aug. 20, 2015, now U.S. Pat. No. 9,987,972 issued on Jun. 5, 2018, which is a continuation of U.S. application Ser. No. 13/778,351, filed on Feb. 27, 2013, now U.S. Pat. No. 9,140,294 issued Sep. 22, 2015, which claims the benefit of and priority to U.S. Provisional Patent Application No. 61/607,117 filed on Mar. 6, 2012, the disclosures of which are incorporated herein by reference in their entirety for all purposes.

FIELD OF THE INVENTION

[0002] The present invention relates generally to the field of pivot joints and has been found particularly useful as a pivot joint for connecting a headlamp adjuster to a reflector inside a headlamp assembly or an external reflector and lens headlamp assembly.

BACKGROUND OF THE INVENTION

[0003] Pivotable spherical joints, commonly referred to as ball joints, generally include a ball stud engaged in a socket. Such joints have a wide variety of applications where a pivotable connection between two parts is desirable. For example, they may be used in many types of linear actuators and have been found to be particularly useful in automotive lamp assemblies. As seen in U.S. Pat. No. 5,707,133 the disclosure of which is incorporated herein by reference, automotive lamp assemblies used as headlights typically comprise several basic parts: a support frame, a reflector, a lens, a bulb, and one or more adjusters.

[0004] In the automotive lamp assembly example, the support frame houses the reflector and the bulb on a pivotable mounting to allow the aim of the light to be adjusted using the adjuster. The lens seals the front of the assembly to protect it from the elements assailing the front end of the vehicle and provides an aerodynamic shape and attractive appearance. Typically, the reflector mounts inside the housing on one fixed ball joint and is adjustable horizontally and vertically using adjusters that interface with the reflector through moving ball joints. The moving ball joints are moveable by actuating the adjusters connected to the moving ball joints by a ball stud having a head and a shaft. Another type of automotive headlamp assembly that uses linear actuators is shown in U.S. Pat. No. 5,360,282. In this type of headlamp assembly the linear actuator is mounted to a bracket and the ball joint end supports a reflector, lens and light bulbs. This type of application requires a higher strength ball joint due to the additional weight being supported. In particular, pull-out strength of the ball joint needs to be greater to withstand vibration.

[0005] While one possible application of the present invention is in headlamp assemblies, other applications are possible and references to use in a headlamp assembly should not be deemed to limit the application of the present invention. Additionally, while the improved ball socket design described herein may be designed for use with a disengageable ball stud, such as those described in U.S. Pat. Nos. 6,113,301; 6,247,868; and 6,758,622, the disclosures of which are incorporated by reference, it can also be used advantageously with ball studs having "ears" or engaging tabs or semi-spherical ball stud designs. Examples of such adjusters are disclosed in U.S. Pat. Nos. 4,689,725; 5,186,531; and 6,758,622. One additional benefit of the ball joint of the present invention is that it eliminates the variances associated with using semi-spherical ball studs, resulting in consistent pull out resistance.

[0006] Conventional ball joints for use in automotive lamp assemblies typically include a ball stud with a spherical engagement head extending from an adjuster. The ball stud is moveable linearly in and out of the adjuster. While generally effective, there are a number of shortcomings to using a ball stud in a conventional socket that includes a plurality of resilient tabs to retain the ball stud. One such shortcoming is that the tabs typically contact the ball stud sphere up to or on a "tangent point" that is on an imaginary line between the pivot center of the ball stud and the center of the resilient tab, e.g., the configuration shown in U.S. Pat. No. 6,758,622. This configuration causes the force generated when the stud is subjected to pull-out force, to be directed along the imaginary line. This configuration results in a condition where the ball stud may be pulled out of socket under certain conditions of operation, such as vibration while supporting heavier reflectors or in heavier headlamp assemblies like the one previously referenced in U.S. Pat. No. 5,360,282, leaving the adjuster non-operational. This unexpected pull-out generally occurs because the retention tabs are necessarily flexible to allow the head to be installed in the socket. Though pull-out of the ball stud is resisted to some degree of success, if enough pull-out force is applied, the tabs deflect and the ball stud head slips through and "pops out." Reducing the flexibility of tabs is not a desirable option because it would either be too difficult to insert the ball stud head into socket, or the elasticity of the tabs would be lessened to the degree that they would break off during insertion of the ball stud.

[0007] While steel ball studs, particularly those with an undercut behind the head of the ball stud or ears that engage tabs or other structure can achieve high pull-out force resistance, it is often preferred to use a plastic ball stud to enable the use of more compact and lighter weight adjuster designs. Further, plastic ball studs can be designed that have undercuts behind the heads, tabs or other retaining structure, but for manufacturing, installation, and design flexibility, a full round ball stud head is generally preferred.

[0008] Accordingly, the need exists for an improved ball socket that securely retains a ball stud placed therein, can be effectively used in connection with disengageable or conventional ball studs, can be effectively used with plastic ball studs, is cost effective, and has greater resistance to accidental pull-out.

SUMMARY OF THE INVENTION

[0009] The present invention relates to an improved ball joint which includes resilient tabs that contact an inserted ball stud at a location toward the shank of the ball stud from the previously described tangent point. Certain embodiments of a ball joint in accordance with the present invention are capable of being used in automotive lamp assemblies and solve some or all of the problems raised or not solved by existing ball joints. Of course, the present invention may be used in a multitude of non-automotive lamp situations where similar performance capabilities are required.

[0010] It will be understood by those skilled in the art that one or more aspects of this invention can meet certain

objectives, while one or more other aspects can lead to certain other objectives. Other objects, features, benefits and advantages of the present invention will be apparent in this summary and descriptions of the disclosed embodiment, and will be readily apparent to those skilled in the art. Such objects, features, benefits and advantages will be apparent from the above as taken in conjunction with the accompanying figures and all reasonable inferences to be drawn therefrom.

BRIEF DESCRIPTION OF THE DRAWINGS

[0011] FIG. **1** is a perspective view of one embodiment of a ball-socket in accordance with the present invention, shown with a ball stud and a socket mounting screw;

[0012] FIG. **2** is another perspective view of the ball-socket of FIG. **1**, shown with the ball stud (not inserted) and a socket mounting screw;

[0013] FIG. **3** is a section view of the ball-socket of FIG. **1**;

[0014] FIG. **4** is another perspective view of the ball-socket of FIG. **1**, shown with the ball stud in a pivoted position;

[0015] FIG. **5** is another section view of the ball-socket of FIG. **1**;

[0016] FIG. **5**A is a detail view of a portion of the section view of FIG. **5**;

[0017] FIG. **6** is a section view of the ball-socket of FIG. **1**, shown at the moment the ball stud is inserted into the ball-socket to illustrate the bending moment applied to the ball-socket;

[0018] FIG. **7** is another section view of the ball-socket of FIG. **1**, shown at the moment a pull-out force is applied to the ball stud to illustrate the bending moments applied to the ball-socket;

[0019] FIG. **8**A is an bottom perspective view of another embodiment of a ball-socket in accordance with the invention, shown removed from a base material and with a ball stud (not inserted);

[0020] FIG. **8**B is a top perspective view of the ball-socket of FIG. **8**A, shown inserted into the base material and with a ball stud (not inserted);

[0021] FIG. **8**C is another top perspective view of the ball-socket of FIG. **8**A, shown inserted into the base material and with a ball stud (inserted);

[0022] FIG. **8**D is a side view of the ball-socket of FIG. **8**A, shown inserted into the base material and with a ball stud (inserted);

[0023] FIG. **9**A is a bottom perspective view of another embodiment of a ball-socket in accordance with the invention, shown with a ball stud (not inserted);

[0024] FIG. **9**B is a top perspective view of the ball-socket of FIG. **9**A, shown with a ball stud (not inserted);

[0025] FIG. **9**C is another top perspective view of the ball-socket of FIG. **9**A, shown with a ball stud (inserted); and

[0026] FIG. **9**D is a side view of the ball-socket of FIG. **9**A, shown with a ball stud (inserted).

DETAILED DESCRIPTION

[0027] FIGS. **1-7** show one embodiment of a ball-socket **100** in accordance with the invention. The ball-socket **100** has a socket **110** and a ball stud **120**. The ball stud **120** includes a spherical portion **122** and a shank **124**. The socket **110** includes a plurality of resilient tabs **130** and a plurality of support legs **140**. The resilient tabs **130** and support legs are attached to an exterior collar **160**. Together, the resilient tabs **130** and support legs **140** combine to form a cavity **150** in which the ball stud **120** may pivot and rotate. The resilient tabs **130** elastically deform when the ball stud **120** is inserted into the socket **110**. In the embodiment shown in FIGS. **1-7**, the socket **110** is secured to its desired location via a screw **165**.

[0028] FIG. **3** shows a cross-section of the ball-socket **100**. When a pull-out force is applied to the ball-stud **120**, it contacts resilient tabs **130** causing a portion of the pull-out force to be transferred through the resilient tabs **130** to the exterior collar **160**. In the embodiment shown, the exterior collar **160** has a generally uniform and circular rim shape that withstands significant radial force without significant deflection. Other shapes could be used for the exterior collar **160** without departing from the invention.

[0029] FIG. **4** is another perspective view of the ball-socket **100** showing the ball stud **120** in a pivoted orientation. As should be apparent, the ball stud **120** may pivot and rotate within the ball-socket **100**.

[0030] FIGS. **5** and **5**A are helpful in explaining the geometry that provides the improved pull-out force resistance while maintaining lower push-in force. FIG. **5** is a cross-section view of the ball-socket **100** and FIG. **5**A is a detail view of FIG. **5** showing the points of contact between one of the resilient tabs **130** and the ball stud **120**. The spherical portion **122** of the ball stud **120** has a center point C and a radius R. The resilient tabs **130** form an inner diameter D that is larger than the diameter of the shank **124** and smaller than the diameter of the spherical portion **122**. A theoretical line **200** is shown that runs from the center point C to the fulcrum center point ("P**3**") of the resilient tab **130**. A theoretical tangent point **202** is shown where the theoretical line **200** intersects the outer edge of the spherical portion **122** of the ball stud **120**. As shown, the resilient tabs **130** contact the spherical portion **122** of the ball stud **120** at an upper point of contact P**1**. When a pull-out force is applied to the ball stud **120**, a portion of the force is directed to the resilient tabs **130** along a line from the center of the spherical portion of the ball stud **120** to the upper point of contact P**1** rather than along theoretical line **200**.

[0031] The resilient tabs **130** further include a journal area **170** that is positioned to contact the ball stud **120** below the aforementioned theoretical tangent point **202** while the ball-socket **100** is in normal operation, e.g. when a pull-out force is applied to the ball stud **120**. The journal area **170** has a short leg **172** that contacts the spherical portion **122** on the shank side of the theoretical tangent point **202** and a long leg **174** that extends down spherical portion **122** on the other side of the theoretical tangent point **202**. In between the short leg **172** and long leg **174** is a transition surface **176**. Both the long leg **174** and the transition surface **176** are shown having some clearance from the spherical portion **122** but could also closely follow the contour of spherical portion. For ease of manufacturing due to the looser tolerances that could be used, having some clearance is believed to be advantageous. Additionally, having a clearance between the journal area **170** and the ball stud **120** allows the inner diameter D to decrease and tighten around the ball stud when the ball stud is under pull-out load.

[0032] When a pull-out force is applied to the ball stud **120**, the journal area **170** comes into contact with the

spherical portion **122**, thereby resisting the bending deformation of the resilient tabs **130**. In addition to contacting the spherical portion **122** at upper point of contact P**1**, the long leg **174** contacts the spherical portion at a lower point of contact P**2**. When determining the size and shape of the resilient tabs **130**, it is useful to measure the distance from the center point C to each of the contact points P**1** and P**2** and fulcrum center point P**3**. Each distance is shown in FIGS. **5** and **5***a* as H**1**, H**2**, and H**3** respectively. Similarly, the horizontal distance from the center point C to the contact points P**1** and P**2** and fulcrum center point P**3** are shown in FIG. **5** as A**1**, A**2**, and A**3** respectively. The transition surface **176** does not contact the spherical portion **122** of the ball stud **120** ensuring that all of the pull out force is transferred to the resilient tabs **130** through the aforementioned contact points.

[0033] The trigonometric relationships between the distances described above allow the ball stud **120** to exhibit exemplary pull-out resistance, while simultaneously allowing insertion of the ball stud comparatively with little effort. To achieve these properties, distance H**1** is approximately equal to radius R. H**2**, meanwhile, is greater than or equal to H**1**. The greater the difference between H**2** and H**1** allows for an exterior collar **160** that may be less resilient. The ratio of H**1**/A**1** is greater than or equal to H**3**/A**3**. Finally, H**3**/A**3** is greater than H**2**/A**2**.

[0034] The configuration of the ball-socket **100** is also such that when a pull-out force is applied to the ball stud **120**, the force is not directed along the tangent line as in prior art ball-sockets. Rather, the force is applied to the resilient tabs **130** along lines running from center point C to upper contact point P**1** and lower contact point P**2**, thereby reducing the moment force directly applied to the base of the resilient tab **130** and creating dual moment forces. FIGS. **6** and **7** show the bending moments generated during insertion of the ball stud **120** and when the ball stud is subjected to pull out force.

[0035] As shown in FIG. **6**, when the ball stud **120** is inserted into the ball-socket **100**, only a single bending moment force (indicated by arrow M) is applied at the base of the resilient tabs **130**. The single bending moment and free rotation of the resilient tabs **130** results in easy insertion of the ball stud **120** into the socket **110**.

[0036] FIG. **7** shows the socket **110** under load. The resilient tabs **130** deform in an arcuate shape, with the section between the journal area **170** and the collar **160** deforming upwardly in the general direction of the shank **124**. Such arcuate deformation occurs under pull-out loads significantly higher than those experienced during normal operation and during extreme vibration shock load. The base of the resilient tabs **130** bend in the direction of the pull out force because the short leg **162** contacts toward the shank **124** from the tangent point **202**. However, the long leg **164** contacts toward the spherical portion **122** from the tangent point **202** and arrests this bending rotation. The end result is a double bend within the resilient tab **130** and the arc shaped deformation that greater resists pull out. Such a configuration places the resilient tabs not only in compression, as in the prior art, but also a double bending rotational moment that greater resists pull out (see double moment forces indicated by arrows M in FIG. **7**), thereby allowing the socket **110** to resist failure until much higher loads than prior art ball-sockets. In the embodiment shown, material strength, resilient tab **130** and exterior collar **160** thickness are the primary determining factors for pull out. Frictional variance between the ball stud **120** and the socket **110** are essentially eliminated as a factor because as the resilient tabs **130** deform, the inner diameter D reduces and closes in behind the spherical portion **122** preventing slip-through and requiring that the resilient tabs **130** fail in order to remove the ball stud **120**.

[0037] Insertion force of a ball stud into a socket in an automotive headlamp assembly is typically desired to be less than 125N to allow for hand assembly. Prior art ball-sockets are not able to achieve such a low insertion force without sacrificing pull out resistance do to their construction. As a result, the typical insertion force for the prior art ball-sockets (when using a full round plastic ball stud) is around 199N when the socket is made from a polyoxymethylene ("POM") plastic with a relatively flexible tensile modulus of around 1300 MPa.

[0038] The ball socket of the present invention **100** does not include middle portions connecting the resilient tabs **130** to the base of the socket. The resilient tabs **130** bend in one direction as a normal cantilevered beam. The resistance to bending in the direction of ball stud insertion is mostly determined by the length and thickness of the resilient tabs **130**. Thus, even using a more rigid POM material, e.g., one having a tensile modulus of around 3000 MPa, the ball socket of the present invention **100** achieves an average insertion force (when using a full round plastic ball stud) of around 80N. Once the ball stud is installed, the resilient tabs **130** snap back to the position as shown in FIG. **5** and the upper contact point P**2** contacts the ball stud above the previously mentioned tangent point.

[0039] Pull-out force is in part determined by the overall diameteral interference between the ball stud **120** outer diameter and the resilient tabs **130** diameter D. Injection molding this interference into prior art ball-sockets require a tool steel undercut. A core pin tool steel forms both these features but the plastic material of the socket **110** must have the elastic ability to stretch over the tool steel upon ejection from the mold in the same manner as the ball stud **120** being pulled out of the socket. Diametral interference is hence limited with prior art ball-sockets due to material elasticity and this undercut method of manufacturing the socket. The available elastic materials generally have lower stiffness and lower strength and this limits the prior art design pull out force. One material used for prior art ball-sockets for example is a POM plastic with a fairly flexible tensile modulus of 1300 MPa. Prior art ball-sockets typical pull out force (for a plastic full round ball stud) with this material is 317N. Some applications in the automotive headlamp field now require above 440N pull out force and the prior art design cannot achieve such a pull-out force resistance with a full round plastic ball stud without making it essentially impossible to insert the ball stud.

[0040] The pull out force of a socket **110** in accordance with the present invention is also increased because the resilient tabs **130** need not to be formed using the undercut method of manufacturing. Instead, the desired diameteral interference for pull out may be formed with mating tool steel. A more rigid POM plastic with a higher tensile modulus of 3000 MPa may therefore be used as well as greater interference levels. In testing of prototypes, the average pull out force for a full round plastic ball stud and a socket in accordance with the present invention made with such a material is 700N.

[0041] FIGS. **8-9** show two alternative embodiments of the socket **110**. In FIG. **8**, the socket **110** is secured to a hole **302** in a sheet of material **300** by a plurality of resilient or retention tabs **310** which allow the socket to be snapped into the hole. The retention tabs **310** include cutouts **312** that snap the socket **110** to the material **300**. As best seen in FIG. **8**D, the retention tabs **310** also serve a function similar to the support legs **140** in the embodiment shown in FIGS. **1-7**—they form the cavity in which the ball is disposed when engaged in the socket **110**. After the ball stud **120** is inserted, the retention tabs **310** are prevented from further inward movement, further securing the socket **110** to the material **300**. In FIG. **9**, the socket **110** is secured to its desired location (a hole in a thicker sheet or a boss structure) via a push-in clip **400**. Such a clip-retaining feature is shown, for example, in U.S. Pat. No. 7,845,837, the disclosure of which in incorporated herein by reference. Other than the method of securing the socket **110** to a material or hole, the foregoing two embodiments function in the same way as the embodiment in FIGS. **1-7**. Of course, other methods for securing the socket **110** can be used without departing from the invention. Further, the socket **110** could also be molded directly as part of another assembly.

[0042] Although the invention has been herein described in what is perceived to be the most practical and preferred embodiments, it is to be understood that the invention is not intended to be limited to the specific embodiments set forth above. Rather, it is recognized that modifications may be made by one of skill in the art of the invention without departing from the spirit or intent of the invention and, therefore, the invention is to be taken as including all reasonable equivalents to the subject matter of the appended claims and the description of the invention herein.

What is claimed is:

1. A socket comprising:

a collar;

a plurality of resilient tabs attached to and extending radially inward from the collar and terminating in ends, each end comprising a journal area extending at an angle relative to a remainder of the one of the plurality of resilient tabs, the journal area comprising:

a first ball contact surface defining a first ball receiving opening of a diameter D; and

a second ball contact surface, the second ball contact surface being spaced apart from the first ball contact surface, and defining a second ball receiving opening of a diameter greater than the diameter D, wherein the second ball contact surface is spaced apart from the first ball contact surface by a transition surface;

at least one retention tab depending from the collar and including a cutout configured to permit the socket to be snap-fit into a hole in a sheet of material; and

a plurality of support legs depending from the collar and forming a cavity shaped to receive a spherical portion of a ball stud and allow it to pivot and rotate therein.

2. The socket according to claim **1** wherein the second ball contact surface is further away from an end of the socket adjacent the collar than the first ball contact surface.

3. The socket according to claim **2** wherein the application of a pull-out force to the ball stud when received in the cavity imparts a dual moment on each of the plurality of resilient tabs.

4. The socket according to claim **3** wherein the second ball contact surface is spaced apart from the first ball contact surface by a transition surface such that an applied pull-out force is transferred to the resilient tab through the first ball contact surface and the second ball contact surface but not through the transition surface.

* * * * *