US 20180055152A1

(19) **United States**

(12) **Patent Application Publication**

WILLIAMS

(10) **Pub. No.: US 2018/0055152 A1**

(43) **Pub. Date: Mar. 1, 2018**

(54) **BUTTON CARRIER/ADAPTOR ASSEMBLY AND DEVELOPED BUTTONHOLE**

(71) Applicant: **Lindsay Joseph WILLIAMS**, Clarinda, Victoria (AU)

(72) Inventor: **Lindsay Joseph WILLIAMS**, Clarinda, Victoria (AU)

(21) Appl. No.: **15/565,393**

(22) PCT Filed: **Apr. 8, 2016**

(86) PCT No.: **PCT/AU16/00126**

§ 371 (c)(1),
(2) Date: **Oct. 9, 2017**

(30) **Foreign Application Priority Data**

Apr. 8, 2015 (AU) 2015901259

Publication Classification

(51) **Int. Cl.**

A44B 1/34	(2006.01)
A44B 1/14	(2006.01)
A44B 1/04	(2006.01)
A41F 1/02	(2006.01)

(52) **U.S. Cl.**

CPC ***A44B 1/34*** (2013.01); ***A41F 1/02*** (2013.01); ***A44B 1/04*** (2013.01); ***A44B 1/14*** (2013.01)

(57) **ABSTRACT**

A button carrier/adaptor assembly includes an anchor section, to which is attached a head section, and to which is attached a decorative cap. The decorative cap can be a separate removable and replaceable component or incorporated into the head section. The anchor section includes a planar base and a shaped protrusion, which will form the core of the total assembly. From an elevation view, the protrusion has a profile including a teardrop shaped distal section mounted to the base by a proximal shaft. The head section includes an upper mount portion and a hollow central shank that is partially hollow and includes an internal cavity from an open bottom end thereof. The internal cavity has an elevation profile which matches the profile of the shaped protrusion of the anchor section.

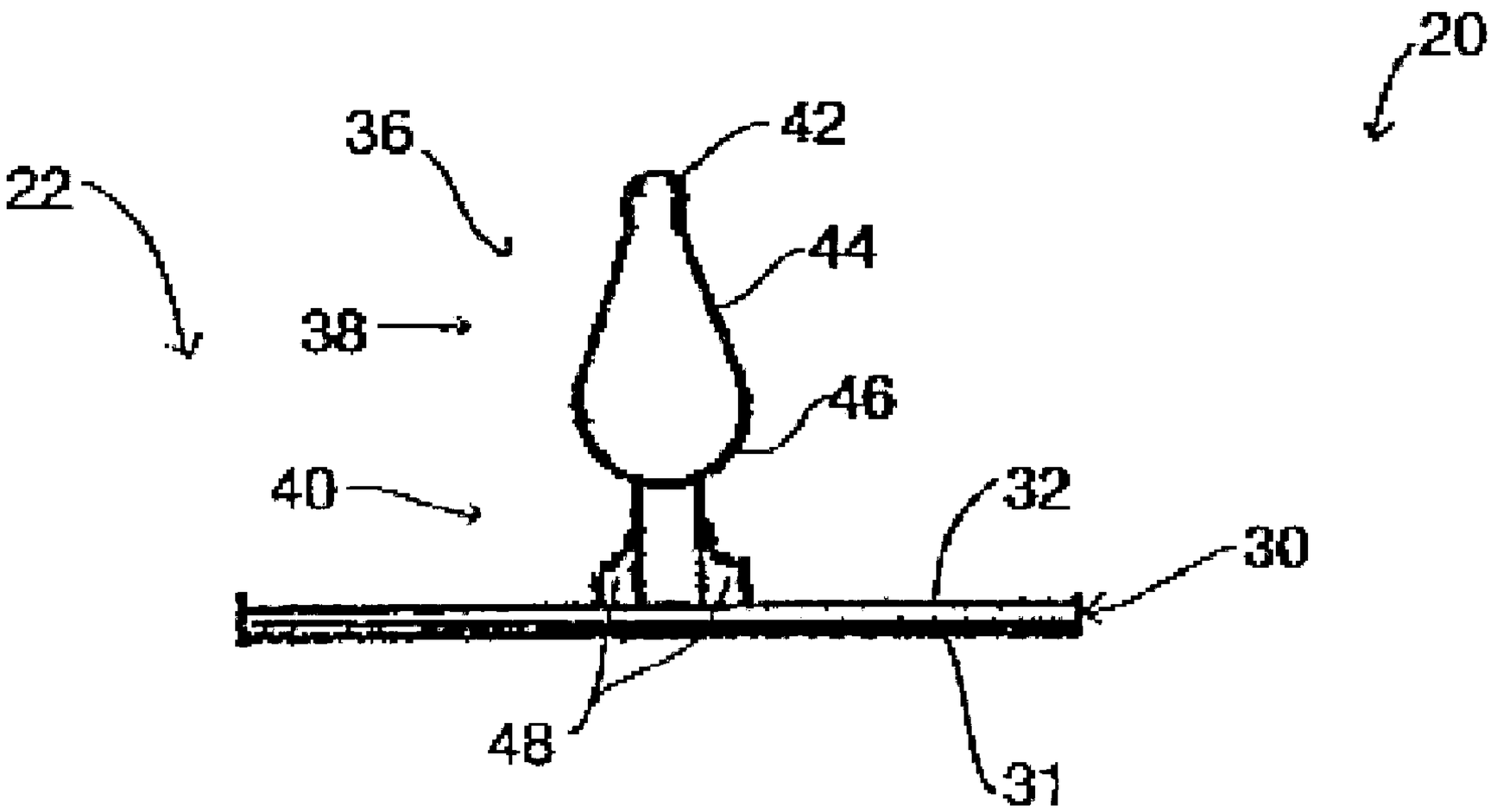

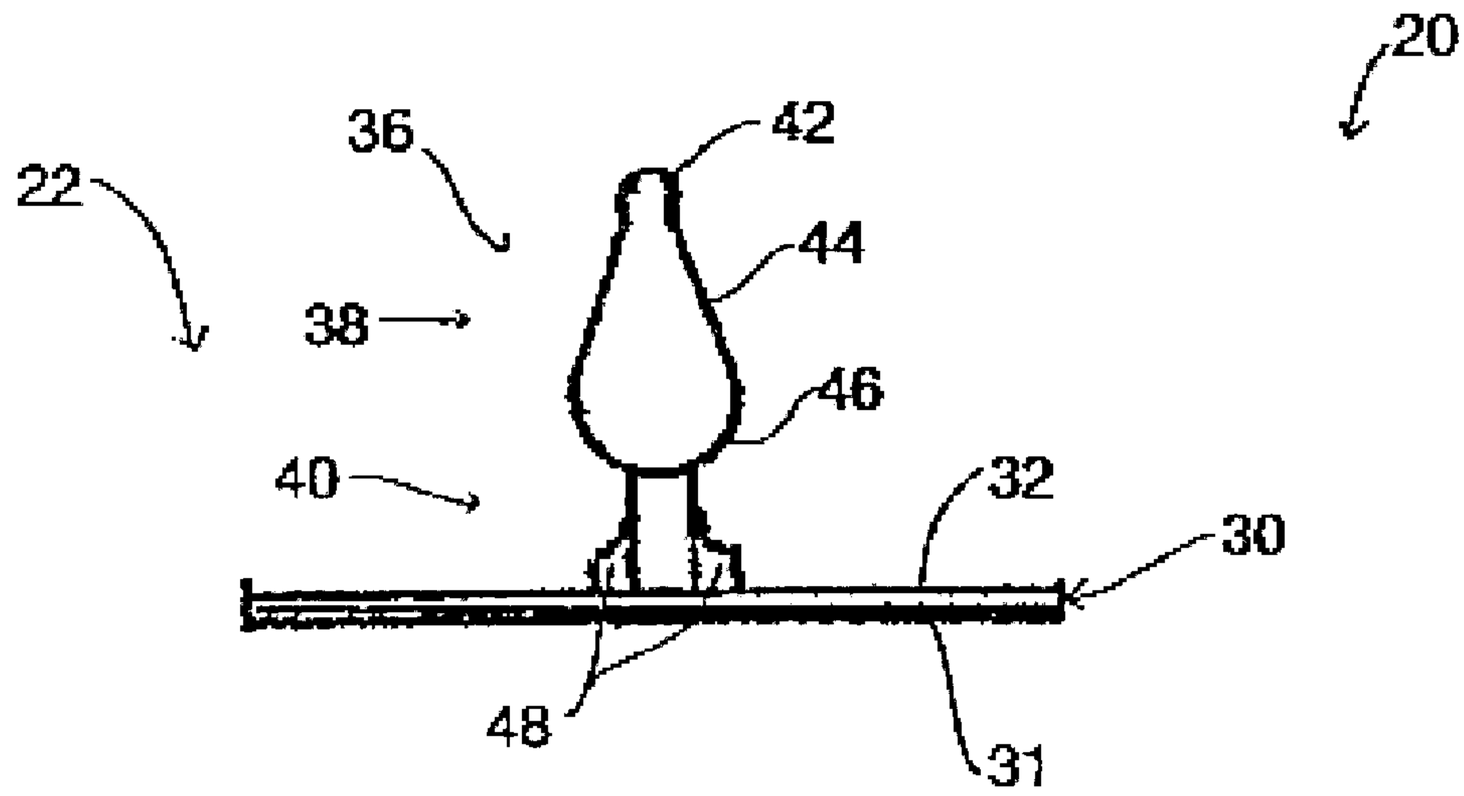

FIGURE 1

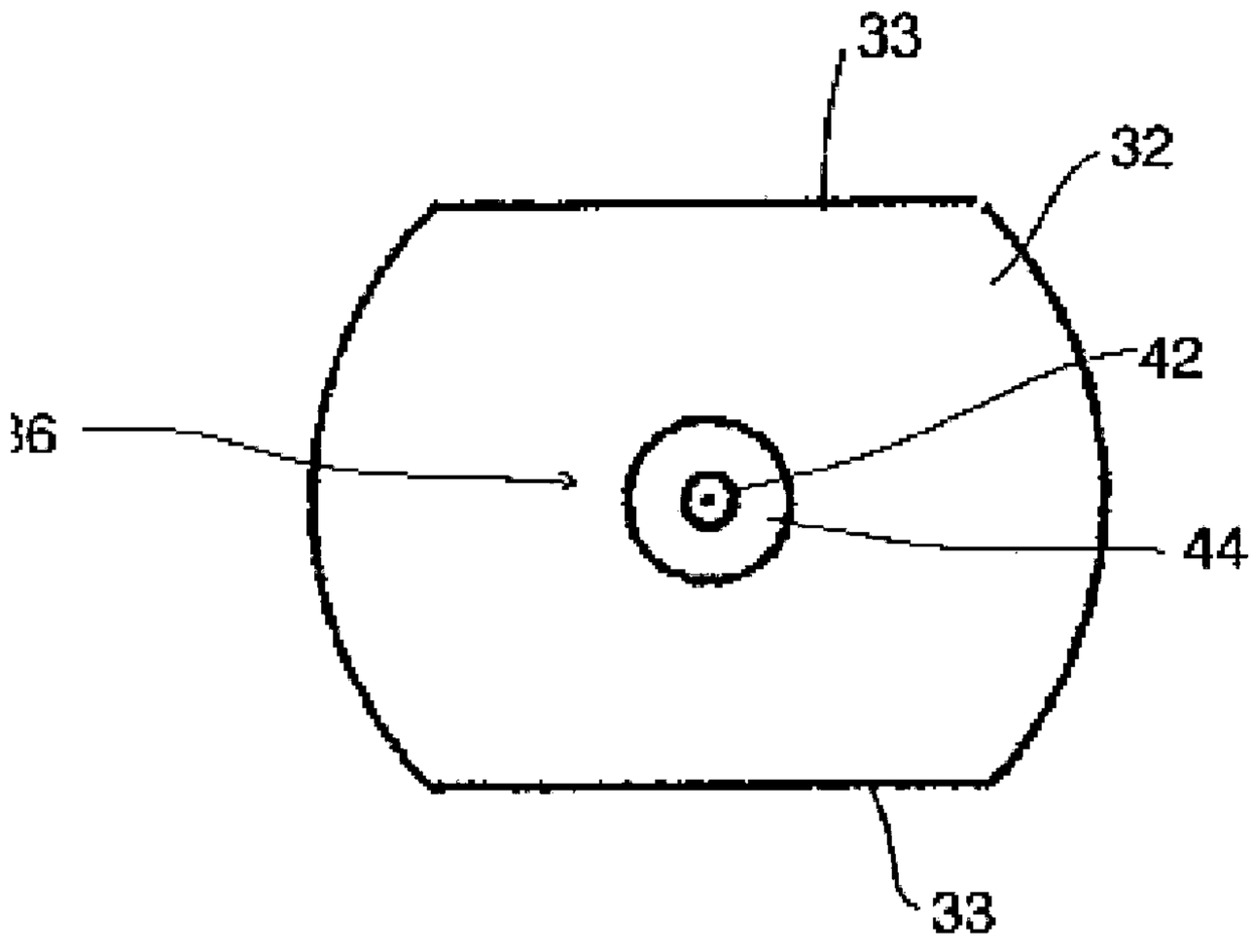

FIGURE 2

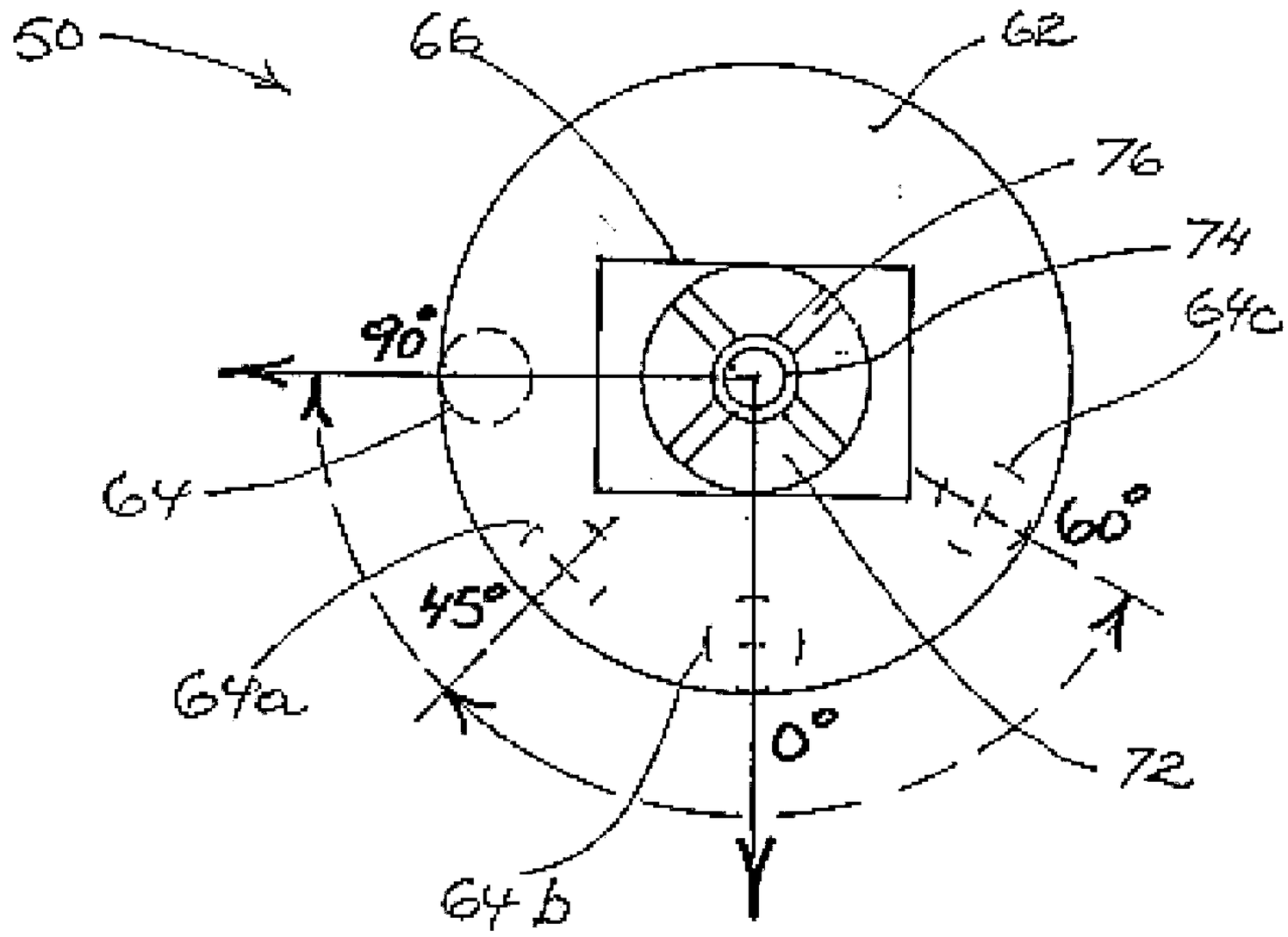

FIGURE 3

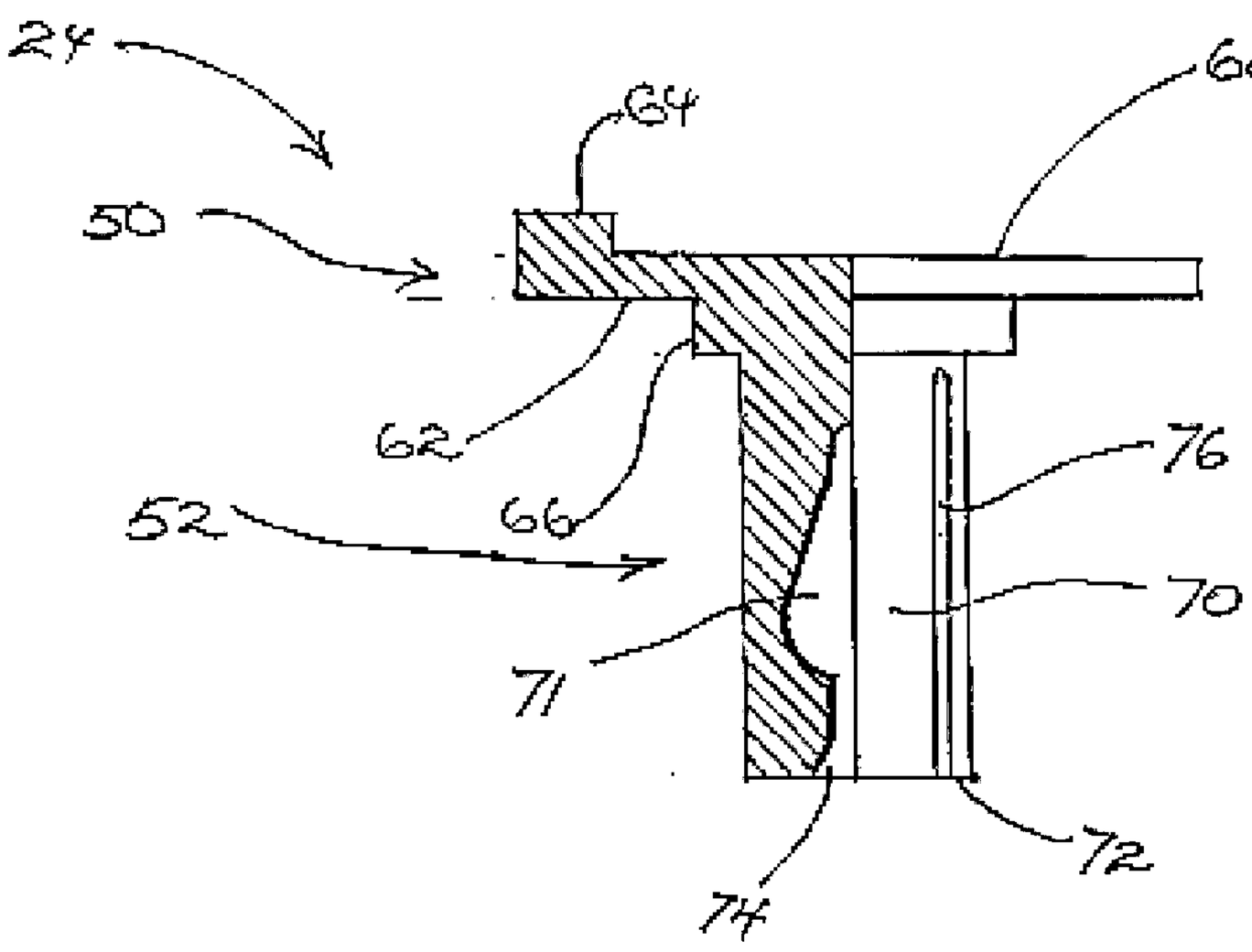

FIGURE 4

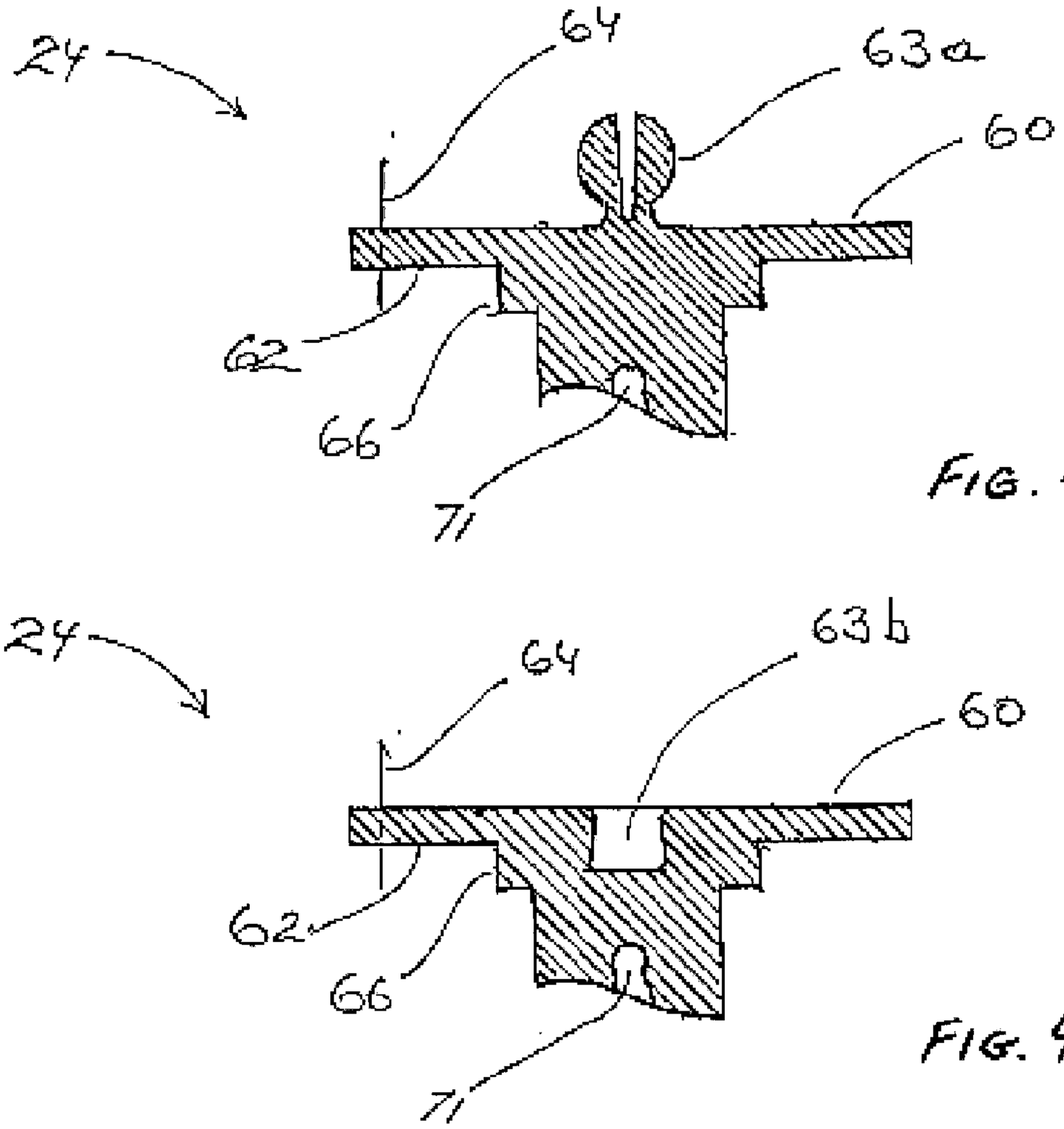

FIG. 4a

FIG. 4b

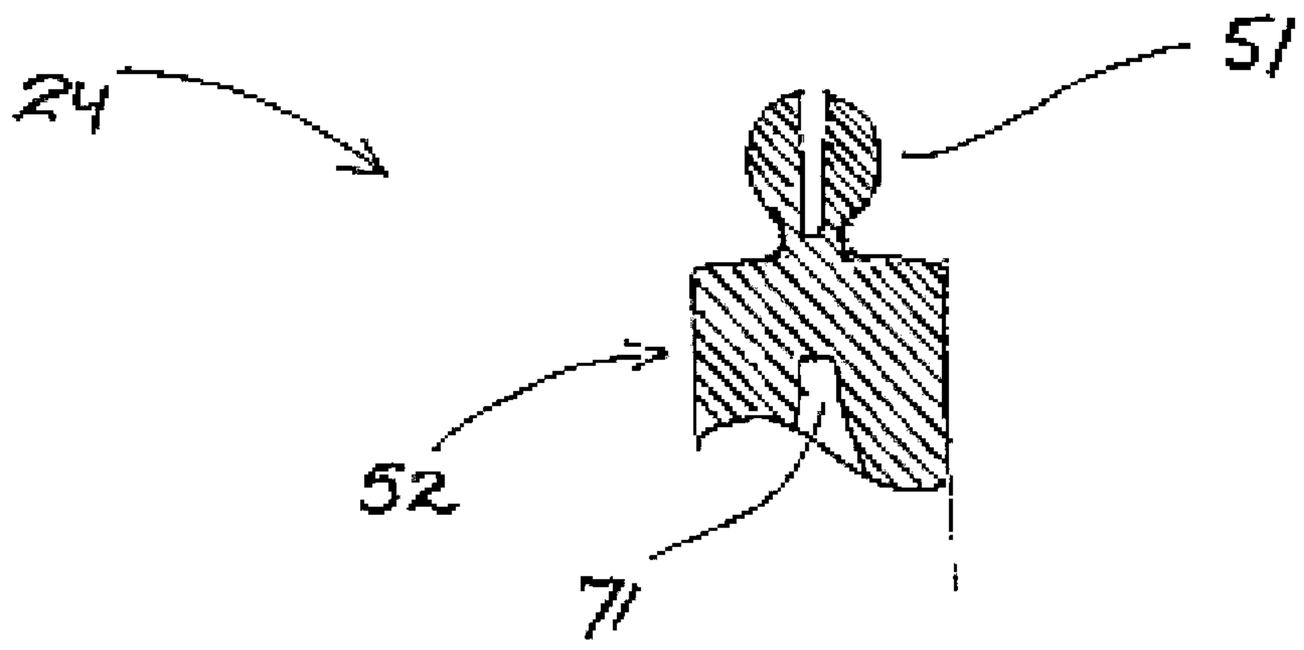

FIG. 4c

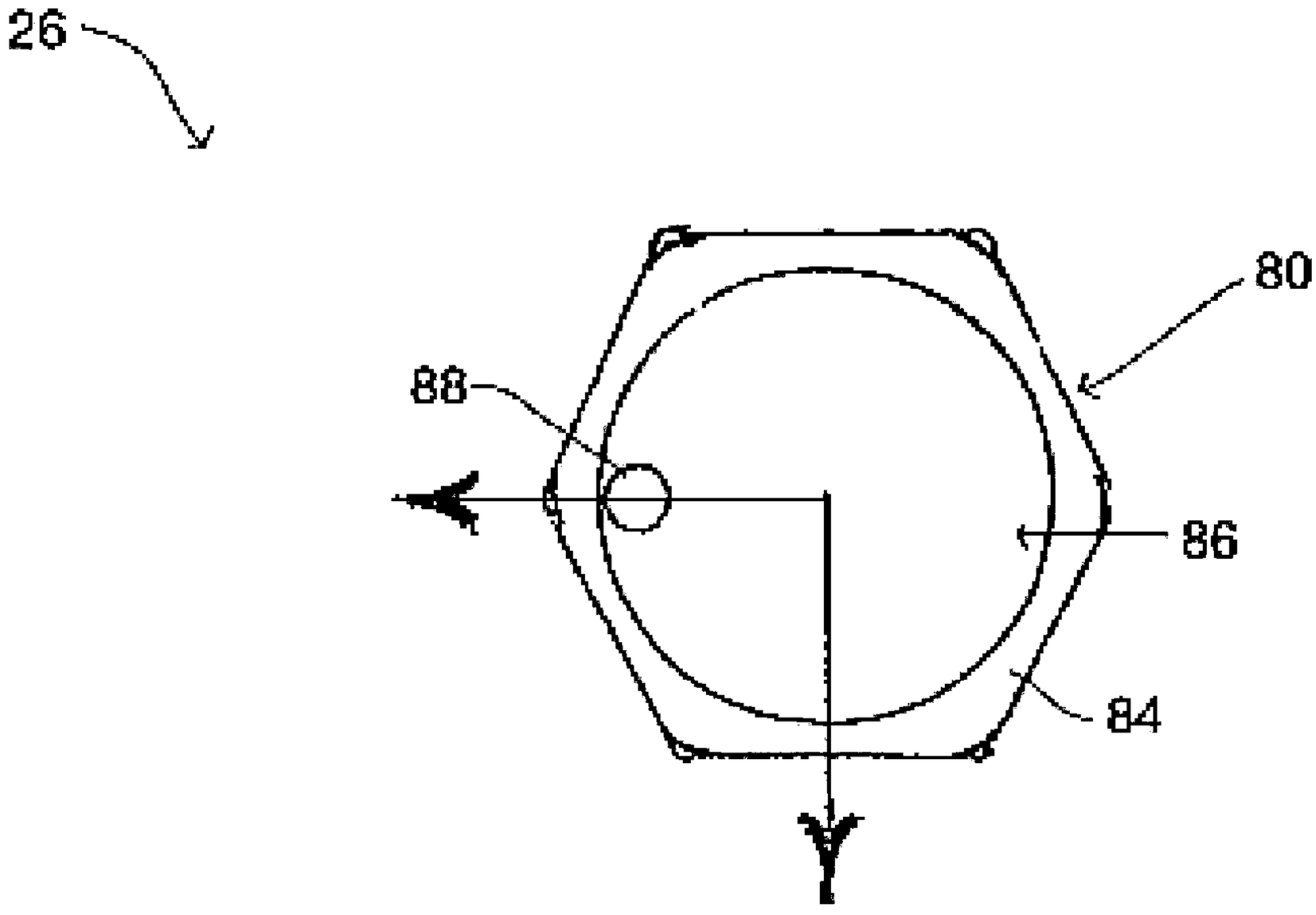

FIGURE 5

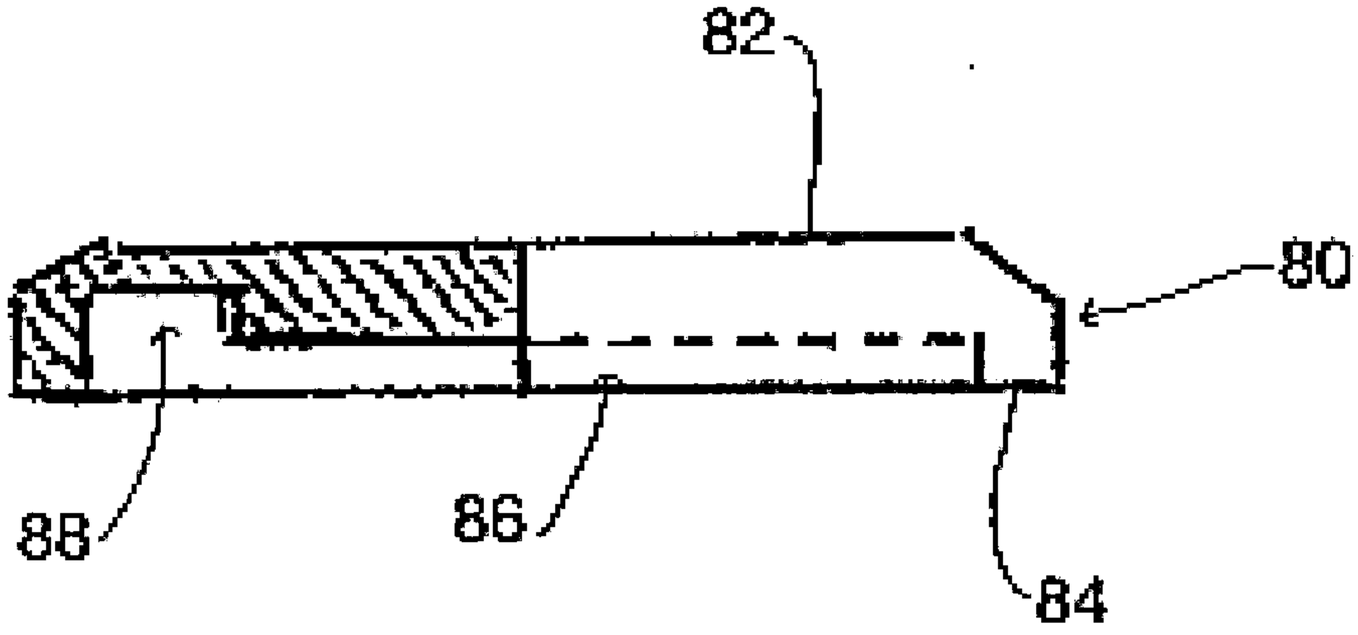

FIGURE 6

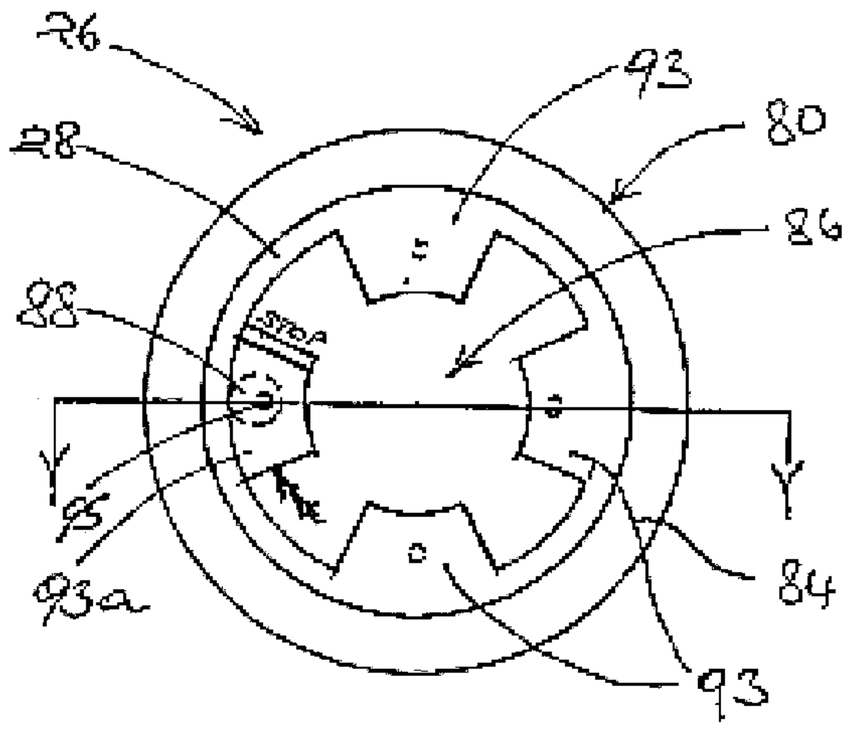

FIGURE 7

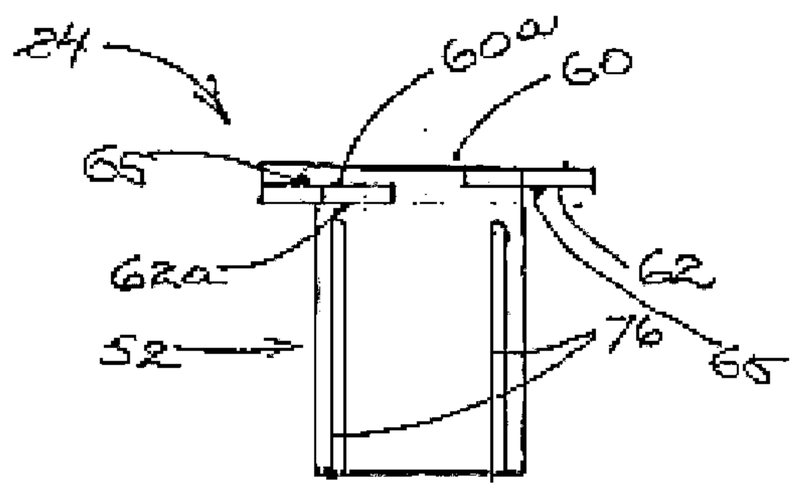

FIGURE 10

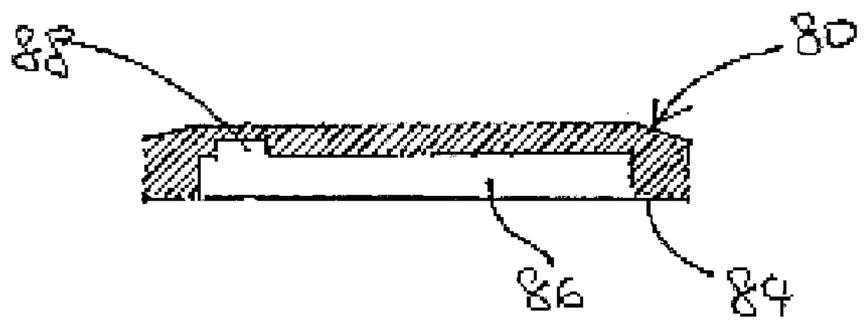

FIGURE 8

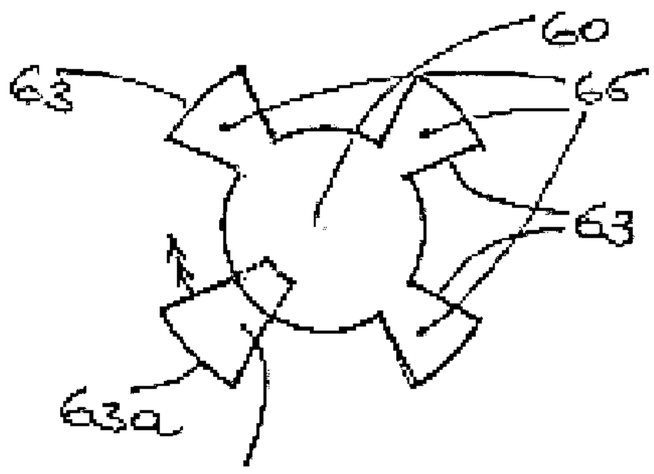

FIGURE 11

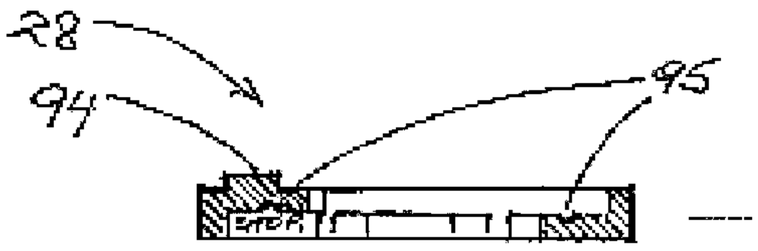

FIGURE 9

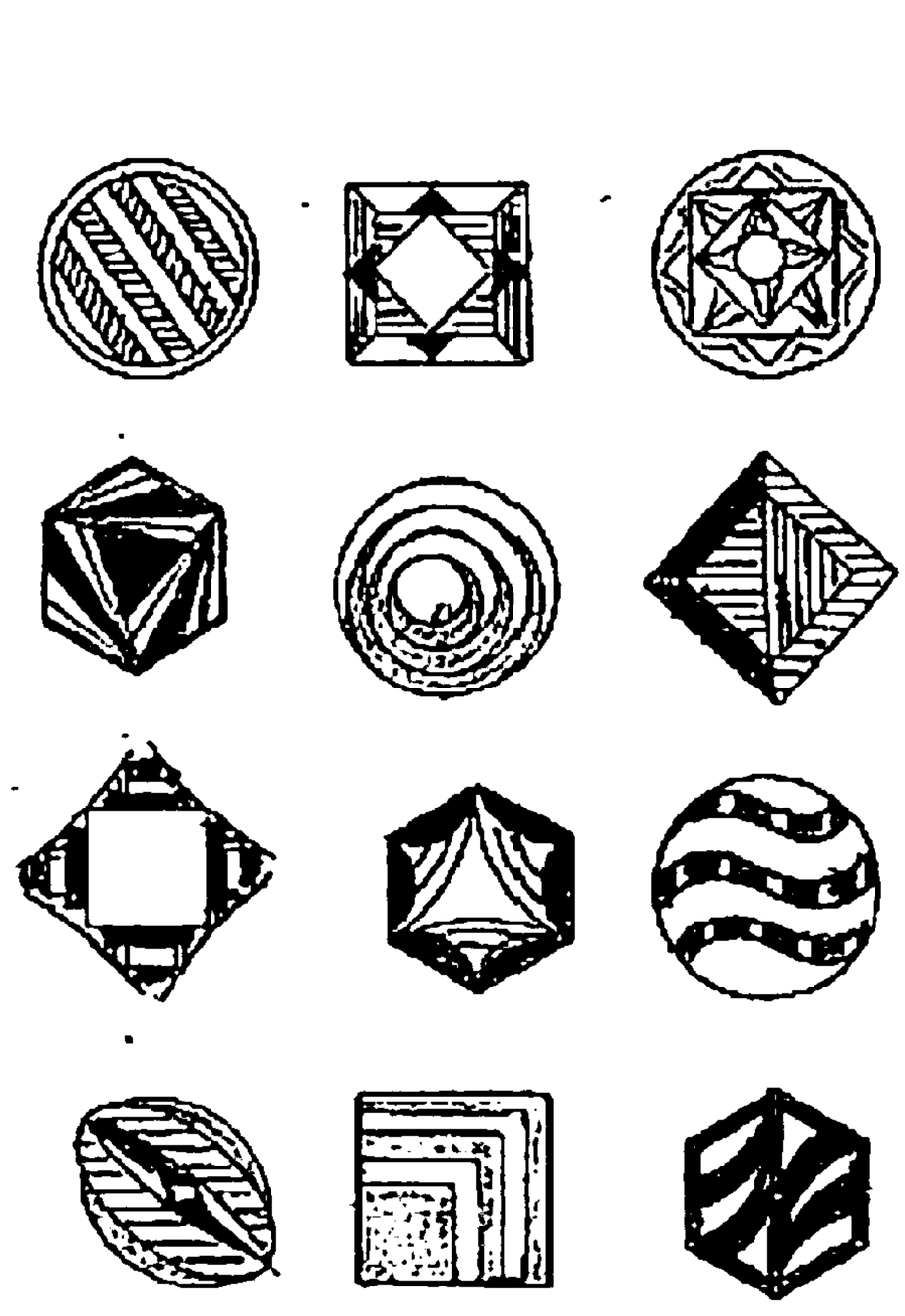

FIGURE 12

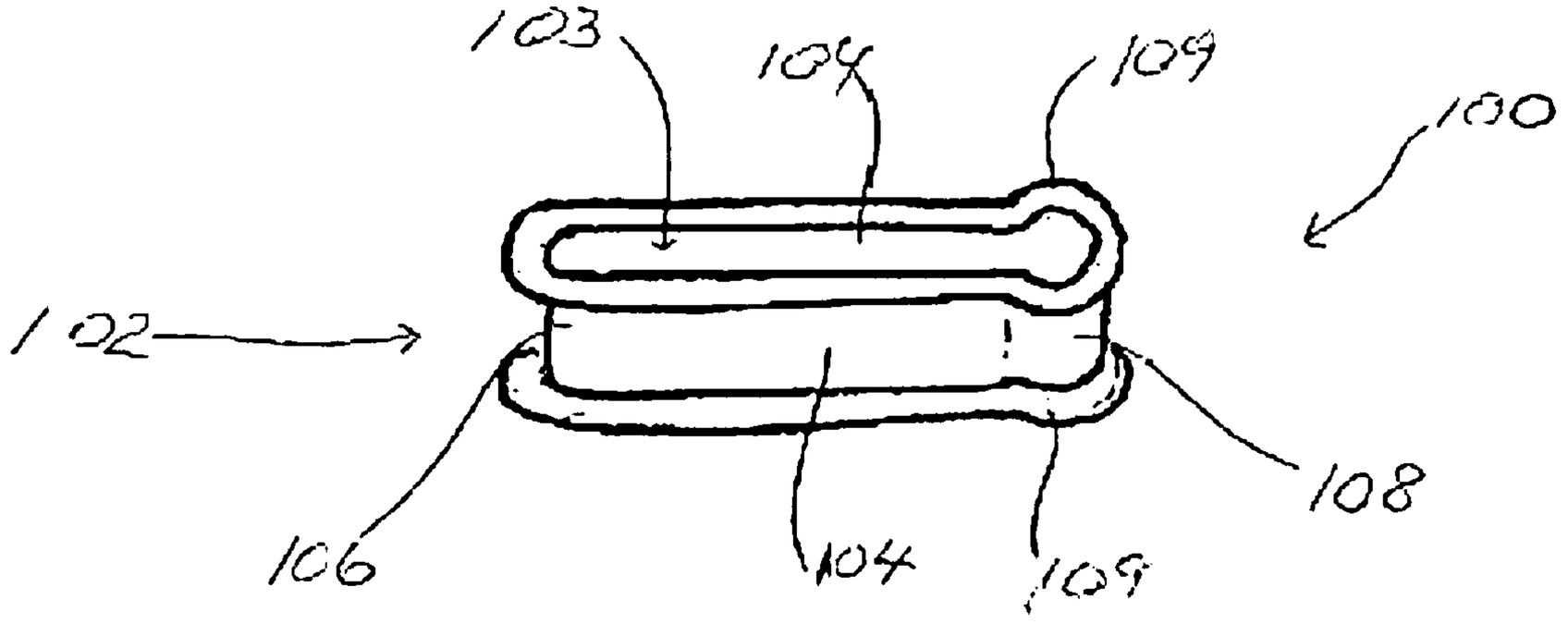

FIGURE 13

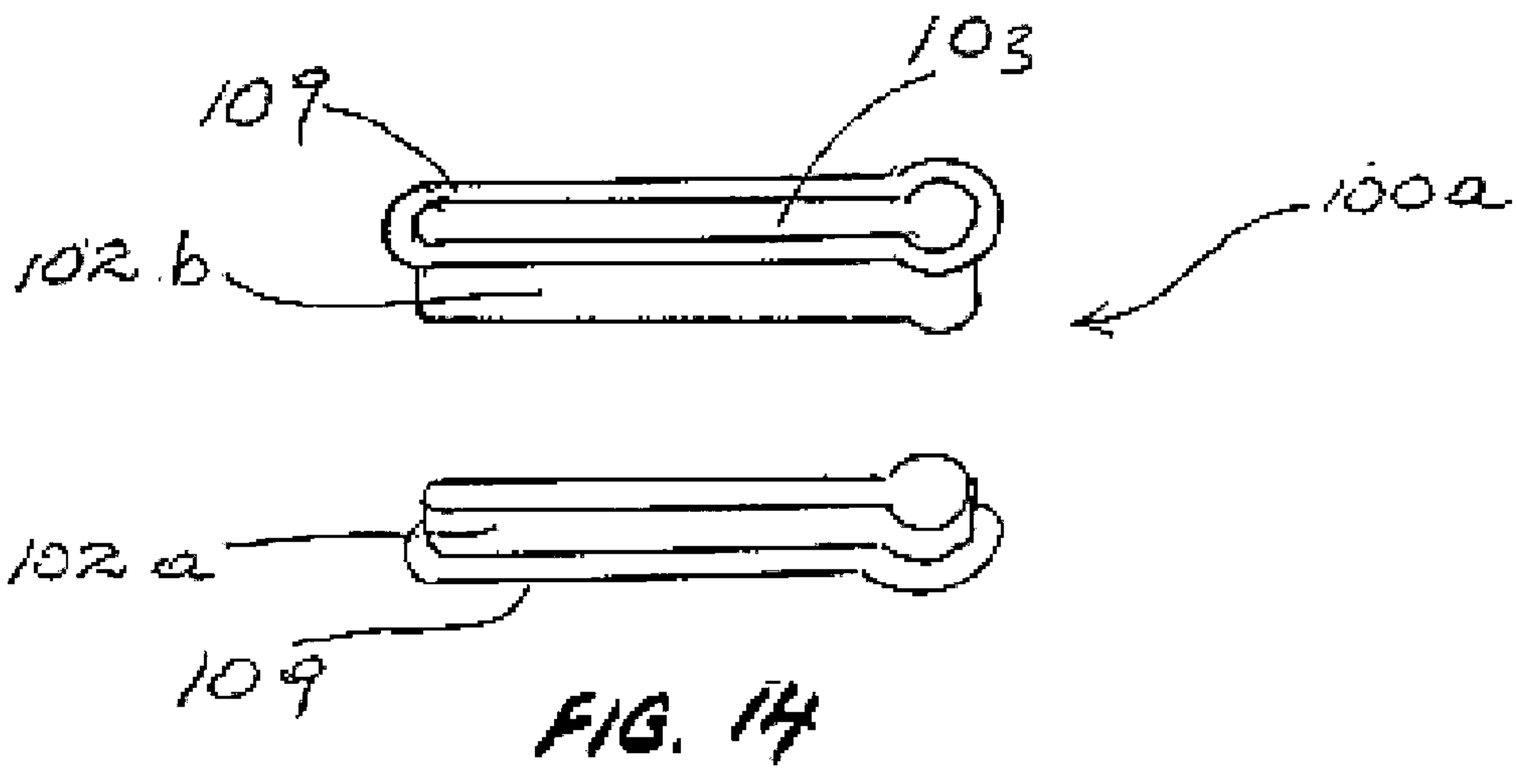

FIG. 14

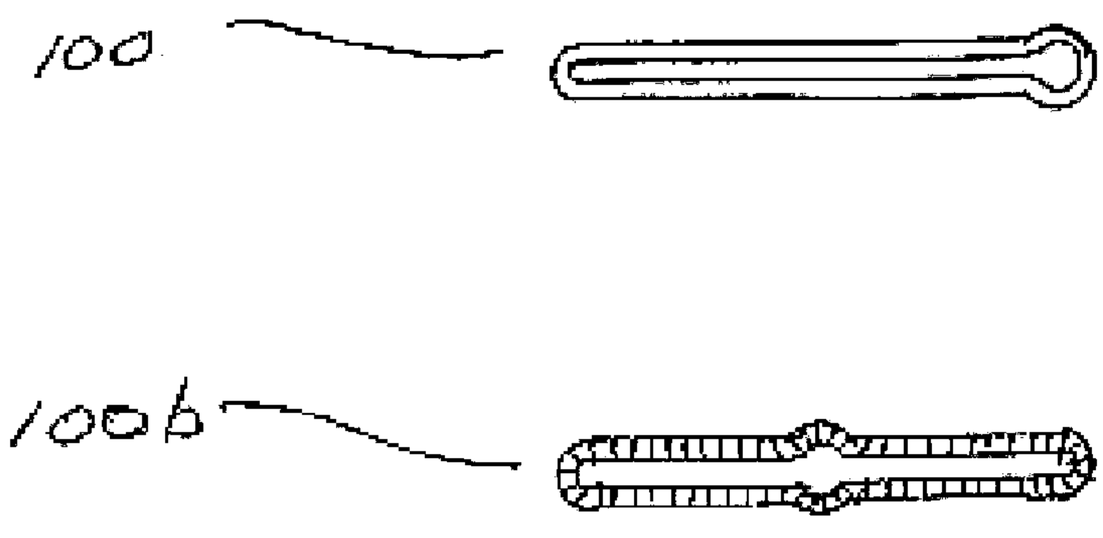

FIG. 15

BUTTON CARRIER/ADAPTOR ASSEMBLY AND DEVELOPED BUTTONHOLE

CROSS-REFERENCE TO RELATED APPLICATIONS

[0001] See Application Data Sheet.

STATEMENT REGARDING FEDERALLY SPONSORED RESEARCH OR DEVELOPMENT

[0002] Not applicable.

THE NAMES OF PARTIES TO A JOINT RESEARCH AGREEMENT

[0003] Not applicable.

INCORPORATION-BY-REFERENCE OF MATERIAL SUBMITTED ON A COMPACT DISC OR AS A TEXT FILE VIA THE OFFICE ELECTRONIC FILING SYSTEM (EFS-WEB)

[0004] Not applicable.

STATEMENT REGARDING PRIOR DISCLOSURES BY THE INVENTOR OR A JOINT INVENTOR

[0005] Not applicable.

BACKGROUND OF THE INVENTION

1. Field of the Invention

[0006] The present invention relates to a button adaptor assembly and an alternate developed buttonhole.

2. Description of Related Art Including Information Disclosed Under 37 CFR 1.97 and 37 CFR 1.98

[0007] The present invention is for the fashion industry and particularly relates to small sized (12-20 ligne or 7-13 mm) 'push-through' button applications, that is, buttons that require a buttonhole for fastening like the common shirt button. The invention is however not limited to these sizes of buttons and these applications.

[0008] Push-through buttons make up the largest button segment, being used on the most common types of garment, like shirts, blouses, polo tops and the like, that are sold in larger numbers compared to other garments, and tend to use many more buttons with as many buttonholes per item than other garment types. Practically all of these buttons and their buttonholes are sewn on and into the garments.

[0009] For too long, to the detriment of the industry, the industry has accepted sewing as the best means of attaching buttons. As a result, the process has also dictated the configuration of buttons with holes through the face which aided machine attachment on a large scale. As a result though, decorative faced (profiled) buttons lost out in large scale applications because of their awkward to handle rear-of-the-face attaching aspect, which is not easily adaptable to automation on a large scale. In the case of the buttonholes, parallel bartacks have been the dictate for the larger part, with more recent refinements including a keyhole profile at one end.

[0010] There is no doubt that sewing is the most effectual process for most garment-construction operations, despite its high inefficiency as a mass manufacturing process. For functions such as fitting ease, shaping, collar, cuff and pocket construction and attachment, the joining of fabric and findings sections, seaming effects and aesthetics, the trade-off between achieving those effects and paying for them with a certain level of inefficiency is an accepted status, largely because there is lack of an alternative process that can perform all of those functions.

[0011] There are however other aspects of garment manufacture, notably multiple repetitive applications like buttonholes and button attaching, where there are no special effects derived from the sewing process. The inefficiency of these operations, because of their multiple repetitions per garment, compound and do significantly impact the productivity and profitability of the garment manufacturing operation.

[0012] For a full appreciation of the adverse impact that sewing buttons on a shirt has on a manufacturing operation, consider these contributors and their impacts, then multiply them by the number of buttons on the garment, and double that to include sewing in the buttonholes:

[0013] the high non-value added work content in the threading of needles, winding of bobbins, replacing of thread stock, bobbins, and occasionally needles, trimming off run in and run out thread, the repeated re-positioning of the garment for each individual button or buttonhole location; all of these negatively impacting output.

[0014] the unavoidable down time created because most of the above indirect operations can only be done with the process stopped, which is the cause of reduced machine utilization, loss of capacity and added cost of production plus the added capital requirement for additional machines to make up the resultant loss of capacity; not to mention the cost of plant space required to accommodate them; added maintenance resource and added utilities costs to run them.

[0015] the inability to capitalize on the simultaneous execution of multiple like requirements for the product, an aim of most mass manufacturing operations, but not an option in sewing. To enable the simultaneous sewing of a garment set of buttons would require a gang set up of machine heads, which is not an impossible task. However individually, each machine head would suffer the events in (a) which are random, discrete, unpredictable and therefore cannot be coordinated or scheduled to happen in unison across the gang. Therefore such a setup is untenable because of the multiplying effect of any of these stoppages on each machine head rendering the entire gang inoperative at each such instance; the more the number of machine heads in the gang, the greater the potential number of stoppages. This in effect dictates the requirement of numbers of individual machines that fix a button at a time; the larger the number of buttons per garment the larger the number of machines required to maintain the garment output of the facility, a comparatively significant allocation of resource against those required for other operations of the garments construction.

[0016] Sewing also requires the added cost item of a finding or media in the form of thread that on occasion causes its own set of problems, both on the needle and the bobbin side. There is also the inherent waste of run in and run out thread between successive operations again on both needle and bobbin sides. Then there is the added inventory cost to accommodate the variety of colors that are called for to match the variety of fabric colors being manufactured.

[0017] Similarly in the case of buttonholes, there is no justification for sewing with all its waste and cost-plus encumbrances to be accepted as the means of construction. The sewing function does nothing more than seal the edges of the slits made in the fabric to engage the buttons, it does not enhance the buttonholes or create any other special effect as it does for other elements of garment construction. Buttonholes are also invariably a multiple requirement and because they cannot be done simultaneously with sewing, doing a garment set would account for being one of the longest operations.

[0018] All of the above have come about as the result of taking a cottage craft and making it fit a mass production template, where the mass production science has not been adaptable to sewing to make the process effective in minimizing the impact of or eliminating indirect functions to benchmark levels of efficiency for automation.

[0019] Conventional snap buttons are sew-free and do not require a button hole, but do not appeal as an attractive alternative for use on smart or formal wear. The snap button looks too industrial and since inception has not commanded a significant presence as a replacement for the common push-through button in the garment industry, instead mostly being relegated to use in applications where the buttons are hidden, rather than those that are displayed.

[0020] The present invention seeks to overcome or substantially ameliorate a number of the deficiencies of the prior art, or to at least provide an alternative.

[0021] It is to be understood that, if any prior art information is referred to herein, such reference does not constitute an admission that the information forms part of the common general knowledge in the art, in Australia or any other country.

BRIEF SUMMARY OF THE INVENTION

[0022] According to a first aspect, the present invention provides a button adaptor assembly comprising

[0023] an anchor section comprising a base and a protrusion extending from the base, the protrusion adapted to pierce through fabric and retain the anchor section to the fabric, and

[0024] a head section comprising an upper portion and a shank, the shank adapted to attach to the protrusion.

[0025] In one embodiment, the base is planar and comprises a flat lower surface.

[0026] In another embodiment, the base comprises at least one orientation edge.

[0027] In another embodiment, the protrusion has a profile comprising a generally teardrop shaped distal section mounted to the base by a proximal shaft.

[0028] In another embodiment, the distal section comprises a diverging cone section over an inverted hemisphere section.

[0029] In another embodiment, the distal section comprises a ballpoint tip.

[0030] In another embodiment, the anchor section and the head section comprise locking and orientation means therebetween.

[0031] In one embodiment, the orientation means comprises at least one spline in the anchor section engaged by at least one corresponding slit in the head section.

[0032] In one embodiment, the upper portion comprises a decorative upper face, which is preferably moulded in.

[0033] In another embodiment, the upper portion at least partially defines a button face to engage a buttonhole.

[0034] In another embodiment, the upper portion is configured as a mount portion for a decorative cap, the assembly further comprising a decorative cap for attachment to the mount portion. This configuration simplifies the tooling for the accommodation of a multiplicity of decorative faces to a common head moulding with a generic upper (mount) portion, a most probable arrangement for the buttons used for men's shirts.

[0035] In a variation of the previous embodiment, the upper portion is configured as a mount portion for decorative faced buttons, the assembly further comprising corresponding mating formations between a rear of the button face and the mount portion. This commonizes the configuration and thereby the mode of attachment for these button types.

[0036] In an alternative embodiment, the upper portion comprises a spherical seat for a toggle button to allow the button to tilt and swivel to engage a loop that serves as a buttonhole and swivel back for integrity of fastening. The spherical seat on an apexed shank presenting a fulcrum for a generous scope of flexibility to the toggle button.

[0037] In another embodiment, the upper portion and the decorative cap comprise orientation means therebetween.

[0038] In another embodiment, the upper portion of the adaptor and the decorative faced buttons modified for the new mode of attachment, comprise orientation means therebetween, besides and separate from or integrated into the mating provision.

[0039] In the embodiment with a spherical seat at the top of the shank, the freedom of tilt could be restricted to a chosen vertical plane by changing the shape of the seat and recess in the toggle button from a sphere to a cylinder on its side.

[0040] In another embodiment, the orientation means comprises at least one orientation pin in the upper portion to be received in a corresponding slot in the decorative cap.

[0041] In another embodiment, the orientation means in the upper portion of the adaptor for the decorative faced buttons comprises any of a variety of means most suitable to the material composition of the decorative faced buttons with the provisions in either part corresponding to effect a match in the desired orientation.

[0042] In the embodiment of paragraph [29] the choice of vertical plane of the desired tilt of the toggle button to be attached is determined by the correlation of the anchor orientation in paragraph [16] and the horizontal axis of the cylindrical seat.

[0043] In another embodiment, a lower surface of the upper portion comprises a machine assembly orientation formation.

[0044] In another embodiment, the locking means comprises an internal cavity in the shank of the head section which extends from an open bottom end thereof, the internal cavity having a profile corresponding to the profile of the protrusion of the anchor section.

[0045] In another embodiment, the internal cavity comprises a diverging end section adjacent the open end as a lead in for the protrusion.

[0046] In another embodiment, the shank comprises vertical slits cut therein to allow the shank to temporarily flare open to receive the protrusion.

[0047] In another embodiment, a bottom end of the shank acts as an annular thrust face in use to sandwich and retain the fabric adjacent to the base of the anchor section.

[0048] In another embodiment, the decorative cap comprises a decorative upper surface and a lower surface having attachment means for attachment to the upper portion of the head section.

[0049] In another embodiment, the decorative faced buttons comprise a decorative upper face and a lower surface having any of a variety of provisions most suitable to the material composition of the decorative faced buttons for attachment to the upper portion of the head section with the provisions in either part corresponding to effect a matched pairing of the two.

[0050] In another embodiment, an interchangeable decorative cap comprises a decorative upper surface and a lower surface having temporary attachment means for attachment to the upper portion of the head section.

[0051] In another embodiment, the button assembly further comprises toggle buttons having a part spherical recess hollowed out as the attachment means to the spherical seat of the head section.

[0052] In another embodiment, the attachment means comprises a recess dimensioned to receive and provide a permanent press fit with the upper portion.

[0053] In another embodiment, the attachment means comprises a customized insert set into the recess of the cap designed to engage and mesh with a matching upper portion, which can be disengaged and where a different decorative cap can be mounted to the upper portion.

[0054] In another embodiment, the decorative faced buttons attachment means comprise a mating provision, male or female, corresponding to the opposing provision on the upper surface of the head to effect attachment to it.

[0055] In another aspect, the present invention provides a buttonhole insert for covering the edges of a buttonhole slit in fabric, the buttonhole insert comprising: a generally loop shaped body dimensioned and shaped to extend along the internal periphery of the buttonhole slit, the body defining a central opening and adapted to attach to the fabric and cover the edges of the buttonhole slit.

[0056] In one embodiment, the body is shaped as an elongated looped band.

[0057] In another embodiment, the body comprises upper and lower peripheral flanges extending outwardly from upper and lower edges thereof.

[0058] In another embodiment, the body is of a material which changes form in assembly to enable the sealing of frayed buttonhole slits and adherence to the fabric.

[0059] In another embodiment, the buttonhole insert material is resilient.

[0060] In another embodiment, the buttonhole insert material is silicon rubber or resilient plastics material.

[0061] In another aspect, the present invention provides a method of developing the buttonhole insert of the above, the method comprising moulding the buttonhole insert in situ within a buttonhole slit, with material being dispensed in liquid or semi-liquid form directly onto the fabric and the buttonholes formed and moulded in process.

[0062] In another embodiment, the buttonhole is developed using silicon printing on both sides of the fabric with some of the silicon bled or smeared through the slit in the fabric which on curing effectively seals the frayed fabric within the slit

[0063] In another aspect the invention using silicon printing instead of developing a buttonhole develops a loop that has the portion of it that is used to snare the button (toggle buttons, frogs, and other such) clear and proud of the garment fabric, with the rest adhered to the fabric.

[0064] In another aspect, the present invention provides a button adaptor assembly comprising:

[0065] an anchor section comprising a base and a protrusion extending from the base, the protrusion comprising an end formation, and

[0066] a head section comprising a female recess component for receiving the end formation, the female recess being a mating opening having a radiused throat to enable a tilt action of the button face.

[0067] Preferably, the button adaptor assembly comprises a protruding pin extending through a centre of the throat.

[0068] Preferably, the anchor section comprises a spherical orb atop a short profiled hollowed stem having a height less than twice the diameter of the orb, the stem extending from a circular flanged base.

[0069] Preferably, the orb comprises an aperture extending from an apex opening thereof into the hollow stem that allows full penetration and some protrusion of the pin behind the head section.

[0070] Preferably, the anchor section is a two-piece assembly to enable attachment to the garment, the anchor section comprising an upper section to be disposed on the upper surface of the fabric and a pronged flanged anchoring unit that penetrates the fabric on the underside and pushes into the profiled hollowed stem of the upper section, the split in the prong being forced open into the wider top of the hollow by the protruding pin in the head section to secure all three components together and sandwich the fabric of the garment between the flanged bases of the two anchor section components

[0071] Other aspects of the invention are also disclosed.

BRIEF DESCRIPTION OF THE SEVERAL VIEWS OF THE DRAWINGS

[0072] Notwithstanding any other forms which may fall within the scope of the present invention, preferred embodiments of the present invention will now be described, by way of examples only, with reference to the accompanying drawings.

[0073] FIG. **1** is an elevation view of an anchor section of a button carrier assembly in accordance with a preferred embodiment of the present invention;

[0074] FIG. **2** is a top view of the anchor section of FIG. **1**;

[0075] FIG. **3** is a schematic bottom view of a head section for the button carrier assembly;

[0076] FIG. **4** is a part cross-sectional elevation view of the head section;

[0077] FIGS. **4***a* and **4***b* are part cross-section elevation views of modified upper (mount) portions of the head section with mating formations to locate and engage with corresponding formations on a rear surface of decorative faced (profiled) buttons or composite buttons such as fabric covered buttons, embossed pressed metal button assemblies, etc.

[0078] FIG. **4***c* is a part cross-section elevation view of another modified version of the upper (mount) portion of the head section, the upper portion comprising a spherical seat.

[0079] FIG. **5** is a bottom view of an example fixed decorative cap for the button assembly;

[0080] FIG. **6** is a part cross-sectional elevation view of the decorative cap of FIG. **5**;

[0081] FIG. **7** is a bottom view of a decorative cap with an annular insert formation that converts the decorative cap from a fixed to an interchangeable cap;

[0082] FIG. **8** is a cross-section elevation of the decorative cap of FIG. **7** showing a locationing and orientating provision for the annular insert.

[0083] FIG. **9** is a cross-section elevation of the annular insert for an interchangeable decorative cap.

[0084] FIG. **10** is an elevation of the head section of the button adaptor with the upper (mount) portion modified to engage and temporarily lock into a decorative cap that has been made interchangeable by the inclusion of an annular insert designed to enable easy changeover.

[0085] FIG. **11** is a top view of the head section of FIG. **10**.

[0086] FIG. **12** are top views of decorative cap examples for the button assembly;

[0087] FIG. **13** is a perspective view of a unitary construction buttonhole insert according to a first preferred embodiment;

[0088] FIG. **14** is a perspective view of a two-part construction buttonhole insert according to a second preferred embodiment;

[0089] FIG. **15** are top views of example profile finishes for the buttonhole inserts of FIG. **13** or **14** or examples of printed impressions of the form-in-situ options.

DETAILED DESCRIPTION OF THE INVENTION

[0090] It should be noted in the following description that like or the same reference numerals in different embodiments denote the same or similar features.

[0091] FIGS. **1** to **6** show the components of a button carrier/adaptor assembly **20** according to a preferred embodiment of the present invention, which comprises an anchor section **22**, to which is attached a head section **24**, and to which is attached a decorative cap **26**.

[0092] The decorative cap **26** is initially described as a separate removable and replaceable component. As described below however, the decorative portions of the cap **26** can be incorporated into the head section **24**, where pattern or profile can be simply moulded in integrally with the head section **24**. In such cases, the button carrier assembly **20** will comprise only the anchor section **22** and the head section **24**. Ease and costs of manufacture to accommodate a wide range of designs would tilt in favour of a multiplicity of caps **26** fitting a common button assembly **20**.

[0093] In effect, the decorative cap **26** is interchangeable with a variety of different types of buttons, decorative faced, composites and others currently with fixing provisions behind the button face. These, with suitable modification, dependent on material and construction, can be adapted to fit the head section **24**, which would also be modified to match and integrally seat these buttons. This adaptor feature establishes the versatility of the invention to present a common platform of attachment that until now has been the major divide in button types in determining suitability for use in mass garment production.

[0094] Referring initially to FIGS. **1** and **2**, The anchor section **22** comprises a planar base **30** having a lower surface **31** and an upper surface **32**. The lower surface **31** is generally flat and smooth. In plan view, the base **30** is shaped as a truncated circle with two parallel opposing chords **33** which are used for orientation of the base **30** in assembly. The chords **33** thus act as orientation edges.

[0095] The anchor section **22** further comprises a shaped protrusion **36** extending perpendicularly from a central portion of the upper surface **32**, which will form the core of the total assembly. From an elevation view, the protrusion **36** has a profile comprising a generally teardrop shaped distal section **38** which is mounted to the base **30** by a proximal shaft **40**. The distal section **38** comprises a small ballpoint tip **42** followed by a (diverging) cone section **44** over an inverted hemisphere section **46**. The shaft **40** comprises a cylindrical outer surface. Four splines **48** are disposed in a spaced manner at 90° intervals at the junction between the base **30** and the shaft **40**. Each spline **48** extends to about half the height of the shaft **40**.

[0096] Referring to FIGS. **3** and **4**, the head section **24** comprises an upper mount portion **50** and a hollow central shank **52**. The mount portion **50** is generally flat disc shaped, and comprises an upper surface **60** and a lower surface **62**. The lower surface **62** provides a lower button face, that is a flat portion that is pushed through the buttonhole in use.

[0097] A short round orientation pin **64** extends from a peripheral portion of the upper surface **60**. As shown in FIG. **3**, the head section **24** can be provided with the orientation pin **64** disposed at one of four possible locations (relative to the vertical axis in FIG. **3**), being at 90° orientation (**64**), 45° orientation (**64***a*), 0° orientation (**64***b*), or 60° orientation (**64***c*). The example orientation pin **64** shown in FIG. **3** is at the 90° orientation.

[0098] The lower surface **62** comprises a rectangular orientation formation **66**, the purpose of which is described below. Extending from the formation **66** (and perpendicularly to the mount portion **50**) is the shank **52**. The central shank **52** is partially hollow and comprises an internal cavity **71** which extends for at least three quarters of the length of the shank **52** from an open bottom end **72** thereof. The internal cavity **71** has an elevation profile which matches the profile of the shaped protrusion **36** of the anchor section **22**, with an end section **74** thereof adjacent the open end **72** being chamfered to provide a tapered lead-in for the protrusion **36**.

[0099] The body of the shank **70** comprises four vertical slits **76** cut therein at 90° intervals peripherally, as in a collet. The slits **76** extend from bottom end **72** to adjacent the formation **66**.

[0100] Referring to FIGS. **5** and **6**, the decorative cap **26** comprises a generally disc shaped body **80** having an upper surface **82** and a lower surface **84**. The cap **26** will be the decorative visible portion of the button assembly **20**. As such, the body **80** can be shaped as desired (hexagon shown in the example) and the upper surface **82** can be provided with any desired design or form of artistic expression the designer contemplates, different examples of which are shown in FIG. **12**. The lower surface **84** comprises a recess **86** with a round orientating pin slot **88** corresponding to the orientation pin **64** of the mount portion **50**. The recess **86** and pin slot **88** are dimensioned to receive and provide a press fit with the mount portion **50** and the orientation pin **64** respectively that ensures an integrated permanent union therebetween. Where the decorative cap **26** is not of a mouldable material, it can be attached to the mount portion **50** of the head section **24** by any of a number of other

different methods or mechanisms of mating and/or locking more appropriate for the application, including an adhesive.

[0101] In assembly, the ballpoint tip **42** of the anchor section **22** penetrates the fabric, and allows the teardrop shaped distal section **38** to extend through the formed opening and protrude above the fabric. The teardrop shaped distal section **38** initially acts as a stop for the fabric (a retaining means) from slipping back off the protrusion **36** before the head section **24** is fixed to the anchor section **22**. The planar base **30** is at least as wide as the mount portion **50** of the head section **24**. The base **30** provides a wide enough surface behind the fabric so that any strain does not pull it upward through the fabric. The stable base **30** enables effective vertical axial force required in the assembly processes.

[0102] The head section **24** is then lowered over the anchor section **22**, with the shaped protrusion **36** being inserted and received in the internal cavity **71** of the central shank **52**. The slits **76** enable the shank **52** to flare open over the wider sections of the protrusion **36**. As described above, the profile shape of the internal cavity **71** matches that of the shaped protrusion **36**. When the mating of these two is complete, the lead-in end section **74** snaps back to close around the shaft **40** of the protrusion **36**. This acts as part of the locking mechanism for the assembly. The four slits **76** lock into the respective four splines **48** at the base **30**, enabling positive relative orientation between the anchor section **22** and the head section **24**. At this stage, the head section **24** cannot advance further or rotate about its axis, and the annular leading edge (bottom end **72**) of the shank acts as an annular thrust face to sandwich and retain the fabric adjacent to the base **30** of the anchor section **22**. In this manner, the button face is spaced from the fabric in use enabling ease of buttoning up the garment. The fabric is sandwiched between the two, securing the button to the garment. The shank also serves to accommodate the multi layered fabric of the garment's button placket and the top and bottom thicknesses of the developed buttonholes.

[0103] The decorative cap **26** is ideally mounted (assembled) to the mount portion **50** of the head section **24** before the head section **24** is mounted to the anchor section **22**. The rectangular orientation formation **66** presents two separate orientation options with differing lengths that can be used when presenting the head section **24** in an assembly machine. In other words, the head section **24** can be oriented as shown in FIG. **3**, or the mount portion **50** can be rotated 90° which will dispose the orientation pin **64** at a different location. These two possible orientations of the mount portion **54**, together with the four possible orientation pin **64** location options described above, provides eight possible locations for the orientation pin **64** at the designer's disposal for orienting a decorative cap.

[0104] The decorative face or cap provides the face of the button with an added element of the designers array, a visible embellishment or a focal point of the garment; the other parts (anchor section **22** and head section **24**) are its carriers. The carriers have mode of fixation, integrity of purpose, orientation and other functional considerations designed in to fulfil the technical requirements of the assembly.

[0105] FIGS. **4***a* to **4***c* show possible modifications to the upper surface **60** of the head section **24** and the method of mounting decorative faced (profiled) or composite buttons. The upper surface **60**, in addition to or instead of orientation pin **64**, will include a mating formation feature. An example as shown in FIG. **4***a* is a male formation **63***a* which is a protrusion moulded into the upper surface **60**. FIG. **4***b* shows a female formation **63***b* being a recess formed in the upper surface **60** of the head section **24**. These formations will correspond to an opposing corresponding formation in the rear surface of a modified button to provide an integrated head assembly.

[0106] The above examples are based on the simple principle of a slotted male protrusion that is compressed in the action of passing through a constricted opening into a larger recess into which it expands to its restored original shape. Any of a number of tried and tested mechanisms to locate, orientate and fix alternative button faces to the head section can be incorporated into the mount portion of the head section to in effect adapt them to a common head assembly for simple attachment to the garment.

[0107] FIG. **4***c* shows another example where the mount portion **50** is provided with a spherical seat **51** meant for a matching mating recess in a button body, where the type of button requires an ability to tilt and swivel on a fulcrum to engage its opposite fastening element, usually a loop. This arrangement is to accommodate buttons, like a toggle button, that have to tilt and swivel to engage a loop that serves as a buttonhole and swivel back for integrity of fastening.

[0108] The option of an interchangeable decorative cap is shown in FIGS. **7** to **11**. FIG. **7** presents in bottom view the provision of a profiled annular insert **28**, fitted into the recessed underside **86** of the decorative cap **26**. The insert **28** is located and orientated by means of a pin **94** of the insert **28** and matching pin recess **88** in the cap **26**. The profile of the insert **28** is configured in the provision of lugs **93** extending inwards from its peripheral annulus at two levels. Three of these lugs **93** extend out from adjacent the top surface of the annulus for half its depth, the fourth lug **93***a* extends from adjacent the bottom surface of the annulus at the lower half of the depth but it has a raised stop at one end of the lug **93***a* that extends to upper half in line with the upper lugs **93**. All these lugs represent octant segments of the annulus extending inwards from the peripheral annulus of the insert **28** with a void of one octant between them. FIG. **9** shows a sectioned annulus in its upside down position which is the aspect it is assembled in to the decorative cap shown sectioned in FIG. **8**. These lugs **93** and **93***a* include a trough indent **95** on the undersides of **93**, on the top surface of **93***a*.

[0109] FIGS. **10** and **11** show the modified head section **24** of the button assembly that will mesh with the insert **28** in the interchangeable cap **26**. In effect, the standard upper section disc of the head section **24** is first reduced to a diameter 1 mm less than the internal diameter of the peripheral ring of the insert **28**. Then at two half layers for an outer annulus, the width of the lugs of the insert, the upper section is notched out to end up with equi-spaced lugs **63** and **63***a*, a little smaller than exact octants. Here again at the upper level three consecutive alternating lugs **63** are retained, with all others removed and at the lower level at a position coinciding with the fourth consecutive alternating lug, the lug **63***a* on its own is retained at that level with all others removed. In top view we have in effect a Maltese cross with one dropped lug. Each of these lugs are peak indented **65** on their external faces.

[0110] The mating and meshing of the modified button assembly head and interchangeable decorative cap is simply

the lining up of the cross of the head with the like shaped void in the insert of the cap, lowering to full depth and turning ⅛ rotation to the stop on **93***a*, whence the indents **65** and **95** should align and engage. To change caps simply twist off in the counter direction.

[0111] The offset lug with the stop has two functions; it provides a point of fixed relativity between the two parts enabling fixed orientation and the stop acts to not only positively engage the parts on assembly, but also enables easy removal in disassembly by stopping the counter rotation of the head past the point where the lugs of the head clear the lugs of the insert lining up with the void.

[0112] The preferred design of the elements of the anchor section **22** address different functions of the assembly:

[0113] a) For integrity of fix there had to be a part of the assembly on either side of the fabric, requiring penetration of the fabric by at least one of the parts,

[0114] b) The penetrating part, the protrusion is preferably solid rather than hollow. The profile of the teardrop shaped distal section **38** with the three segments described above had these main considerations; penetrating with the ball point tip **42** by parting fabric threads rather than shearing, further parting the opening with the cone section **44**, the hemispherical section **46** allowing the fabric to finally close around the shaft **40** of the protrusion, which is marginally thicker than the ball point tip, with the shearing top edges of the splines **48** poised to embed in the slots **76** of the shank **52** of the head section **24**.

[0115] c) The provision of a protuberance (inverted hemisphere section **46**) as a locking mechanism needed to act not only to positively engage the mating parts but also to act to prevent further travel axially either way.

[0116] d) The cone profile (cone section **44**) also facilitates the smooth flaring opening of the head section shank **52** and the hemisphere (section **46**) enables the closing or the spring back of the shank **52** locking it in place axially;

[0117] e) the splines **48** on the bottom of the protrusion **36** when engaged in the vertical slits **76** of the head **24** section prevent rotation of the head section **24** with respect to the anchor section **22**, ensuring proper orientation when assembled.

[0118] In designing the preferred elements of the head section **24**, the following requirements were considered;

[0119] a) providing a snap fit onto the anchor section **22** that consolidated the central shank **52**/protrusion **36** into a robust enough assembly that could withstand the recurring axial and lateral forces exerted when buttoning and unbuttoning and the instances where the garment was tight fitting;

[0120] b) there was a requirement to sandwich the fabric firmly between these two parts and spread the area of any strain on the fabric away from the point of penetration, which the annular thrust face (annular bottom end **72**) provides;

[0121] c) once assembled, there could not be any further movement between parts along or around the axis. Movement along the axis (backwards) would mean that there is no integral assembly and rotational movement around the axis would mean a loss of orientation, which would affect the presentation of the decorative cap **26** where it mattered.

[0122] The preferred embodiment follows similar thinking of sandwiching the fabric between a foot and a head, but with more of a gentle action that matches the duty of the buttons and the light weight fabrics used for these garments. In lieu of malleable metals that were used in earlier designs of sew-free buttons, an injection moulded plastic is considered for this button design, not dissimilar to the type used to make household garden irrigation kits, with simple designed mating parts that snap one into the other using a force similar to thumb pressure. There is little or no permanent deformation of constituent parts to effect the assembly of this unit as in the case of a number of other sew-free button inventions.

[0123] The foot of the unit provides the base that includes a penetrative stalk or staff profiled in such a way that in the process of assembly it helps open up the hollow shaft of the mating upper body or head enough to imbed itself in a matched recess within it, after which the shaft closes back around the staff self-locking the two parts together, and sandwiching the garment between them to hold the button assembly in place. It is simple, neat and effective and does not require excess force to attach these buttons. Besides the actual handling and delivery of the buttons, which can easily be achieved with existing technology for the handling of small parts, the assembly machinery would consist of a simple press that fixed all the buttons in a single cycle and buttoned up the shirt at the same time.

[0124] The head can either have its own stylized button face designed into the moulding and create a whole new range of stylized shirt buttons, or present as a completely different embodiment of an adaptor/carrier for other buttons of more sophisticated designs, with decorative facades or made of other materials or even composites. As an adaptor/carrier, the head would have a locating and fitting provision moulded into a plain face to engage the rear surface of the facade bearer making them easy fit buttons too. This adaptor/carrier functionality on its own would provide significant advantages to the button industry. It would provide a common easy fixing mode for all types of buttons to garments. Since the institution of the art, the mode of fixing has been the major divide in determining which buttons were suitable for mass production, with the others restricted to smaller niche markets invariably requiring special purpose machines or hand sewing. This opens up the market by providing a universal conversion platform for practically any button that was previously not easy to attach.

[0125] The preferred embodiment has provided a button with its most impressionable feature—an unencumbered face and in so doing has necessitated the need to establish within the design a means of ensuring that aspect of presentation (orientation) if desired can be predetermined, accommodated and maintained. To enable a number of parts to be assembled so as to present in a particular aspect requires a means of relativity to be established between parts and a means of locking them in place and attaching them as an assembly in the desired aspect. The two parts that come together to attach the button body (anchor and head) to the garment have this provision designed in. In the case of a decorative cap that needs to be attached to an adaptor/carrier assembly, a selection of orientation provisions has been designed in for a good spread of choices. In the case of decorative buttons modified for this new easier method of attachment to the garment, corresponding mating provision (formations) in the head of the adaptor would be a function of the material of the button with the male/female provision decided by ease of manufacture/modification to the button part. The head of the adaptor could be designed to have either male or female provision and include orientation if necessary. All these design flexibility considerations have

been configured for recognition in automated systems by which they will be assembled.

[0126] Other embodiments of the present invention are possible, including a design variant that provides for the mating parts to be disassembled just as easily, creating a removable/changeable button, (this is distinct from just an interchangeable decorative cap, where the button body remains fixed to the garment) which can be used in place of cufflinks or on women's blouses where they can be changed for different effect or to match accessories or just removed to protect them from harsh laundering, an important consideration for uniforms. A further possible variant provides a means for anchoring or attaching other things to, such as chains or an alternative lacing notched, hooped or eyelet provision or any other attachment or appurtenance that has its means of attachment so configured.

[0127] The button design of the preferred embodiment comprises an assembly of two functional parts and the third the decorative face. Essentially the two functional elements fit one into the other, with the bottom piece penetrating the fabric layers, the top piece then fits over this protrusion and locks in place sandwiching the fabric between the two components. The decorative face has been designed in as a separate element to provide the most versatile arrangement to the designer, whose only interest is what the button looks like, its function assumed. In designing the button this way, any type of button face, of any material, shape or form can be attached to the top functional piece of the assembly either by making use of the locating pin option or any of a number of different ways using the button face (mount portion) of the head as the platform off which other attaching provisions can be incorporated.

[0128] The preferred design lends itself to an injection moulding process for manufacture and the functional components would ideally be made of plastic. The decorative face however could be of the same or any other material including exotics like bone, glass, stone, wood, bamboo, coconut shell or even composites.

[0129] This button design thus provides an effective alternative means for fixing a button face to the fabric, eliminating the sewing requirement for this operation entirely. The button face had to have the maximum flexibility in enabling as unrestricted as possible a level of freedom of expression in the design of the decorative display (done by others). Fixation methodology had to not contribute to early failure modes in use; it also had to have purpose-designed elements in the constituent parts that aided assembly and contributed to the integrity of the whole in use. Simplicity of operation in the assembly process that would enable multiple assemblies to be done simultaneously, with 'one-shot' button assembly for each garment made possible, achieving efficiencies of scale far superior to sewing for this operation. Simplicity of assembly mode that would contribute to a commensurate level of simplicity in the design, set up and operation of the machinery required in mass production.

[0130] The preferred button design proposed comprises an assembly of three parts, the first two providing the functional requirement and a common adaptive base for the widest range of button types to be mounted on, making it the closest to a universal button mount that presents a common mode of attachment for all buttons so adapted. The third part is the aesthetic, decorative, artistic element that could be moulded in to the head section directly and not require a separate part. It has been considered separately though to provide for a wider range of design configurations exhibiting the versatility of the product.

[0131] The buttonhole insert aspect of the present invention will now be described with reference to FIGS. **13** to **15**.

[0132] FIG. **13** shows a buttonhole insert **100** according to a first preferred embodiment. The buttonhole insert **100** comprises a unitary construction body **102** which is shaped generally as an elongated looped band, forming a central slit opening **103**. The body **102** comprises longer parallel sides **104** joined at their ends by first and second curved sections **106** and **108**. The second curved section **108** is enlarged compared to the first curved section **106** providing a keyhole shape to the buttonhole insert **100** The buttonhole insert **100** further comprises upper and lower peripheral flanges **109** extending outwardly from upper and lower edges thereof.

[0133] FIG. **14** shows a buttonhole insert **100***a* which is similar to the buttonhole insert **100** above, but which is formed as a two-part assembly. The body **102** in this embodiment is essentially divided latitudinally, with a lower body portion **102***a* fitting into an upper body portion **102***b*. The body portions **102***a* and **102***b* will be inserted from back and front of the fabric to fit one into the other for the same effect as the single part unit.

[0134] The buttonhole inserts will be placed into the formed buttonhole slits in the fabric, and would then be made to adhere to the fabric and be finished to present attractively.

[0135] The material used to construct the buttonhole inserts **100** and **100***a* will be precast either as a single part or as a 2-part assembly as above. In both cases, the material would require that these buttonhole inserts change form to enable the sealing of frayed buttonhole openings, adherence to the fabric of the garments, the welding of parts in the 2-part configuration and the finishing of the buttonhole in its final decorative and functional form. The formed buttonhole material is also resilient to allow temporary deformation in use when a button in inserted therethrough, with the buttonhole insert returning to its shape thereafter. The material will withstand regular laundering, the high temperature of an electric iron and reasonable wear and tear that can outlast the garment. The material is preferably mouldable with moulding characteristics that are free flowing, take on relatively thin cross-sections and tightly radiussed corners that fit into the ends of a typical buttonhole slit. The flanges could either be reconstituted or embossed with decorative patterns.

[0136] Suitable materials for the buttonhole insert include silicon rubber and resilient plastics material. A compatible chemical (adhesives, modifiers) and or physical (heat, pressure) means may be used to assist in bonding the buttonhole inserts with the fabric and sealing the frayed edges of the slits

[0137] An alternative to precast buttonhole inserts is to mould the buttonhole insert in situ, with the material being dispensed in liquid/semi-liquid form directly onto the garment and the buttonholes formed and moulded in process.

[0138] Silicon printing is another method of developing buttonholes in situ, where profiled imprints of the buttonhole shown in FIG. **15** are printed on either side of the fabric with part of the material being bled through the slit in the fabric to bind and seal, frayed edges.

[0139] The buttonhole insert for these lightweight garments require slits of between 10-15 mm in the fabric layers to be sealed, they need to contain the fraying and arrest any

further yielding of the fabric along the slits, and presenting a continuous robust surround for these openings which are required to withstand the rigours of the duty they will be subjected to in holding two ends of the garment together with buttons and buttonholes and they will be required to not easily fail as a result.

[0140] The buttonhole surround on the top surface needs to be well presented and the mould for this area can be detailed to give it any of a number of textured effects, as shown in FIG. **15**. FIG. **15** also shows examples of possible profile shapes for the buttonhole inserts, including a conventional keyhole (**100**), a central keyhole (**100***b*), crescent shape (**100***c*) and diamond shape keyhole (**100***d*). The bottom surround surface can mirror the top mould or just be flattened. The classification of the garment may determine the finish required for both surfaces. The shape of the openings (slits) can be customized as desired and can accommodate inclusions that are moulded in for decorative, structural or add-on features. Eg The lapel buttonhole in a jacket can be a diamond shaped hole extending on the rear side into a clear-of-the-fabric loop that the stem of the buttonhole (flower) is held in place with eliminating the need for pins to do the job.

[0141] This aspect of the invention has been created as an adjunct to the above sew-free button invention for the total solution of a simple, effective, versatile alternative to sewing which currently is the unchallenged albeit inefficient and unprofitable process for both these essential elements of light weight garments. Foreseeable modifications to the bases of these designs can as effectively address the buttons and buttonholes for other classification of garments.

[0142] Because of the vagaries of the art and configuration of the means as we have shown in the case of sewn on buttons, the sewing process has dictated the limitations of what it will accept and what it can produce in a mass production environment. In the case of buttonholes, they are easiest to do in repetitive numbers if parallel to the garment edge and as parallel bartacks. If they were required at any angle to the edge, or of any other configuration, it would slow the process down or qualify it for special application consideration to be performed on some other special purpose machine. This invention enables the orientation or configuration to be of choice by minor changeover to the machinery setup.

[0143] Consider the motor skills required to button/unbutton a shirt, which users have down to an automatic memory function that has them contort their fingers and flex their wrists in a combination of movements that effect the action. Now consider the situation where because of injury one has lost some of the normal capability, making that seemingly easy function a totally new skill to develop. As a designer that had to come up with a design that helped the reduced capability, an easier combination of fewer movements and presentation of the two elements in button and buttonhole to enable the action I would consider an oval button fixed at a slant, say 40 to 45 degrees to the edge of the shirt with the leading button end at the lower end of the slant and a crescent shaped buttonhole at an opposing angle (−40 to −45 degrees) on the other shirt edge. The crescent shape would enable an easier separation of the buttonhole edges and the opposing angles of button to buttonhole would present in a more conducive combination to make the unbuttoning/buttoning function much simpler and easier to execute. This example whilst a remote and unique application is offered as an appreciation of what this invention can accommodate as a matter of just another configuration that a mere template change in the process would enable. So a designer's creativity is no more hampered by the limitations of the manufacturing process in this application; they may not even want a buttonhole for a button, it could be for completely a different purpose, such as a decorative embellishment or another functional application like a holder or retainer for a number of things to be carried (eg. pen, keys, flashlight) or displayed (eg. name tags, security passes)

[0144] Ideally this buttonholing operation would be processed just prior to the buttons being attached to the garment so that the button attaching and the buttoning up of the garment could be achieved in a single action. This is a significant bonus in the presentation requirement for packaging, ie. buttoning up of the garment that can effectively be done at the same instance.

[0145] There are also benefits to the garment user; replacing buttons will no longer require the search for a needle and the right colour of thread. Buttons coming loose due to worn or unravelling thread will be a thing of the past.

[0146] Whilst preferred embodiments of the present invention have been described, it will be apparent to skilled persons that modifications can be made to the embodiments described.

[0147] The provisions for locating, orientating, mating, meshing and locking complementary parts of the button adaptor assembly are generic, they can be interchangeably designed in to suit the combination of parts and depend on the variables in each application. Simplicity in the design of the constituent parts and the processes to assemble them are the underlying philosophy.

[0148] There will be variations to accommodate different requirements and these may need to include customized additions. For example; finer and more open-weave fabrics would need a wider sandwiching area than the foot of the shank around the base of the anchor shaft. This could be provided by an annulus with a spiked bottom surface that is slid over the protrusion of the anchor locating on the splines of the shaft. The assembly of the head section to the anchor would in contacting this annulus effectively increase the area sandwiched between head and anchor by the whole surface area of the annulus beyond the foot of the shank, with the spikes holding onto this larger area of the fabric taking any strain away from the central point of penetration of the anchor in the fabric, minimizing failure of the button attachment and rupturing of the fabric in these more delicate applications.

[0149] For example, whilst they can be less preferred, the protrusion in the anchor section can be shaped in other forms such as a pyramid, cone, or diamond. The internal cavity in the shank will then be shaped accordingly.

[0150] The lower section of the protrusion (the inverted hemisphere section) can also include additional retaining means, such as spike formations for engaging the fabric.

[0151] The head section can also include more than one orientation pin, or an orientation shaped in a different manner.

[0152] In one embodiment, the upper portion is configured as a mount portion for a removable decorative cap, the assembly further comprising a decorative cap for attachment to and removal from the mount portion.

[0153] In one embodiment, the upper portion is configured as a mount portion for decorative faced (profiled) buttons,

the assembly further comprising a modified adaptive mating provision where previously existed a rear-of-the-button-face attaching provision for attachment to a modified mount portion.

[0154] In one embodiment, the upper portion does not define any part of the button face, the upper portion of the shank is replaced with a spherical seat. This arrangement is to accommodate buttons, like a toggle button, that have to tilt and swivel to engage a loop that serves as a buttonhole and swivel back for integrity of fastening. The assembly further comprising a matching mating recess in the toggle button body.

[0155] In one embodiment, the upper portion and the decorative cap comprise orientation means therebetween.

[0156] In one embodiment, the orientation means comprises at least one orientation pin in the upper portion to be received in a corresponding slot in the decorative cap.

[0157] In one embodiment, the orientation means comprises an orientation pin in the annulus corresponding to a slot in the decorative cap sets the relative positioning of this cap assembly. With the design of the button head and the annulus, where 4 lugs in each mesh with each other to effect the union of parts, there had to be provision that ensured fixed relativity between the two, which was made possible by one of the four lugs in both parts being alternatively disposed to the others; add to it a stop on one of these and the two parts can only come together in one peripheral location and mesh with rotation in one direction, in turn establishing the predictive disposition of decorative cap with respect to the head.

[0158] In one embodiment, the upper portion of the adaptor and the modified decorative faced buttons requiring the new mode of attachment, comprise orientation means therebetween, besides and separate from or integrated into the mating provision.

[0159] In one embodiment, the freedom of tilt could be restricted in a chosen vertical plane by changing the shape of the seat and recess in the toggle button from a sphere to a cylinder on its side, which in effect eliminates two axes of flexure. The orientation of this restricted axis of movement can be set by the correlation of the anchor base and the shank of the head.

[0160] In one embodiment, a lower surface of the upper portion comprises a machine assembly orientation formation.

[0161] In one embodiment, the locking means comprises an internal cavity in the shank which extends from an open bottom end thereof, the internal cavity having a profile corresponding to the profile of the protrusion.

[0162] In one embodiment, the internal cavity comprises a diverging end section adjacent the open end.

[0163] In one embodiment, the shank comprises vertical slits cut therein to allow the shank to temporarily expand to receive the protrusion.

[0164] In one embodiment, a bottom end of the shank acts as an annular thrust face in use to sandwich and retain the fabric adjacent to the base of the anchor section.

[0165] In one embodiment, the decorative cap comprises a decorative upper surface and a lower surface having attachment means for attachment to the upper portion of the head section.

[0166] In one embodiment, the interchangeable decorative cap comprises a decorative upper surface and a lower surface having temporary attachment means for attachment to the upper portion of the head section.

[0167] In one embodiment, the decorative faced (profiled) buttons, composite buttons and the like with their modified adaptive mating provision at the rear face is the attachment means for attachment to a modified upper portion of the head section.

[0168] In one embodiment, the toggle buttons have a part spherical recess hollowed out as the attachment means to the spherical seat of the head section

[0169] In one embodiment, the attachment means comprises a recess dimensioned to receive and provide a fixed press fit with the upper portion.

[0170] In one embodiment, the attachment means comprises a customized insert set into the recess of the caps underside designed to engage and mesh with a modified matching upper portion that can then also be disengaged and changed over at will for a different decorative cap.

[0171] In one embodiment, the modified, mating attachment means of the decorative button portion engages a modified matching upper portion of the head that provides an opposing, corresponding mating provision. The nature, form and integrity of the mating provision, male or female being determined by the material and construction of the buttons being mounted.

[0172] In one embodiment, the hollowed out part spherical recess is pressed over a slotted spherical seat of the head section, that compresses to slide into the recess opening into it to engage the toggle button. The spherical seat on an apexed shank acting as a fulcrum and allowing a generous envelope of movement for the toggle button.

[0173] A further method of developing the buttonhole is using silicon printing on both sides of the fabric with some of the silicon bled through the slit in the fabric which on curing effectively seals the frayed fabric within the slit.

[0174] Both methods lend themselves to developing loops clear and proud of the garments, coming off segments that are adhered to the fabric, to act as buttoning elements in lieu of button holes, such as are used to fasten frogs and toggle buttons. Another application that comes to mind is a succession of loops used to fasten a string of closely attached buttons, usually small and spherical, like pearl beads or a fabric covered variety that are typically used on the bodices of gowns, bridal wear and blouses made in exotic silks, brocades or lace.

[0175] There are likely to be other applications, decorative and or structural, for not just garments but other apparel, in fact all other applications where fabric is used, requiring fastenings, openings to be lined and sealed, attachments to be provided and even for artistic embellishment as a quicker, more robust alternative to embroidery.

[0176] The button adaptor assembly can also be presented in a shankless configuration wherein the head section in lieu of a hollowed out shank comprises a button face backing akin to a press button female component with the mating opening having a radiused throat to enable a tilt action of the button face on a simplified protrusion of the anchor section. It also comprises a protruding pin through the centre of the throat.

[0177] The anchor section can also comprise a simple shorter protrusion of a spherical orb atop a short profiled hollowed stem not more than twice the diameter of the orb in height that sits on a circular flanged base. The head and anchor are assembled by force fit with the diameters of orb

and throat of the female button face backing sized to enable an integral union accordingly. The orb has a hole through it from its apex opening into the hollow below that allows full penetration and some protrusion of the pin behind the button face of the head section.

[0178] The anchor section in this embodiment is a 2-piece assembly to enable attachment to the garment. The upper section of this assembly outlined above sits on the upper surface of the fabric and is attached to the garment by a counterpart split single pronged flanged anchoring unit that penetrates the fabric on the underside pushes up the profiled hollowed stem of the upper section and the split in the prong is forced open into the wider top of the hollow by the protruding pin in the head section to secure all 3 components together and sandwich the fabric of the garment between the flanged bases of the two anchor components.

1. A button adaptor assembly, comprising:

an anchor section comprising a base and a protrusion extending from the base, the protrusion piercing through fabric and retain the anchor section to the fabric, and

a head section comprising an upper portion and a shank, the shank being attached to the protrusion.

2. (canceled)

3. The button adaptor assembly of claim **1**, wherein the base comprises at least one orientation edge.

4. The button adaptor assembly of claim **1**, wherein the protrusion has a profile comprising a teardrop shaped distal section mounted to the base by a proximal shaft, wherein the distal section comprises a diverging cone section over an inverted hemisphere section.

5. (canceled)

6. The button adaptor assembly of claim **4**, wherein the distal section comprises a ballpoint tip,

wherein the anchor section and the head section comprise locking and orientation means therebetween, and

wherein the orientation means comprises at least one spline in the anchor section engaged by a corresponding at least one slit in the head section.

7-9. (canceled)

10. The button adaptor assembly of claim **1**, wherein the upper portion is configured as a mount portion for a decorative cap, the assembly further comprising a decorative cap for attachment to the mount portion, and wherein the decorative cap is removable.

11. (canceled)

12. The button adaptor assembly of claim **1**, wherein the upper portion is configured as a mount portion for decorative button face, the assembly further comprising corresponding mating formations between the rear of the button face and the mount portion.

13. The button adaptor assembly of claim **1**, wherein the upper portion comprises a spherical seat for a toggle button to allow the button to tilt and swivel to engage a loop that serves as a buttonhole and swivel back for integrity of fastening.

14. The button assembly of claim **10**, wherein the upper portion and the decorative cap comprise orientation means therebetween, wherein the orientation means comprises at least one orientation pin in the upper portion to be received in a corresponding slot in the decorative cap.

15. (canceled)

16. The button assembly of claim **1**, wherein a lower surface of the upper portion comprises a machine assembly orientation formation.

17. The button assembly of claim **6**, wherein the locking means comprises an internal cavity in the shank of the head section which extends from an open bottom end thereof, the internal cavity having a profile corresponding to the profile of the protrusion of the anchor section.

18-19. (canceled)

20. The button assembly of claim **1**, wherein a bottom end of the shank acts as an annular thrust face in use to sandwich and retain the fabric adjacent to the base of the anchor section.

21. The button assembly of claim **16**, wherein the decorative cap comprises a decorative upper surface and a lower surface having attachment means for attachment to the upper portion of the head section, and wherein the attachment means comprises a recess dimensioned to receive and provide a fixed press fit with the upper portion.

22. (canceled)

23. The button assembly of claim **13**, further comprising toggle buttons having a part spherical recess hollowed out as the attachment means to the spherical seat of the head section.

24. (canceled)

25. The button assembly of claim **10**, wherein the decorative cap comprises a decorative upper surface and a lower surface having temporary attachment means for attachment to the upper portion of the head section, wherein the attachment means comprises a customized insert set into the recess of the cap designed to engage and mesh with a matching upper portion, which can be disengaged and where a different decorative cap can be mounted to the upper portion.

26-34. (canceled)

35. A button adaptor assembly, comprising:

an anchor section comprising a base and a protrusion extending from the base, the protrusion comprising an end formation; and

a head section comprising a female recess component for receiving the end formation, the female recess being a mating opening having a radiused throat to enable a tilt action of the button face.

36. The button adaptor assembly of claim **35**, comprising a protruding pin extending through a centre of the throat.

37. The button adaptor assembly of claim **35**, wherein the anchor section comprises a spherical orb atop a short profiled hollowed stem having a height less than twice the diameter of the orb, the stem extending from a circular flanged base.

38. The button adaptor assembly of claim **37**, wherein the orb comprises an aperture extending from an apex opening thereof into the hollow stem that allows full penetration and some protrusion of the pin behind the head section.

39. The button adaptor assembly of claim **38**, wherein the anchor section is a two-piece assembly to enable attachment to the garment, the anchor section comprising an upper section to be disposed on the upper surface of the fabric and a pronged flanged anchoring unit that penetrates the fabric on the underside and pushes into the profiled hollowed stem of the upper section, the split in the prong being forced open into the wider top of the hollow by the protruding pin in the head section to secure all three components together and sandwich the fabric of the garment between the flanged bases of the two anchor section components.

* * * * *