US 20130328362A1

(19) **United States**

(12) **Patent Application Publication**

Miller

(10) **Pub. No.: US 2013/0328362 A1**

(43) **Pub. Date: Dec. 12, 2013**

(54) **BEACH CHAIR COVER WITH REMOVABLE POCKET/PURSE**

(76) Inventor: **Andrea Miller**, Norwalk, CT (US)

(21) Appl. No.: **12/822,151**

(22) Filed: **Jun. 23, 2010**

Publication Classification

(51) **Int. Cl.**
A47C 7/62 (2006.01)

(52) **U.S. Cl.**
CPC ***A47C 7/62*** (2013.01)
USPC **297/188.2**

(57) **ABSTRACT**

A portable chair cover can be attached to a portable folding chair and remain on the chair. A storage pouch on the back and pockets on the sides store desired items during transportation and while the chair is occupied. A shoulder strap provides hands-free transporting of the chair with the cover attached. A removable pocket with a carrying strap is alternately used as a pocket on the chair and as a purse or carry bag for valuables when detached from the chair. A foot support cover is used on a foot support portion of a lounge and draped down on the sand on a beach chair. The foot support cover is removable for shaking off the sand.

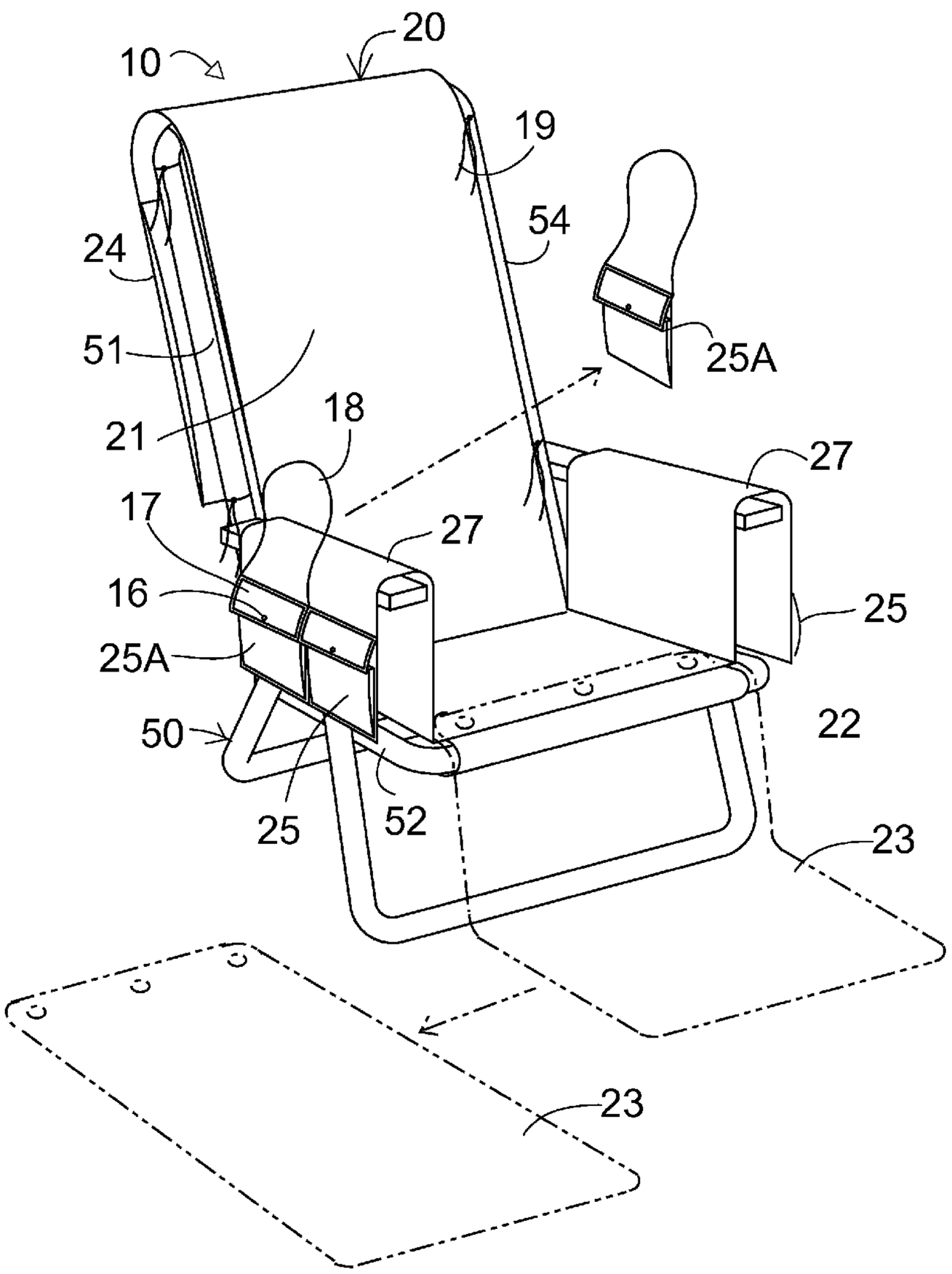

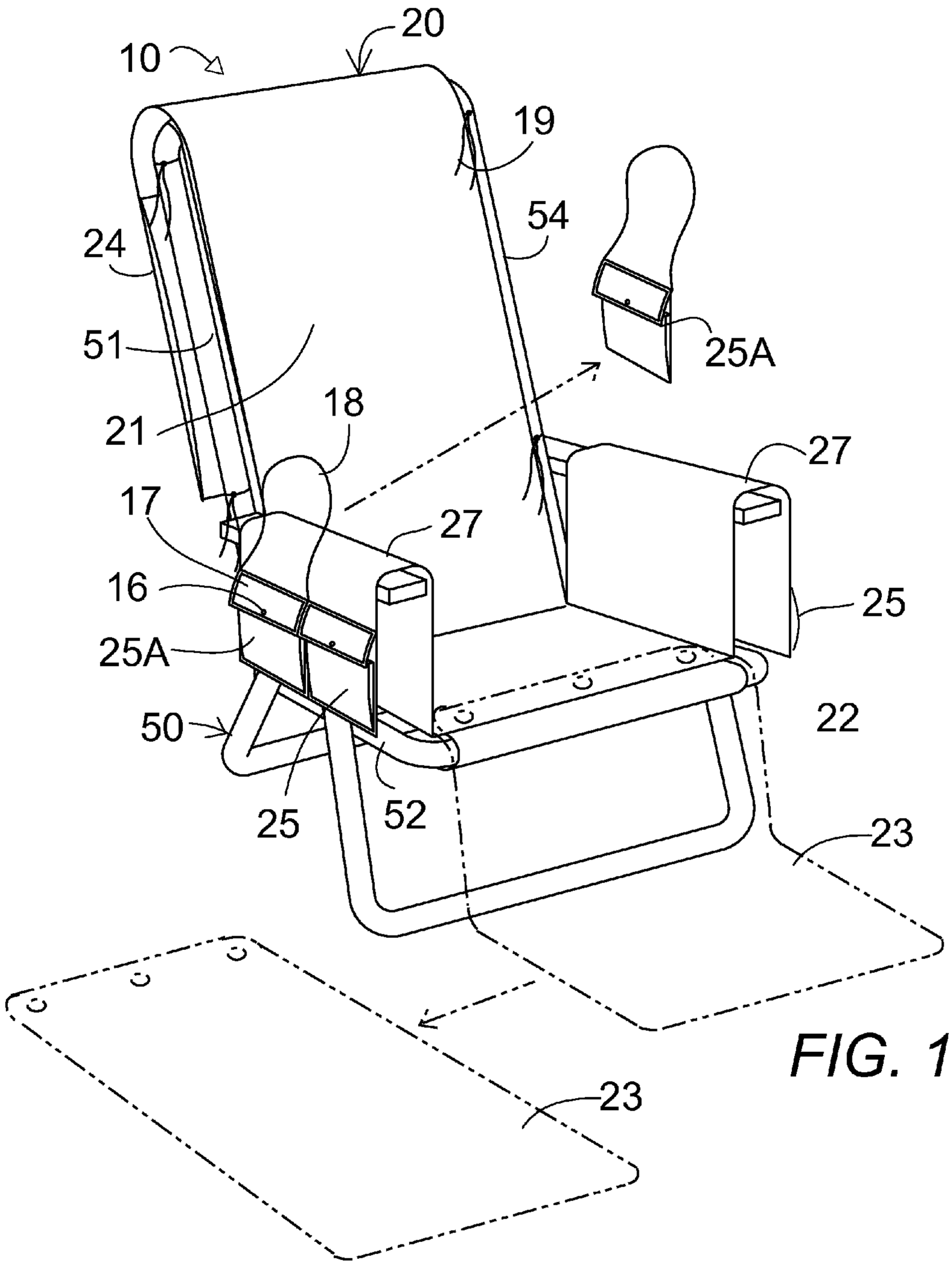

FIG. 1

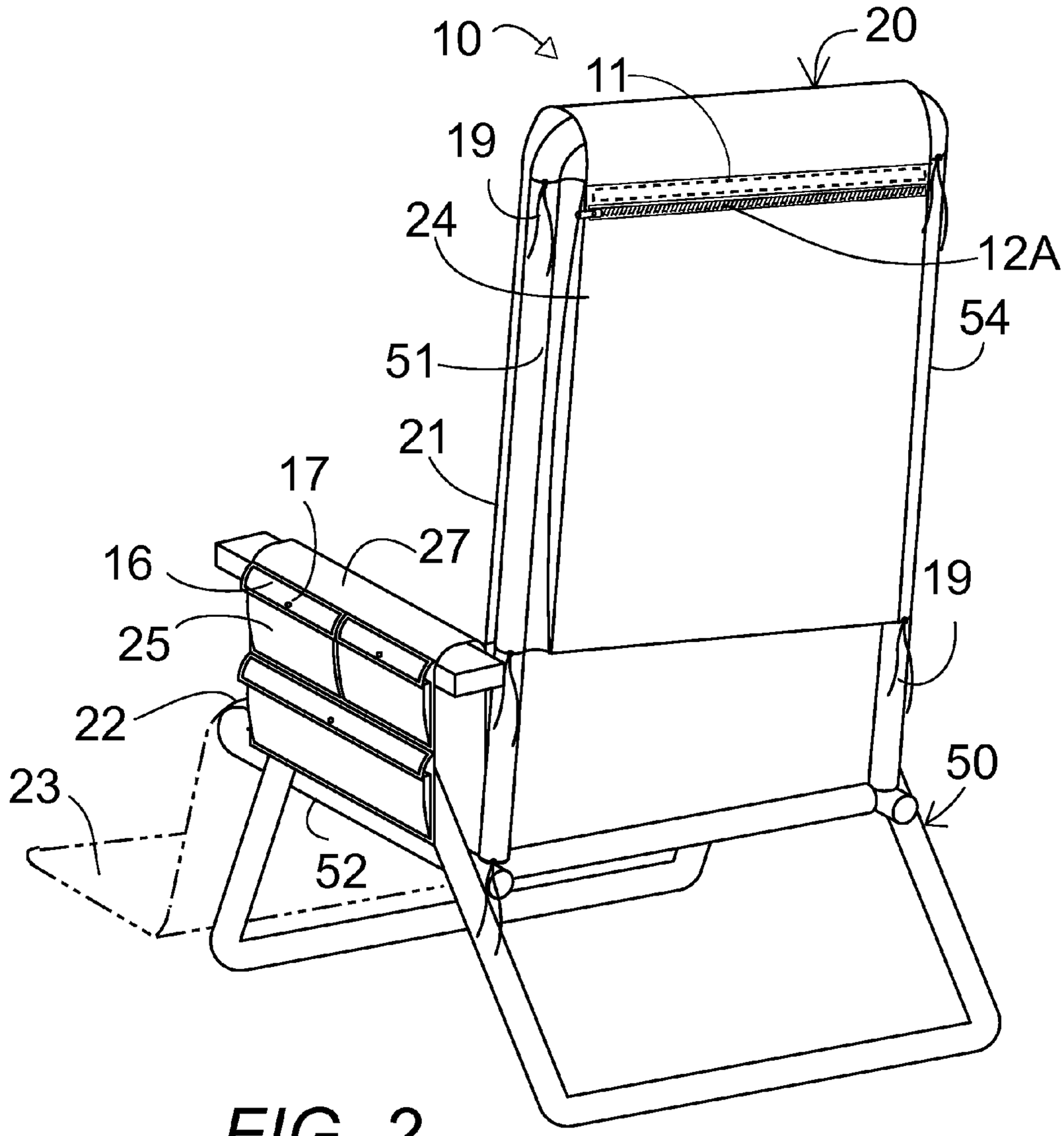

FIG. 2

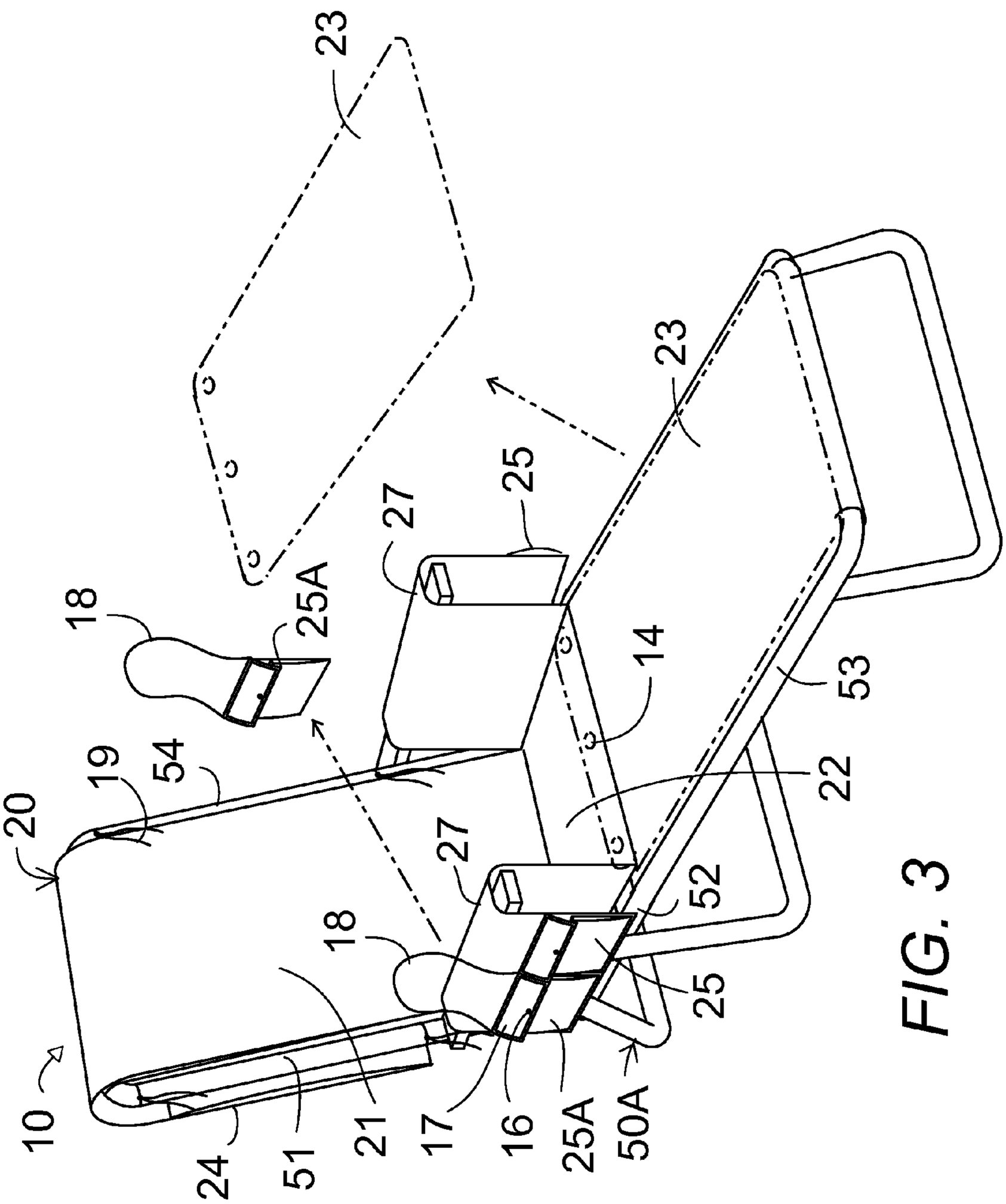
23
23
25
27
25A
18
14
53
19
54
22
20
27
52
18
25
10
24
51
21
17
16
25A
50A

FIG. 3

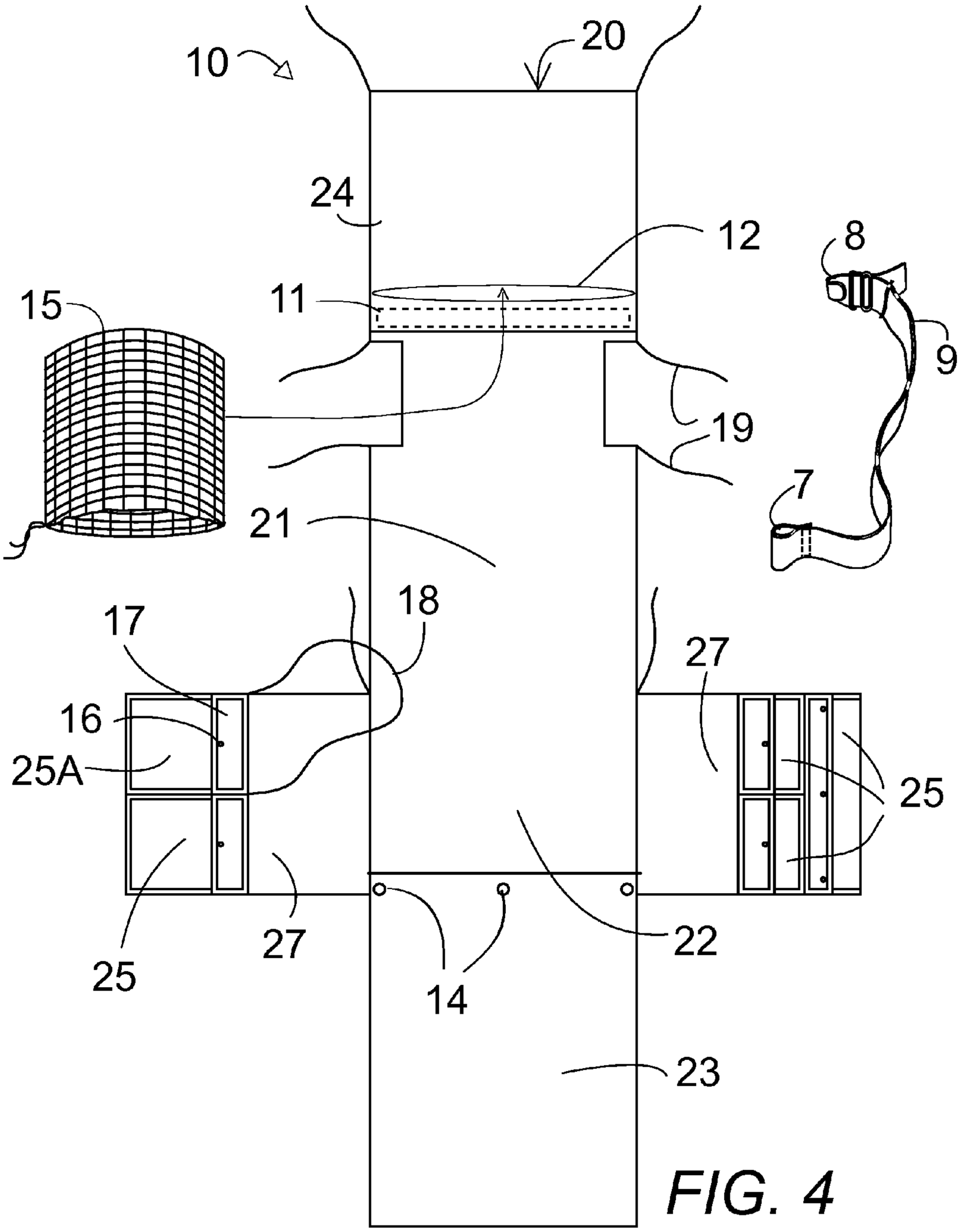

FIG. 4

BEACH CHAIR COVER WITH REMOVABLE POCKET/PURSE

CROSS-REFERENCE TO RELATED APPLICATIONS

[0001] Not Applicable.

STATEMENT REGARDING FEDERALLY SPONSORED RESEARCH OR DEVELOPMENT

[0002] Not Applicable.

THE NAMES OF THE PARTIES TO A JOINT RESEARCH OR DEVELOPMENT

[0003] Not Applicable.

BACKGROUND OF THE INVENTION

[0004] 1. Field of the Invention

[0005] The present invention relates to chair covers and particularly to a tie-on terry cloth beach chair or lounge cover with a detachable terry cloth extension to keep the user's feet off the sand and detachable pockets for storing personal items, one of the pockets having one or more shoulder straps for using the pocket as a removable purse and a an attachable shoulder strap for carrying the chair with the cover on while in a folded arrangement.

[0006] 2. Description of Related Art Including Information Disclosed Under 37 CFR 1.97 and 1.98

[0007] Many recreational activities involve outings to beaches and other pleasant locations, where people can picnic, play, and rest on the ground or on beach chairs, lounge chairs, recliners, and the like. In particular, many people enjoy a day at the beach, on the sand in the sun. Transporting desirable items to the recreational site is often a problem and storing the items upon arrival presents another problem. Temporarily leaving the set up at the recreational site to get something in the car or buy refreshments or go to the water present an additional problem of what to do with valuables, such as wallets, cell phones, watches, jewelry, iPods and other items, when the user does not wish to leave them at the site but does not wish to carry the entire set up with the user when temporarily leaving the set up. Prior art devices do not adequately solve these problems.

[0008] U.S. Patent Application #20100001565, published Jan. 7, 2010 by Gray et al, claims a tie-on cover for a chaise lounge pad that is so constructed as to fit pads of varying thicknesses. The cover has a utility pocket attached to a side of the intermediate portion, the pocket being provided with at least one tie to selectively attach the pocket to the frame of the chaise.

[0009] U.S. Patent Application #20040075315, published Apr. 22, 2004 by Patrick, claims a beach lounge chair cover with storage compartments which comprises a removable, washable, rectangular cover for a folding chaise lounge which covers the chaise lounge and contains a removable cushion. The cover cushions the user from the hard frame of the chaise lounge and provides insulation when the chaise-lounge frame and body-support elements are hot or cold. The cushion is inserted into the cover through an opening in one of the longer edges, which is closed with a releasable fastener, preferably hook and loop fastening material. Convenience pockets depend from both sides of the cover. Deep pockets sewn to the back of cover, at the head end and the foot end, slip over the chaise-lounge frame. An oblong pillowcase, permanently attached to the head end of the cover, is sewn together along three of its edges and left open on one of its longer edges. A pillow is inserted into the pillowcase through the open edge, which is closed with a releasable fastener.

[0010] U.S. Patent Application #20020063455, published May 30, 2002 by Self, shows a chair cover which includes a first cover surface, a second cover surface, and a non-elastic flap. Moreover, the non-elastic flap is attached to the second cover surface, in which the non-elastic flap and the second cover surface form a pocket therebetween. According to another embodiment, a chair cover includes a first cover surface, a second cover surface, and a non-elastic flap. Moreover, the non-elastic flap is attached to the second cover surface, in which the non-elastic flap and the second cover surface form a pocket therebetween. In addition, the first cover surface and the second cover surface are disposed within the pocket.

[0011] U.S. Patent Application #20090322129, published Dec. 31, 2009 by Rodill et al, describes a lounge chair cover designed to stay in a fixed position to both cover and easily shoulder carry a standard multi-position folding lounge chair at all times until taken off to clean, having a carrying strap, an embedded beach bag and side storage pockets having a top, middle and lower portion where as the top and lower portions have pockets that generally conform around the chair ends remaining securely snug to the chairs embodiment. The cover made of soft, absorbent and sturdy material protects the chair from rain, salt and heat extremes and offers extended comfort to the user by staying on the chair until easily removed by user when cleaning is necessary.

[0012] U.S. Patent Application #20090001790, published Jan. 1, 2009 by Williams, discloses a lounge chair cover comprising a substantially-rectangular, typically absorbent, textile sheet and adjustable fasteners at the four corners of the textile sheet. The lounge chair cover may have detachable side pouches.

[0013] U.S. Patent Application #20090028466, published Jan. 29, 2009 by Bailey, puts forth a convertible tote bag and seat cover combination having a tote bag configuration and a seat cover configuration. The convertible tote bag and seat cover includes a first wall section, a second wall section, and a floor section connected to the first wall section and also connected to the second wall section. Attaching means such as snaps, zippers, buttons, or hook and loop fasteners are affixed to attaching regions of the first and second wall sections. The cover configuration is converted to the tote bag configuration by attaching these reciprocal attaching means, and conversely, the tote bag configuration is converted to the seat cover configuration by removing the reciprocal attaching means. Elasticized handles may be positioned on the tote bag, and these handles can be repositioned in the seat cover configuration to serve as straps. The seat cover with straps can thus advantageously be used in recreational functions such as providing a seat cover for a golf car, a seat cover for a boat seat, a cover for a picnic table, a beach towel, a ground cloth, and the like. Thus, the convertible tote bag and seat cover also provides the dual function of carrying recreational items and then providing a cover at the place of recreation.

[0014] U.S. Patent Application #20060090975, published May 4, 2006 by Brock et al, illustrates a multipurpose tote bag which includes a detachable ground cover having an upper end, a lower end and two side ends disposed between the upper and the lower ends, and an attaching means positioned along the upper end. The tote bag also includes a tote member having a base member, a front portion and an opposed back

portion extending from the base portion, and a pair of opposed side portions extending from the base portion and disposed between the front portion and the back portion. Either one of the front portion or the back portion includes at least one outside pocket member. The tote bag still also includes an attaching means positioned along an upper edge of either one of the front portion or the back portion that is complementary to the ground cover attaching means, for securing the ground cover to the tote member. The tote bag further includes a carrying means secured to said tote member, and a side separating means integral with the side end of the tote member for separating the side portion in half in order to open up the tote member.

[0015] U.S. Pat. No. 7,225,483, issued Jun. 5, 2007 to Remblad, is for a combination beach bag and beach mat for storing and transporting personal items which includes an upper storage section having an inner storage cavity for containing a towel and a beach mat therein, and the beach mat integrally attached to the storage section and easily drawn out and unfolded from the inner storage cavity for disposition on the ground or for covering various types of chairs. The storage section and the beach mat both have integrally attached thereto accessory pouches or pockets that can be insulated for the storage of other items such as keys, wallets, reading material, and beverage containers. The beach mat and the accessory pouches are easily folded back into the inner storage cavity of the upper storage section whereupon the upper storage section functions as a beach bag for convenient transport by draping a carrying strap attached to the upper storage section over the individual's shoulder.

[0016] U.S. Pat. No. 7,076,816, issued Jul. 18, 2006 to Nielsen et al, provides a towel or blanket with an integral carrying case. The carrying case is attached at a portion of its inner surface to the towel or blanket in an upper portion thereof. The carrying case is adapted to permit the towel or blanket to be stuffed inside during transport and storage of the towel or blanket, and adapted to receive a pillow when the towel or blanket has been withdrawn from the case for use. The towel or blanket additionally includes slip cover pockets located at one or both ends and adapted to be placed over the end or ends of a lounge chair. The towel or blanket further includes pockets for storing items.

[0017] U.S. Pat. No. 4,518,198, issued May 21, 1985 to Daniels, puts forth a cloth covering for lawn furniture which attaches to the furniture and converts into a container to carry beach paraphernalia and other articles to include the lawn furniture. Pockets are included which are accessible when the covering is spread over lawn furniture either having or lacking arm rests.

[0018] U.S. Pat. No. D359,411, issued Jun. 20, 1995 to Wade, shows the ornamental design for a combined fitted lounge chair cover, face cloth and tote bag.

[0019] U.S. Pat. No. D450,970, issued Nov. 27, 2001 to Self, claims the ornamental design for a lounge chair tanning towel.

[0020] U.S. Pat. No. 6,626,491, issued Sep. 30, 2003 to Blome et al, describes a chaise lounge cover and towel comprising a substantially-rectangular fabric sheet, a chair head pocket, a storage pouch, and an elastic cloth band located proximate an open edge of the chair head pocket wherein the elastic cloth band is configured to form a gather in the open edge. In one embodiment, the substantially-rectangular fabric sheet has opposing head and foot ends, first and second major edges, and front and rear faces. The chair head pocket is formed at the head end and extends from the rear face. The chair head pocket is configured to encase at least a portion of a head of a chaise lounge. The storage pouch is coupled to the foot end and has an opening proximate the front face. The storage pouch is configured to receive the fabric sheet and the chair head pocket without inverting the storage pouch.

[0021] U.S. Pat. No. 6,616,225, issued Sep. 9, 2003 to Graff, discloses a towel that is adapted to be mounted to a chair where the pouch region of the towel functions to hold the main body portion of the towel in a mobile configuration, and the pouch region further supports the head region of the towel onto the upright portion of the chair. The towel comprises a handle attached to the perimeter opening of the pouch portion and the handle is adapted to carry the towel.

[0022] U.S. Pat. No. 6,541,096, issued Apr. 1, 2003 to Richards et al, concerns a towel made from a single sheet of material has a first set of pockets disposed at corners of the towel that are formed from folds so that the pockets are formed from multiple layers of the material. A second and third set of pockets are disposed between the first set of pockets on a first side and second side, respectively. At least one securing pocket is disposed on the bottom surface of the towel. The towel may be made from a single sheet of material by folding the top edge and bottom edge toward a middle line to form a first and second securing pocket; stitching the first and second securing pockets along the top edge and bottom edge, respectively, to form openings in the securing pockets; folding a first side and second side toward the centerline and sewing lines perpendicular to the centerline to form the pockets.

[0023] U.S. Pat. No. D527,938, issued Sep. 12, 2006 to Dandrea, illustrates the ornamental design for a chaise cover device.

[0024] U.S. Pat. No. D553,895, issued Oct. 30, 2007 to Adams, is for the ornamental design for the lounge chair cover with side pockets.

[0025] U.S. Pat. No. D286,486, issued Nov. 4, 1986 to Goble, Jr. et al, provides the ornamental design for removable lounge chair cover.

[0026] U.S. Pat. No. D409,039, issued May 4, 1999 to Kuehnl et al, shows the ornamental design for a lounge chair cover.

[0027] U.S. Pat. No. 3,151,909, issued Oct. 6, 1964 to Gerdetz, describes a combination chair cover and carrying bag comprising an envelope-like back portion for receiving the back of the chair frame, a carrying handle on the top of said back portion, a pocket on the backside of said back portion, an envelope-like portion for receiving a chair seat portion, and a pocketed flap attached to the front edge of said seat envelope.

[0028] U.S. Pat. No. 4,725,094, issued Feb. 16, 1988 to Greer, indicates a towel or cover for covering a lawn chair or sand chair, which cover has a kangaroo-type pocket provided in the head or upper portion of the cover. The kangaroo-type pocket is positionable in one of two positions, one being in front of the chair for forming therein a pillow by providing clothing or other soft material in the pocket, and the other being positionable in the rear of the chair for storing other articles and the like therein. The head portion of the towel includes a hood-type member for telescopingly receiving therein the top portion of the chair which it covers. The hood portion is also defined by a pair of stretchable rectangular-shaped gussets to allow the hood portion to stretchably fit over any type and size of chair. In the first version of the cover, the intermediate portion thereof is provided with a first and sec-

ond pair of loops for use in retaining the intermediate portion of the cover to the sand chair, a first pair of loops being used for a first kind of sand chair, and both pairs of loops being used for a second kind of sand chair. In the second embodiment of the invention, the towel or cover is used for covering a chaise lounge, which cover is also provided with peripheral elasic band provided in the hemmed peripheral border of the cover. In the second embodiment, there is also provided a retaining band for holding the cover on the lounge. This retaining band is provided on the undersurface of the cover, and is fixed between the two side edge surfaces of the cover. Each end of the stretchable band is provided with a pair of spaced-apart buttons for cooperating with a respective loop fixed to a side edge of the cover directly juxtapositioned next to the respective pair of loops, whereby the tension on the retaining band may be varied by inserting one or the other of the pair of buttons through the respective loop adjacent the pair of buttons.

[0029] U.S. Pat. No. 6,030,034, issued Feb. 29, 2000 to Plohetski, puts forth an accessory for lounge or patio chairs. The accessory comprises a storage bag for conveniently storing a cover for the chair with the chair itself and a bolster for supporting the head, neck, back or legs of a user. The accessory also provides for convenient storage of the bolster with the chair itself as it does for a chair cover. In addition, the storage bag with enclosed chair cover can also act as a pillow to support the back, neck or head of the user when attached to the lounge or patio chair. Also disclosed is a bolster capable of storing a protective cover which can be directly attached to a lounge or patio chair.

[0030] U.S. Pat. No. 4,553,785, issued Nov. 19, 1985 to Duke, Jr. et al, illustrates a readily removable and washable cover for a beach lounge chair which includes opposing end pockets that are slipped over cantilevered ends of the lounge chair. Between the end pockets is a contiguous panel which covers the seat area of the lounge chair. Depending free-hanging skirt portions on opposite sides of the cover are equipped with convenience pockets in ready reach of a user. A head pillow, securing straps and slits enabling the attachment of a side table to the lounge chair can be included.

[0031] U.S. Pat. No. 5,938,336, issued Aug. 17, 1999 to King, is for a lightweight, flexible and machine washable convertible organizer tote bag that has three basic carrying portions, a central U-shaped or sling compartment and two side storage panels on either side thereof. The bag also readily converts from its tote bag conformation to a seat cover for use on chairs, chaises, and the like. When configured as a seat cover and placed on the horizontal seat of a chair, chaise, or the like, the side panels extend downward such that each pocket of the combination is positioned for convenient accessibility at the side of the seat. The seat cover easily and conveniently converts into an organizer tote bag by lifting the handles.

[0032] U.S. Pat. No. 5,620,229, issued Apr. 15, 1997 to Ledford, shows a combination carrying bag, cover and accessory storage for a portable folding lounge. The article, which is a flexible material detachably fitted to the lounge, is adapted to transport and store the lounge and personal items employed in the use of the lounge by a person reclining thereon. The article provides a uniform surface upon which a user may recline as well as a bag which fully encloses the lounge upon folding for subsequent storage and transport.

[0033] U.S. Pat. No. 5,326,152, issued Jul. 5, 1994 to Baron, describes a cover for a folding lawn chair to allow a person to conveniently carry the folding lawn chair as well as to increase comfort when the person is using the lawn chair. The cover may include an enveloped or flapped portion on each on its ends into which each end of the lawn chair can be situated. The cover thus remains in position on the lawn regardless of wind and movement by the user. The cover further includes a strap to accommodate convenient carrying of the lawn chair. The cover may finally include a pillow positioned at the head portion of the cover, a pocket for carrying magazines and other accessories, and an insulated receptacle for carrying and holding beverages such as soda and beer.

[0034] U.S. Pat. No. 7,581,788, issued Sep. 1, 2009 to Johnson, discloses a fitted cover for a lounge chair which includes a plurality of pockets secured along the side edges thereof to allow for the storage of personal items. The fitted cover has an auxiliary pocket to allow for the storage of additional personal articles and to shield user's head or face against sun rays. The auxiliary pocket can be fixedly elevated in a variety of desired angular orientations.

[0035] U.S. Pat. No. 5,275,463, issued Jan. 4, 1994 to Rocha, indicates a lounge chair cover which can be rolled up and fastened so as to be carried like a duffel bag, the cover including a panel to cover the top of the chair back, seat, and leg rest portions, having a hood pocket into which the top of the back portion of the chair fits, a pocket member hanging from the top which can serve as an attached pillow cover; a lateral back strap to stretch the cover taut across the back portion, and spaced strap members on the lower leg portion releasably connected together, preferably by hook and loop fasteners, longitudinal strap members along the lateral edges of the lower part of the main panel to fasten the panel smoothly and tautly to the leg rest portion of the chair; a pair of side pockets hanging downwardly from opposite sides of the seat portion of the cover, a pair of strap handles and cross reinforcing straps, and a strap closure member to hold the cover in a rolled form of a duffel bag with all pockets and their contents inside the roll.

[0036] U.S. Pat. No. 4,273,380, issued Jun. 16, 1981 to Silvestri, concerns a beach accessory in the form of a combined beach towel—chair cover—tote bag, comprising an elongated strip of absorbent towelling having pockets on its opposite major surfaces at one end, at least one of said pockets being large enough to store the entire length of towelling not covered by the pockets, the pockets opening inwardly of the towelling and having stringing through casings along their free edges to allow closure thereof to form a tote bag for said towelling and other articles to be carried.

[0037] U.S. Pat. No. 4,877,288, issued Oct. 31, 1989 to Lee, illustrates a lounge chair cover which includes an elongated panel of fabric having lateral edges and end borders. Back or end flaps are secured to the panel at the end borders and partially along the lateral edges to define inwardly directed pockets at the ends of the panel. The pockets are dimensioned to be inserted over the ends of a standard multi-position lounge chair so that the panel covers the entire top surface area of the chair while the back or end flaps cover only the outermost portions of the underside of the chair, elastic bands being used to snug the flaps against the chair. Additional pockets are formed in the back flap for convenient storage of miscellaneous articles. A cover flap depends from the back flap border and contains a hidden pocket for the storage of valuables out of sight. A pillow pocket is formed in the panel near one end for the slidable insertion of an inflatable pillow.

[0038] U.S. Pat. No. 4,892,353, issued Jan. 9, 1990 to Goddard, is for a cover for a chaise lounge chair having a body section of absorbent material extending over the chair surface. Fitted pockets engage the head and foot ends of the lounge. Drop pockets are provided at the side of the cover and hang generally vertically when the cover is in place. An intermediate elasticized section extends transversely of the cover with elastic bands extending adjacent the elasticized strip.

[0039] What is needed is a means for transporting and storing desirable items to a recreational site and temporarily retaining valuable items when leaving the set up at the recreational site.

BRIEF SUMMARY OF THE INVENTION

[0040] An object of the present invention is to provide a portable chair cover which can be attached to the portable chair and remain on the chair, being used to store desired items during transportation and when set up at a recreational site and having a carrying strap for transporting the chair with the cover attached, as well as having a removable pocket with a carrying strap for use as a purse and thereby provide a means for transporting and storing desirable items to a recreational site and temporarily retaining valuable items when leaving the set up at the recreational site.

[0041] In brief, the present invention provides a beach chair cover made of terrycloth that features neoprene pockets of various sizes, one of which is removable for use as a purse to carry valuables when leaving the chair. All pockets have closures such as snaps, loops and buttons, zippers, VELCRO® to keep personal items secure, dry and protected from the sun, sand, water and elements, and are attached to the terrycloth cover with snaps or VELCRO®, and drape down from each armrest and one large "pouch", that drapes over the back of the chair attached using heavy duty VELCRO®.

[0042] One of the detachable side pockets has a shoulder strap and doubles as a purse. The removable purse is unsnapped from the terrycloth cover and used to carry important items such as money, keys, etc. when stepping away from the chair.

[0043] The present invention is tied to the chair and stays on the chair allowing the user to carry their beach essentials and their chair as one unit, leaving both hands free by attaching a shoulder strap to the chair. Alternately the user can carry just the folded up beach chair cover in the large back pouch if they were on vacation and wanted to take it with them and use on a chair at the hotel.

[0044] The present invention will be packaged in a mesh bag that will also be used to carry the user's essentials in and out of house. The user can put everything in the mesh bag and then put the mesh bag in the back pouch. The side pockets are folded onto the seat of the chair and the chair folded in the closed position. Since everything is on the chair the user's hands are free to hold two children's hands or a single child's hand. At the recreational set up site, the user would then unpack the back pouch and distribute items to the side pockets so they have everything at their fingertips while sitting in the beach chair or lounge.

[0045] The portable folding chair cover may fabricated in large, medium and small sizes for use an a variety of folding chairs, including a child's folding chair.

BRIEF DESCRIPTION OF THE SEVERAL VIEWS OF THE DRAWINGS

[0046] These and other details of my invention will be described in connection with the accompanying drawings, which are furnished only by way of illustration and not in limitation of the invention, and in which drawings:

[0047] FIG. **1** is a perspective view of the portable folding seat cover of the present invention attached to a beach chair showing the detachable purse or carry bag for valuables and the detachable foot rest portion covering the sand;

[0048] FIG. **2** is a perspective view of the portable folding seat cover of FIG. **1** attached to a beach chair showing the storage pouch on the back of the chair;

[0049] FIG. **3** is a perspective view of the portable folding seat cover of the present invention attached to a portable folding lounge showing the detachable purse or carry bag for valuables and the detachable foot rest portion covering the foot rest of the lounge;

[0050] FIG. **4** is a plan view of the portable folding seat cover of FIG. **1** laid out flat showing the different elements.

DETAILED DESCRIPTION OF THE INVENTION

[0051] In FIGS. **1-4**, a cover device **10** for a portable folding seat **50** and **50**A comprises a foldable planar sheet **20** with an array of connected cover portions **21**, **22**, and **23**, a large storage pouch **24** and a number of smaller storage pockets **25**, including a detachable pocket **25**A usable as a purse or carry bag for valuables. The cover device **10** may be attached to a portable folding beach chair **50**, as in FIGS. **1** and **2** and a portable folding lounge **50**A, as in FIG. **3**, and may be configured to fit any of a wide variety of different types and sizes of portable folding seats.

[0052] The foldable planar sheet **20** comprises a chair back support cover portion **21** attached thereto for removably covering a front face of a back support portion **51** of the portable folding seat **50**; a chair seat cover portion **22** for removably covering a sitting portion **52** of a portable folding seat, and a foot rest portion **23** attached to a front edge of the chair seat cover portion for covering a foot rest portion **53** of a portable folding lounge **50**A, as shown in FIG. **3**, when used with the portable folding lounge **50**A. The foot rest portion **23** covers a portion of the ground in front of the portable folding seat when used with a portable folding beach chair **50**, as shown in FIGS. **1** and **2**. The foot rest portion **23** is preferably attached to the chair seat cover portion **22** by a removable connection, such as mating snap fasteners **14** or mating hook and loop fasteners **11**, similar to the attachment for the storage pouch **24**, shown in FIGS. **2** and **4**, so that the foot rest portion **23** is detachable to remove sand or other foot bourn material from the foot rest portion without having to remove the complete cover device from the portable folding chair.

[0053] Two side multiple pocket portions **27** are each attached to one side of the chair seat cover portion **22** and each extend upwardly and are draped over an arm **57** of the portable folding seat **50** and **50**A. Each has a pocket portion hanging down on the outside of the arm, each of the pocket portions having a plurality of pockets **25** and **25**A, each pocket having a closable opening, such as a closing flap **17** and mating snap fasteners **16**. The plurality of pockets **25** and **25**A are arranged on the pocket portion for easy access by an occupant of the portable folding chair. At least one removable pocket **25**A is removably attached to at least one of the pocket portions. The removable pocket **25**A has a carrying strap **18**

so that the at least one removable pocket **25**A may be attached to the pocket portion for use as a pocket and alternately detached from the pocket portion for use as a purse or carrying bag for valuables. The removable pocket **25**A is preferably attached to the pocket portion **27** by mating hook and loop fasteners or mating snap fasteners.

[0054] A storage pouch **24** is attached to a top of the back support cover portion **21** for hanging over a top of the portable folding seat and hanging down covering a back of the back support portion **51** of the portable folding seat. The storage pouch **24** has an interior storage space the size of the entire back support cover portion **21** and a closable opening **12**, which may be a zipper opening **12**A, as shown in FIG. **2**, extending the width of the pouch to receive and store therein items larger than the capacity of the plurality of pockets **25** and **25**A on the pocket portions **27**. The storage pouch **24** is preferably removably attached to the top of the seat back cover portion by a strip of mating hook and loop fasteners **11** running the length of the connection therebetween. A mesh bag **15**, as shown in FIG. **4**, is normally stored within the storage pouch **24** and is removable from the storage pouch **24** for carrying items associated with the recreational use of the portable folding chair and chair cover device.

[0055] The pockets **25** and **25**A and the storage pouch **24** each have at least one closure taken from the list of closures including snaps, loops and buttons, zippers, and mating hook and loop fasteners.

[0056] The chair back support cover portion **21**, chair seat cover portion **22**, and the storage pouch portion **24** are attached to various frame portions **54** of the portable folding seat by ties **19** or other removable attaching means.

[0057] The back support cover portion **21**, the chair seat cover portion **22**, and the foot rest portion **23** are fabricated of a soft water absorbent cloth material to support the body of a user, preferably a sheet of terry cloth cut into the desired configuration.

[0058] The pockets **25** and **25**A and the storage pouch **24** are fabricated of a waterproof fabric to keep personal items secure, dry and protected from the sun, sand, water and elements, preferably fabricated of neoprene or other waterproof material.

[0059] In FIG. **4**, a shoulder strap **9** is attachable to the portable folding chair and chair cover device for transporting the chair and cover device over a shoulder of a user leaving the hands of the user free for other uses.

[0060] In use, the portable folding seat cover **10** of the present invention is attached to a portable folding seat using various ties **19** or other removable attaching means, and filled with beach items such as books, newspaper, clothes, water, suntan lotion, sun glasses, iPod, cell phone in the storage pouch **24** and the pockets **25** and **25**A. The covered chair can be folded up and carried as one unit by attaching the adjustable shoulder strap **9** to the chair with hooks or mating hook and loop fastener straps, making transport hands free.

[0061] The pockets **25** and **25**A are attached to the terrycloth cover with mating snaps or hook and loop fasteners, and drape down from each armrest **57**. One large pouch **24** drapes over the back of the chair and is attached to the back support cover portion **21** using heavy duty mating hook and loop fasteners **11**. At least one detachable side pocket **25**A has a shoulder strap **18** and doubles as a purse or carry bag for valuables when detached from the chair cover when stepping away from the chair.

[0062] A snap-on/snap off detachable terrycloth extension foot support cover **23** for use on a lounge chair **50**A or to keep feet off sand if using a beach chair **50**. This allows the user to remove the foot support cover from the seat cover portion **22** on chair to remove sand, etc. from the feet support cover portion **23** without having to remove the complete cover from the chair.

[0063] The portable folding chair cover of the present invention is configured to fit on many different types of chairs, including but not limited to sand chairs and lounge chairs. The terrycloth cover and neoprene pockets can be interchanged by purchasing additional colors, designs of terrycloth and/or pockets.

[0064] The cover is packaged in a mesh bag **15** that may also be used to carry the user's essentials in and out of house. The user may put everything in the mesh bag and then put the mesh bag in the back pouch **24**. The side pockets **25** and **25**A are folded onto the seat cover portion **22** on the seat **52** of the chair and chair folded into a closed position. Since everything is on the chair the user's hands are free to hold children or a child's hand. The user would then unpack the back pouch and distribute items to the side pockets to have everything at the user's fingertips sitting in the covered chair.

[0065] It is understood that the preceding description is given merely by way of illustration and not in limitation of the invention and that various modifications may be made thereto without departing from the spirit of the invention as claimed.

What is claimed is:

1. A cover device for a portable folding seat, the device comprising:

a foldable planar sheet comprising a chair back support cover portion attached thereto for removably covering a front face of a back support portion of the portable folding seat; a chair seat cover portion for removably covering a sitting portion of a portable folding seat; a foot rest portion attached to a front edge of the chair seat cover portion for covering a foot rest portion of a lounge chair when used with a portable folding lounge and for covering a portion of the ground in front of the portable folding seat when used with a portable folding beach chair; two side multiple pocket portions, each one attached to one side of the chair seat cover portion and each extending upwardly and draped over an arm of the portable folding seat and each having a pocket portion hanging down on the outside of the arm, each of the pocket portions having a plurality of pockets each pocket having a closable opening, the plurality of pockets arranged on the pocket portion for easy access by an occupant of the portable folding chair, at least one removable pocket removably attached to at least one of the pocket portions, the at least one removable pocket having a carrying strap so that the at least one removable pocket may be attached to the at least one pocket portion for use as a pocket and alternately detached from the at least one pocket portion for use as a carrying bag for valuables; a storage pouch attached to a top of the back support cover portion for hanging over a top of the portable folding seat and hanging down covering a back of the back support portion of the portable folding seat, the storage pouch having an interior storage space the size of the entire back support cover portion and a closable opening extending the width of the pouch to receive and store therein items larger than the capacity of the plurality of pockets on the pocket portions.

2. The cover device of claim **1** wherein the chair back cover portion, the chair seat cover portion, and the foot rest portion are fabricated of a soft water absorbent cloth material to support the body of a user.

3. The cover device of claim **2** wherein the chair back cover portion, the chair seat cover portion, and the foot rest portion are fabricated of a sheet of terry cloth.

4. The cover device of claim **1** wherein the pockets and the storage pouch are fabricated of a waterproof fabric to keep personal items secure, dry and protected from the sun, sand, water and elements.

5. The cover device of claim **4** wherein the pockets and the storage pouch are fabricated of neoprene.

6. The cover device of claim **1** wherein the pockets and the storage pouch each have at least one closure taken from the list of closures including snaps, loops and buttons, zippers, and mating hook and loop fasteners.

7. The cover device of claim **1** wherein the storage pouch is attached to the top of the seat back cover portion by a strip of mating hook and loop fasteners running the length of the connection therebetween.

8. The cover device of claim **1** wherein the at least one removable pocket is attached to the at least one pocket portion by mating hook and loop fasteners.

9. The cover device of claim **1** wherein the at least one removable pocket is attached to the at least one pocket portion by mating snap fasteners.

10. The cover device of claim **1** wherein the chair back cover portion, the chair seat cover portion, and the storage pouch portion are attached to various frame portions of the portable folding seat by ties.

11. The cover device of claim **1** wherein the foot rest portion is attached to the chair seat cover portion by a removable connection so that the foot rest portion is detachable to remove sand or other foot bourn material from the foot rest portion without having to remove the complete cover device from the portable folding chair.

12. The cover device of claim **11** wherein the removable connection comprises mating hook and loop fasteners.

13. The cover device of claim **11** wherein the removable connection comprises mating snap fasteners.

14. The cover device of claim **1** further comprising a shoulder strap attached to the portable folding chair and chair cover device for transporting the chair and cover device over a shoulder of a user leaving the hands of the user free for other uses.

15. The cover device of claim **1** further comprising a mesh bag normally stored within the storage pouch, the mesh bag removable from the storage pouch for carrying items associated with the recreational use of the portable folding chair and chair cover device.

* * * * *