Aug. 20, 1935. W. S. JOHNSON 2,011,975

CLEANER

Filed March 21, 1933 3 Sheets-Sheet 1

Fig. 1.

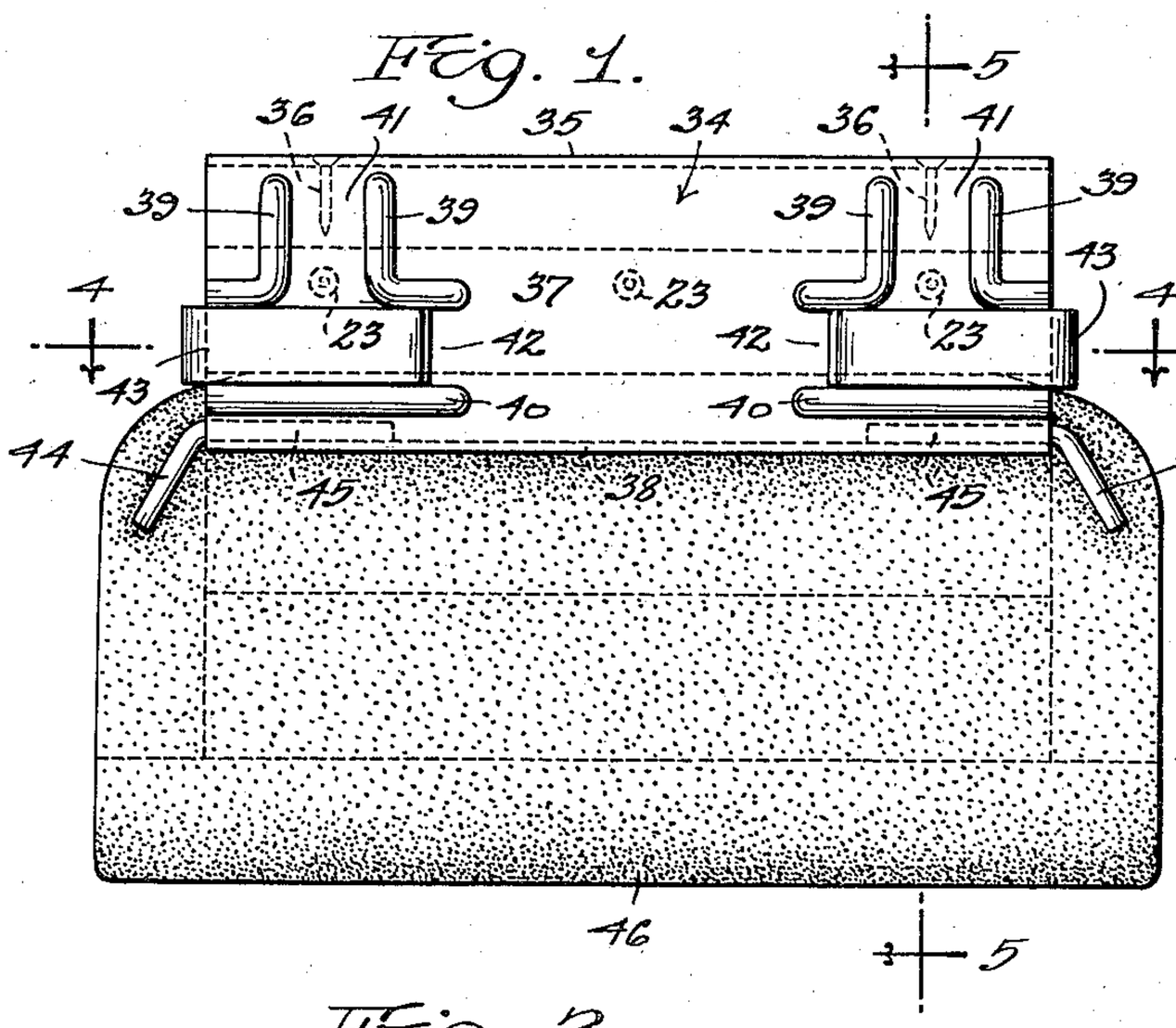

Fig. 2.

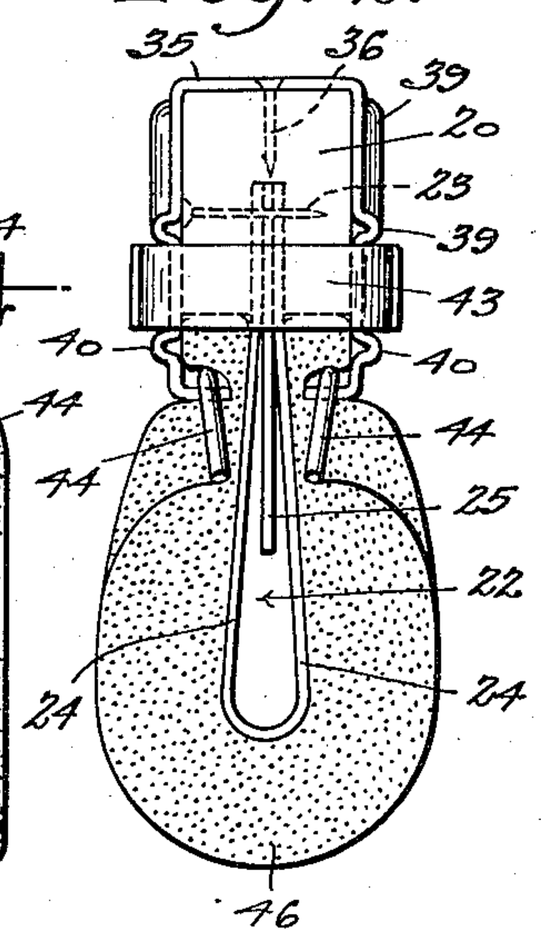

Fig. 3.

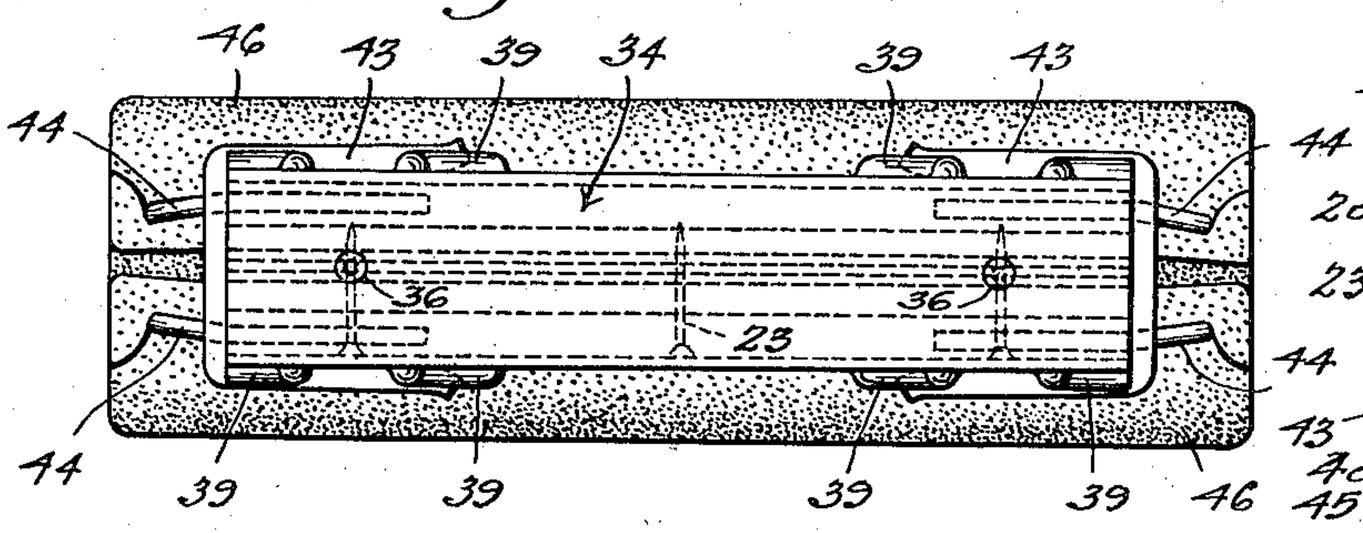

Fig. 5.

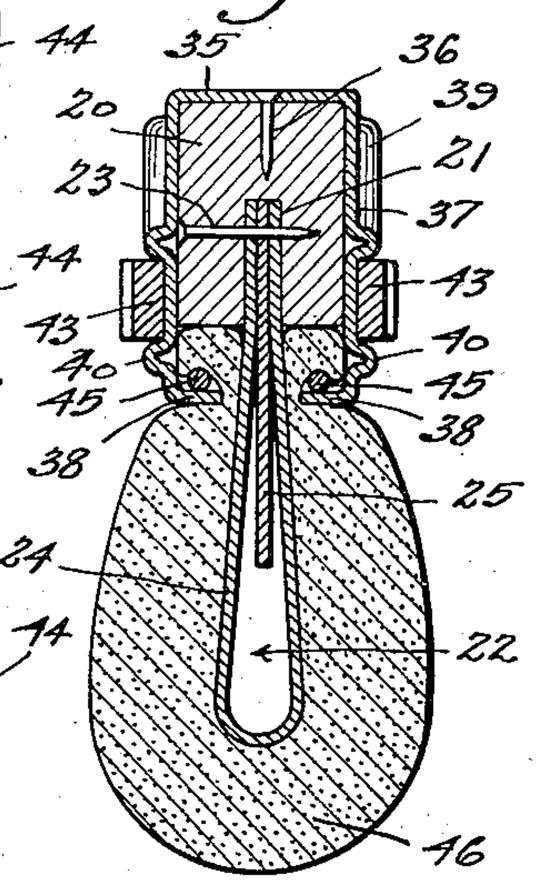

Fig. 4.

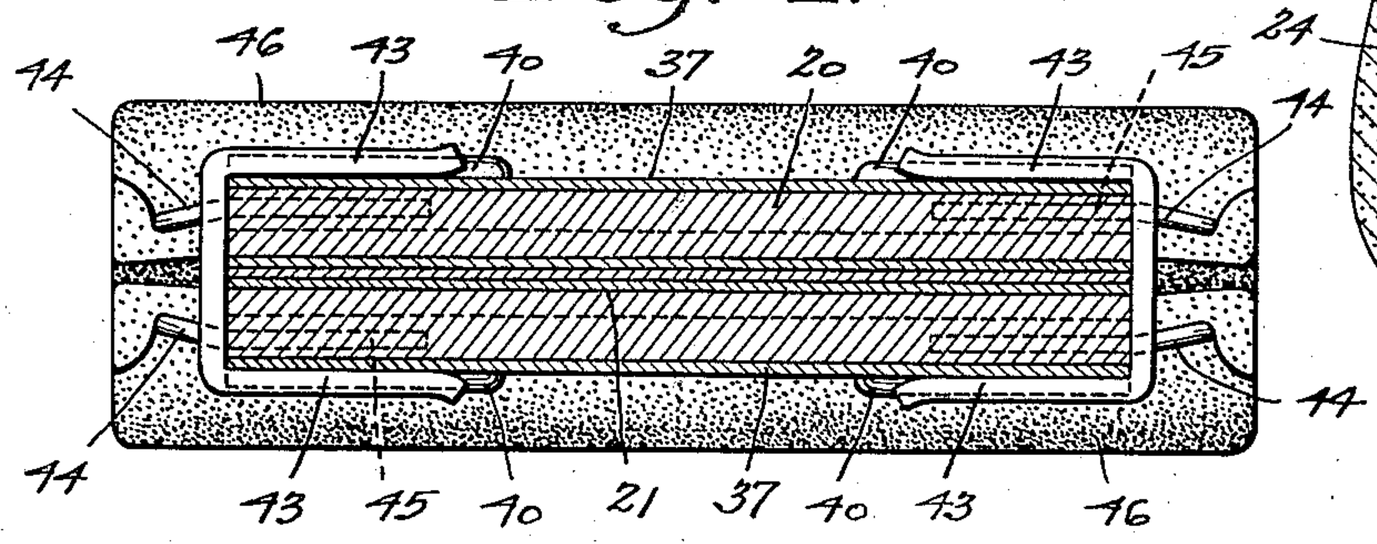

Inventor

W. S. JOHNSON

By Jerry A. Matthews

Attorney

CLEANER

Filed March 21, 1933 3 Sheets-Sheet 2

Fig. 6.

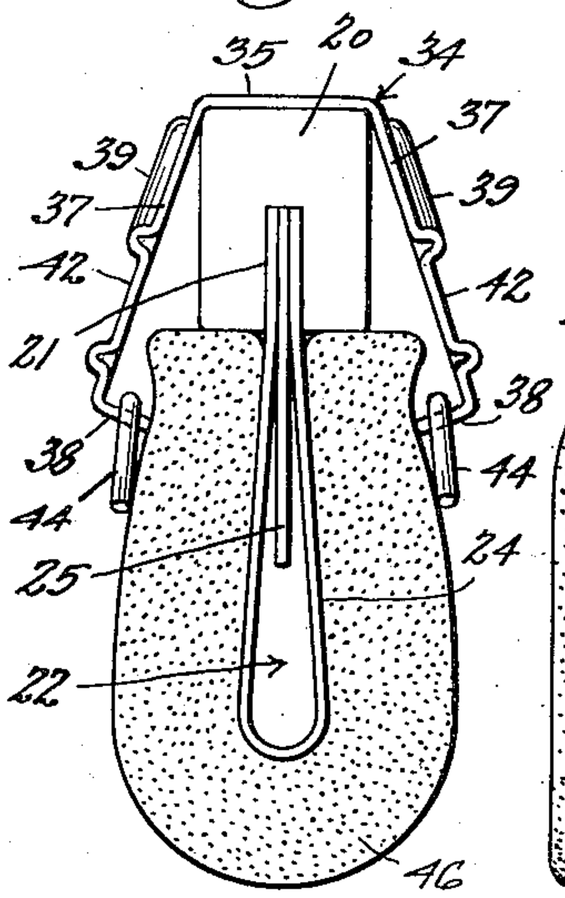

Fig. 7.

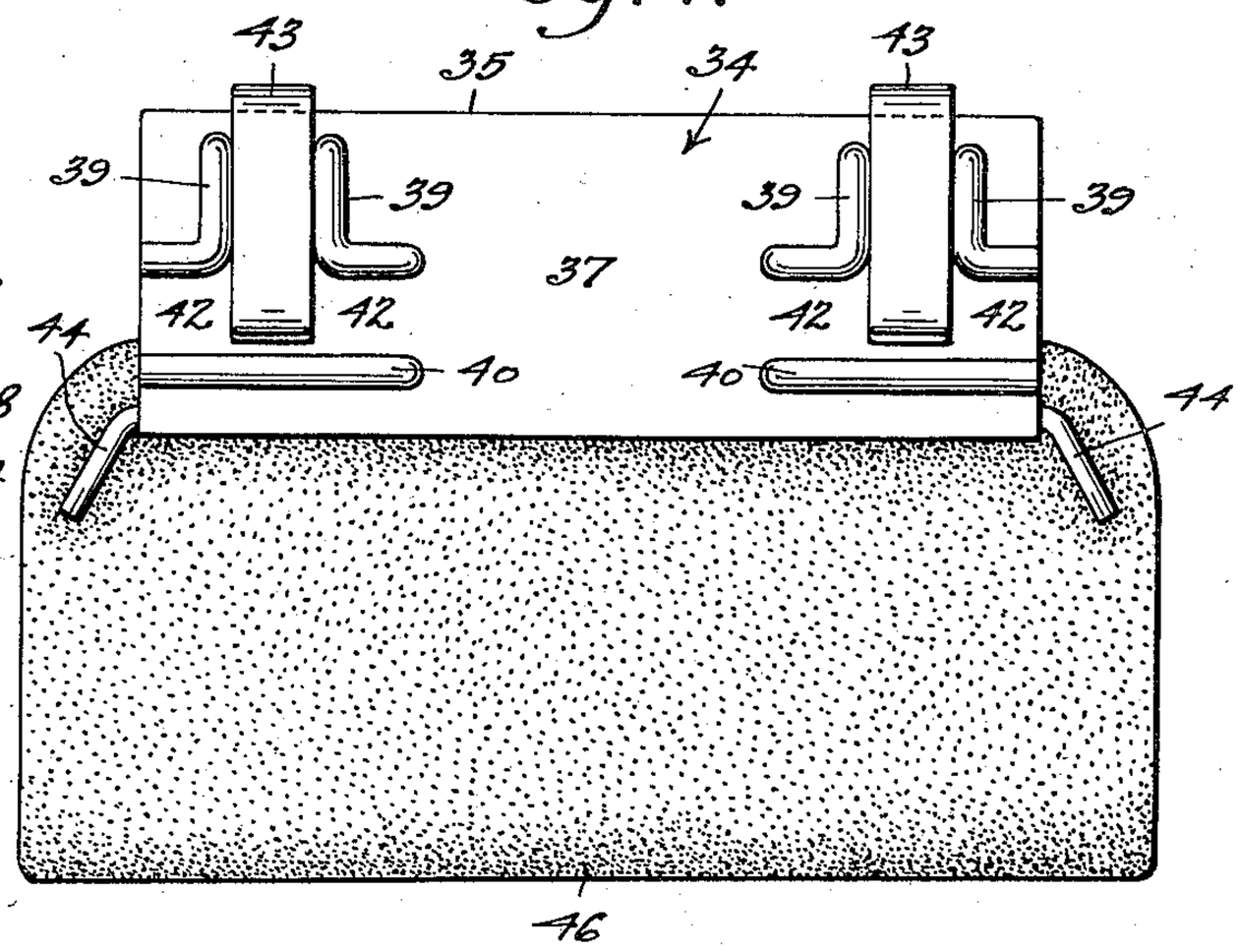

Fig. 8. Fig. 9. Fig. 10. Fig. 11. Fig. 12. Fig. 13.

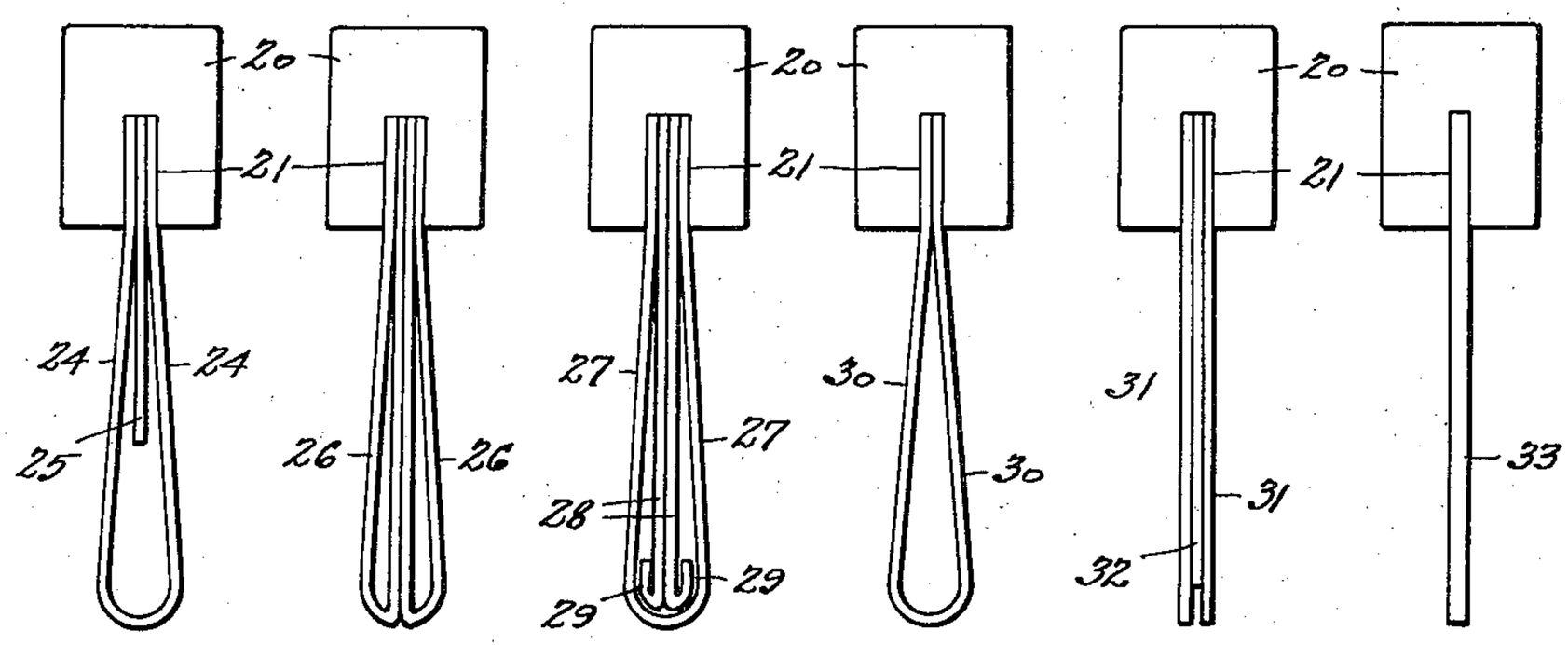

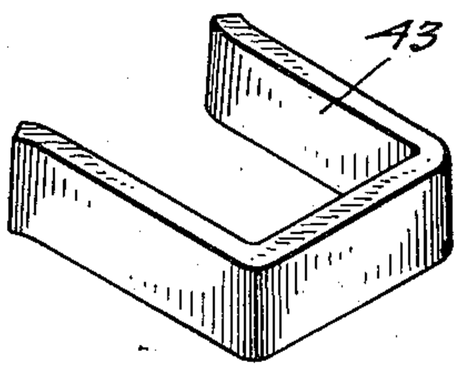

Fig. 14.

Inventor

W. S. JOHNSON

By Percy A. Mathews

Attorney

Aug. 20, 1935. W. S. JOHNSON 2,011,975

CLEANER

Filed March 21, 1933 3 Sheets-Sheet 3

Fig. 15.

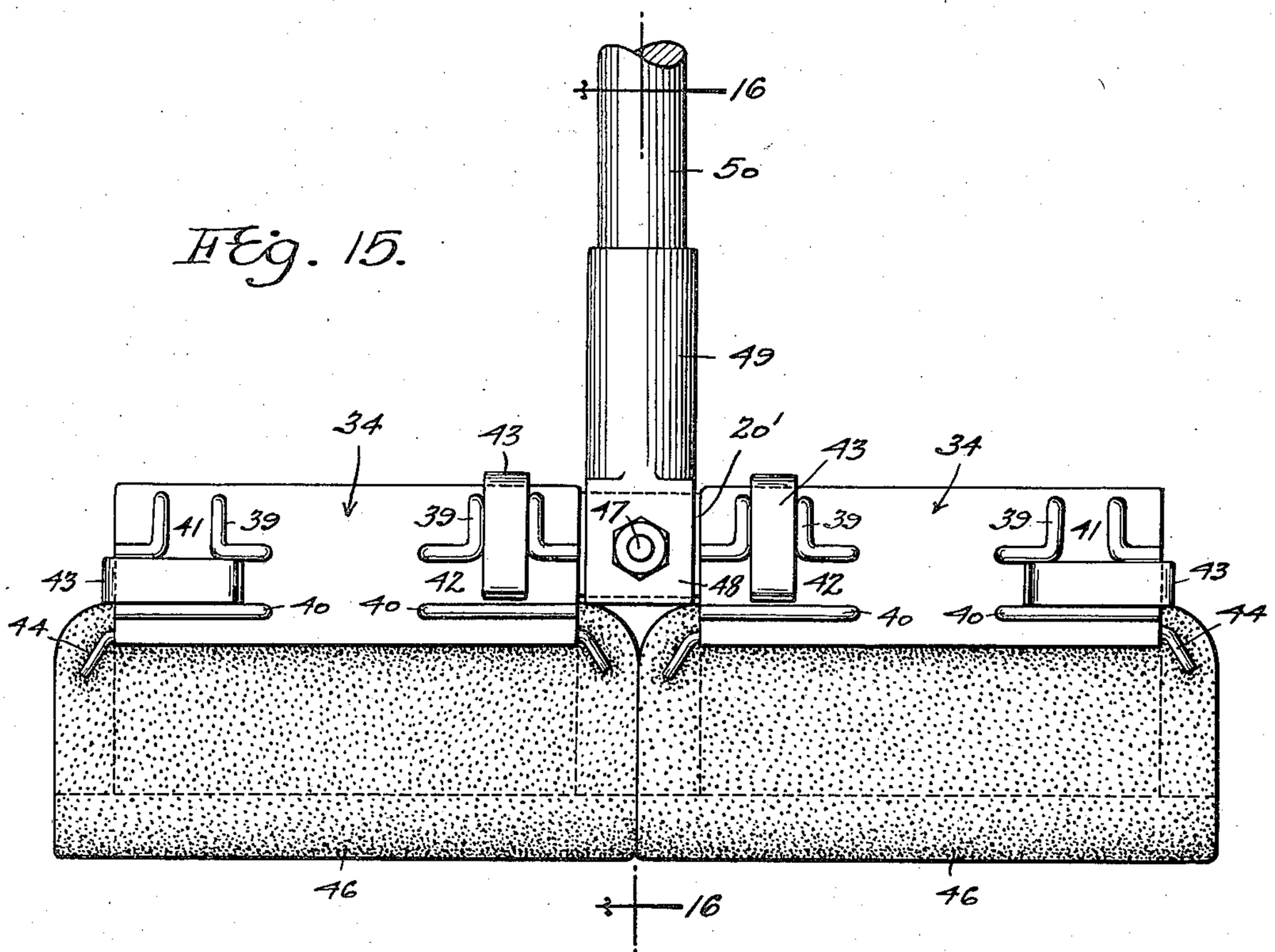

Fig. 16.

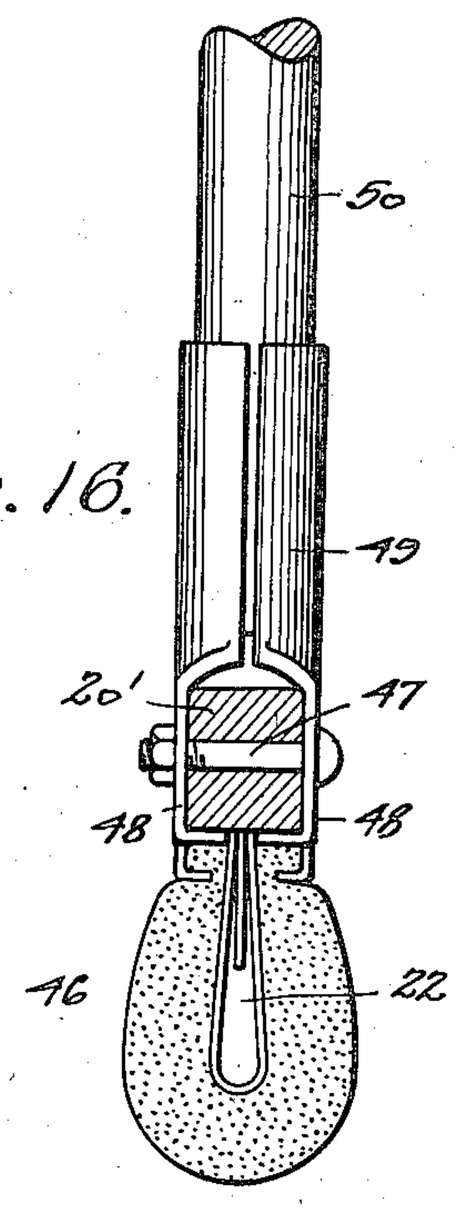

Fig. 17.

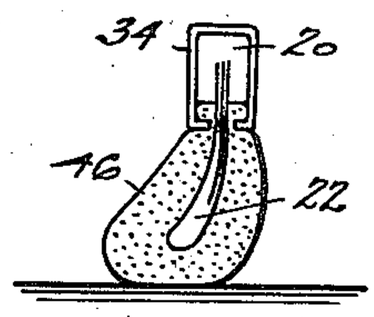

Fig. 18.

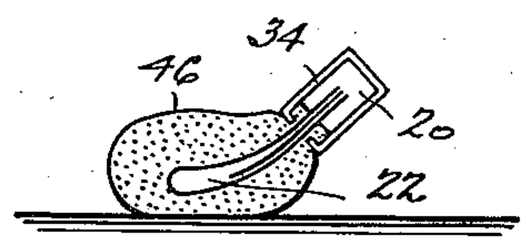

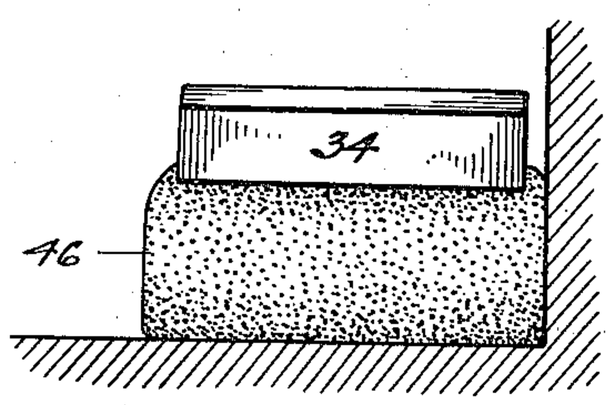

Fig. 19.

Inventor

W. S. JOHNSON

By Jerry A. Mathews

Attorney

Patented Aug. 20, 1935 2,011,975

UNITED STATES PATENT OFFICE

2,011,975

CLEANER

William S. Johnson, Boise, Idaho

Application March 21, 1933, Serial No. 661,907

9 Claims. (Cl. 15—231)

My invention relates to a cleaning device.

An important object of the invention is to provide a device of the above-mentioned character, having a large number of uses, such as cleaning automobile upholstery, furniture upholstery, hats, clothing, drapes, tapestry, handbags, luggage, suede shoes, spats, window shades, paintings, books, book-covers, chair seats and backs, formed of leather, fabric, or cane, and the like.

A further object of the invention is to provide a device of the above-mentioned character, so constructed that the cleaning element will be properly supported in use, whereby the cleaning element will bodily flex, to accommodate itself to the surface being cleaned.

A further object of the invention is to provide means whereby the cleaning element may be applied to the head of the device, quickly and conveniently.

A further object of the invention is to provide simple and reliable means for securing the cleaning element to the head and core of the device.

A further object of the invention is to provide a device of the above-mentioned character, having one or more square cleaning elements, which may be applied in four ways to the head and core, thereby increasing the life of the cleaning element and rendering the same more efficient.

A further object of the invention is to so construct the cleaning element holding member or clamp, that the same is interchangeable, in a single or double device embodying two of such holding members.

Other objects and advantages of the invention will be apparent during the course of the following description.

In the accompanying drawing, forming a part of this specification, and in which like numerals are employed to designate like parts throughout the same,

Figure 1 is a side elevation of a cleaning device embodying my invention,

Figure 2 is an end elevation of the same,

Figure 3 is a plan view of the same,

Figure 4 is a horizontal section taken on line 4—4 of Figure 1,

Figure 5 is a transverse section taken on line 5—5 of Figure 1,

Figure 6 is an end elevation of the device, showing the holding member in the open position,

Figure 7 is a side elevation of the cleaning device, showing the holding member in the closed position, and the locking clips applied vertically,

Figures 8 to 13, inclusive, are end elevations of different forms of flexible cores,

Figure 14 is a perspective view of the holding clip,

Figure 15 is a side elevation of a double cleaning device,

Figure 16 is a longitudinal section taken on line 16—16 of Figure 15,

Figure 17 is an end elevation of the cleaning device, showing the manner of flexing the cleaning element,

Figure 18 is a similar view showing a further flexing action, and,

Figure 19 is a side elevation illustrating the use of the cleaning device in a corner.

In the drawing, wherein for the purpose of illustration are shown preferred embodiments of the invention, attention being called first to Figures 1 to 14 inclusive, the numeral **20** designates a rigid head, which may be formed of wood or other suitable material. This head is elongated, straight, and rectangular in cross-section. This head is provided upon its lower face with a longitudinal groove **21**, receiving the upper edge of a relatively thin, suitably stiff, flexible, and resilient core **22**. This core has its upper edge held in place within the groove **21** by any suitable means, such as nails **23**, passing through one side of the head, as shown. The core **22** is preferably formed of sheet fibre, although other suitable material may be employed. As shown in Figures 5 and 8, the core may comprise an outer U-shaped portion **24**, reinforced by an inner portion or sheet **25**. In Figure 9, the core is shown as being formed of two U-shaped portions **26**, disposed in contacting relation. In Figure 10, the core embodies a U-shaped portion **27**, and inner portions or sheets **28**, having their outer ends bent laterally and inwardly, as shown at **29**.

In Figure 11, the core is formed of one U-shaped portion **30**. The core may also be formed of a plurality of sheets **31** and **32**, arranged in contacting relation, with the sheet **32** being disposed innermost Figure 12. In Figure 13, the core is formed of a single sheet **33**, which is somewhat heavier. In all forms of cores, the same are suitably stiff, flexible and resilient, and they may be formed of fibre, as explained.

Mounted upon the top of the head **20** is a resilient holding member **34**, formed of metal or the like. This member is generally U-shaped in cross-section and embodies a base **35**, which is attached to the top of the head **20** by screws **36**, and sides **37**. These sides are provided at their lower or free edges, with inwardly bent jaws or flanges **38**, disposed at substantially a right angle to the sides **37**, as shown. The sides **37** are pro-

vided with pairs of L-shaped outwardly bulging ribs 39, beneath which are arranged longitudinal ribs 40. The vertical portions of the ribs 39 form transverse or vertical guide passages 41, while the horizontal portions of the ribs 39 form with the ribs 40, horizontal or longitudinal guide passages 42. These passages are adapted for the reception of relatively rigid U-shaped clamps or clips 43, see particularly Figure 14. The free ends of these U-shaped clips may be slightly flared outwardly, if desired, although this flaring may be omitted.

The sides 37 carry clamping extensions 44, preferably formed from a rod or wire. These clamping extensions are rigid and are angularly disposed and have shanks 45, which extend within the sides 37 and are rigidly attached to the jaws or flanges 38 by spot-welding or the like.

The numeral 46 designates a cleaning element, which is compressible and flexible, and is preferably formed of sponge-rubber. This cleaning element is preferably in the form of a square, which is important, as it permits of a four-way application of the cleaning element to the core and head. The cleaning element is longer than the head and holding member 34, and projects outwardly beyond the same, as shown.

In the application of the cleaning element 46 to the core and head, the clips or clamps 43 are removed from the resilient holding member 34, and this resilient holding member is so tensioned that its sides 37 will automatically move to an open position, as indicated in Figure 6. The sides 37 must be slightly further opened by the fingers, before the ends of the cleaning element may be passed beneath the jaws 38, thereof. One side 37 is now slightly further opened, and one edge of the cleaning element 46 is passed beneath the jaw 38, and this side 37 is released, the jaw 38 of such side engaging with the cleaning element and pressing the same against the core 22, sufficiently to hold this edge of the cleaning element into position, while the cleaning element is completely passed about the core 22, and its opposite edge, in a similar manner, placed beneath the jaw 38 of the companion side 37. Both sides being now released, the jaws 38 will hold the cleaning element against displacement. It will be noted that the cleaning element completely encloses the core 22, and extends longitudinally beyond the same for a substantial distance, and the upper edges of the cleaning element abut against the shoulders produced by the head 20, upon opposite sides of the core. The sides 37 are now moved inwardly by pressing the same together by the hands or the like, until they substantially engage with the sides of the head 20, at which time the holding clips or clamps 43 are placed into position. These clips may be arranged horizontally within the guide passages 42, Figure 1, or they may be arranged vertically within the guide passages 41 Figure 7. When the sides 37 are thus held in the inner or closed position, the jaws 38 become embedded in the material of the cleaning element, and the clamp extensions 44 also become thus embedded. By having the jaws 38 and clamp extensions 44 embedded in the material of the cleaning element, and spaced from its free edges, these parts will not contact with the surface being cleaned.

The device thus described may be used without a handle, the operator grasping the head 20 in the hand. The cleaning element may be rubbed over the surface to be treated, either transversely, longitudinally or diagonally. The core will permit of the proper flexing of the cleaning element, which may have its edge or side moved over the desired surface, as clearly illustrated in Figures 17 and 18.

Figure 19 shows how the device may be used in a corner.

In Figures 15 and 16, I have illustrated a modification of the invention. In these figures, a head 20′ is provided, corresponding to the head 20, but elongated. Secured to the intermediate portion of the head 20′, by means of a bolt 47 or the like, are jaws 48, rigidly secured to a sleeve or ferrule 49, receiving one end of a handle 50. Two of the holding members 34 are mounted upon the head 20′, upon opposite sides of the sleeve 49, engaging with cleaning elements 46, surrounding the cores 22. All other parts of the device remain identical with those shown and described in connection with the first form of the invention. The outer clips or clamps 43 may be horizontally or vertically applied, while the inner clamps 43 must be vertically applied, as shown.

In view of the foregoing description, the operation and use of the second form of the invention is thought to be obvious.

It is to be understood that the forms of my invention herewith shown and described, are to be taken as preferred examples of the same, and that various changes in the shape, size and arrangement of parts may be resorted to without departing from the spirit of the invention, or the scope of the subjoined claims.

Having fully described my invention, what I claim is:

1. A cleaning device comprising an elongated head, a core secured to the head and projecting forwardly beyond the same, a flexible cleaning element to be mounted upon the core, a resilient holding member mounted upon the rear edge of the head and formed generally U-shaped in cross-section and having sides projecting forwardly beyond the head, said sides being provided with inwardly directed jaws to engage with the cleaning element, said sides being adapted to assume opened and closed positions and U-shaped clips for receiving the sides of the holding member to retain the same in the closed position.

2. A cleaning device comprising a head, a core secured to the head and projecting forwardly beyond the same with the head projecting laterally beyond the core upon opposite sides of the core to form shoulders, a cleaning element to be mounted upon the core with its edges arranged adjacent to the shoulders, a resilient holding member mounted upon the rear edge of the head and formed generally U-shaped in cross-section and embodying resilient sides on opposite sides of the head and extending forwardly thereof to a less extent than said core and terminating in inwardly directed jaws, said sides being tensioned to move outwardly to assume open positions which will require further opening movement of the sides for the insertion of the edges of the cleaning element beneath the jaws, said sides being adapted to be shifted to a closed position and means to hold the resilient sides in a closed position when moved thereto.

3. A cleaning device comprising a head, a core secured to the head for receiving thereon a flexible cleaning element, a holding member carried by the head and including oppositely arranged resilient sides having parts to engage with the cleaning element, said sides being adapted to assume opened and closed positions and being provided with means for forming guide passages,

and generally U-shaped clips having sides for insertion within the guide passages respectively, said clips serving to hold the sides of the holding member in the closed position.

4. A cleaning device comprising a head, a core secured to the head for receiving thereon a flexible cleaning element, resilient side plates secured to the head and having jaws to engage with the cleaning element, said plates being adapted to assume opened and closed positions and said side plates having guide passages respectively, and generally U-shaped clips having sides for insertion within the guide passages, said clips serving to hold the side plates in the closed position.

5. A cleaning device comprising an elongated head, a flexible core secured to the elongated head and extending throughout the major portion of the length of the head and projecting forwardly beyond the head, a flexible and compressible cleaning element folded about the core to engage with opposite sides of the same and extending longitudinally beyond the core at the ends of the core, resilient plates attached to the head and arranged upon opposite sides of the head and core and projecting forwardly beyond the head for engagement with the cleaning element, said plates terminating inwardly of the free ends of the cleaning element, said plates being adapted to assume opened and closed positions, clamping extensions carried by the plates and projecting longitudinally beyond the same for engagement with the cleaning element and adapted to be embedded therein at points inwardly of the free ends of the same, and means to hold the resilient plates in the closed position.

6. A cleaning device comprising an enlongated head provided upon its forward edge with a longitudinal groove, a core comprising a sheet of resilient material having its rear edge inserted into and held within the groove, a cleaning element engaging the opposite sides of the core, a clamping device mounted upon the head and formed generally U-shaped in cross-section and including a base engaging the rear edge of the head and clamping side elements disposed upon opposite sides of the head and engaging the cleaning element and adapted to be moved to an inner position, and means to retain the clamping elements in the inner position.

7. A cleaning device comprising a head provided upon its forward edge with a longitudinal groove, a generally U-shaped core comprising a resilient sheet bent upon itself with the free edges of the sheet held within the groove, a cleaning element engaging the opposite sides of the core, holding elements arranged upon opposite sides of the core and adapted to engage with the cleaning element when shifted to a closed position, and means to retain the holding elements in the closed position.

8. A cleaning device comprising a head provided upon its forward edge with a longitudinal groove, a core comprising a U-shaped resilient sheet, a resilient reinforcing sheet arranged within the U-shaped sheet, all of said sheets having their free edges held within the groove, a cleaning element engaging the opposite sides of the core, and adjustable means for connecting the cleaning element with the head and holding the same into engagement with the core.

9. A cleaning device comprising a head provided upon its forward edge with a longitudinal groove, a generally flat core comprising a plurality of resilient sheets, the free edges of the sheets being held within the groove, a cleaning element engaging the opposite sides of the core, and means to hold the cleaning element in engagement with the core.

WILLIAM S. JOHNSON.