US 20110209858A1

(19) United States

(12) Patent Application Publication

KONNO

(10) Pub. No.: US 2011/0209858 A1

(43) Pub. Date: Sep. 1, 2011

(54) **INDIRECT EVAPORATIVE COOLING APPARATUS**

(75) Inventor: **Kenichi KONNO**, Sendai-shi (JP)

(73) Assignee: **Earthclean Tohoku Co., Ltd.**, Sendai-shi (JP)

(21) Appl. No.: **13/034,447**

(22) Filed: **Feb. 24, 2011**

(30) **Foreign Application Priority Data**

Feb. 26, 2010 (JP) ..... 2010-001742 U

Publication Classification

(51) **Int. Cl.**
F28D 7/02 (2006.01)

(52) **U.S. Cl.** **165/164**

(57) **ABSTRACT**

An indirect evaporative cooling apparatus in which a substrate is disposed between a wet channel used to induce an evaporation phenomenon and a dry channel through which cooled air passes, the wet channel and the dry channel are arrayed in layers in an alternating manner, the substrate is cooled by the evaporation phenomenon occurring within the wet channel, substrates that cool the air in the dry channel by heat transfer are layered and disposed, wherein the substrate forming the wet channel and the dry channel is formed by a plastic sheet; a substrate is used in which a plurality of projections are formed as spacers on one side of the substrate of the wet channel and the dry channel, and numerous projections are formed by emboss-patterning on the surface of the substrate on which the spacers are formed and dimples are integrally formed on a back surface.

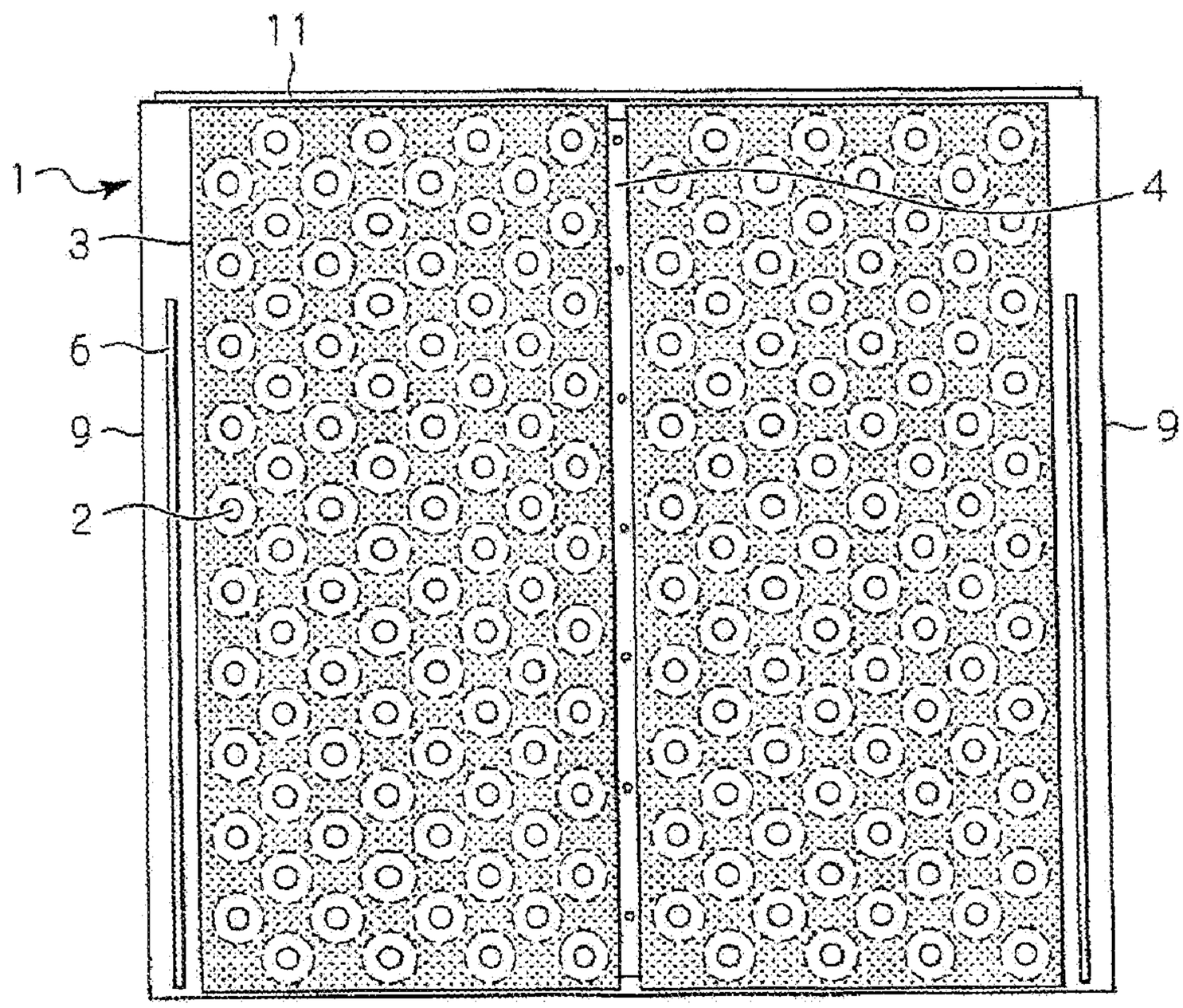

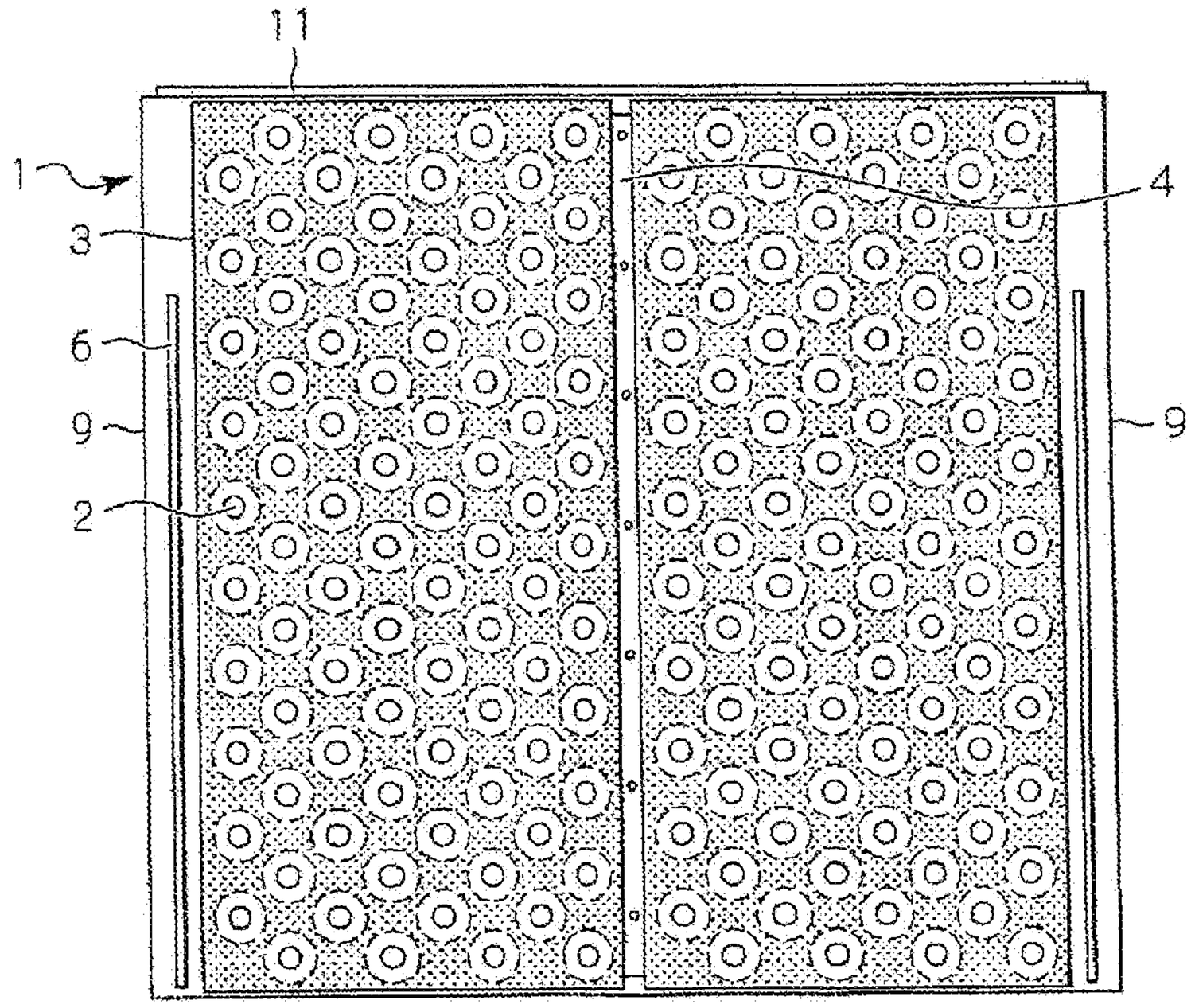

FIG.1

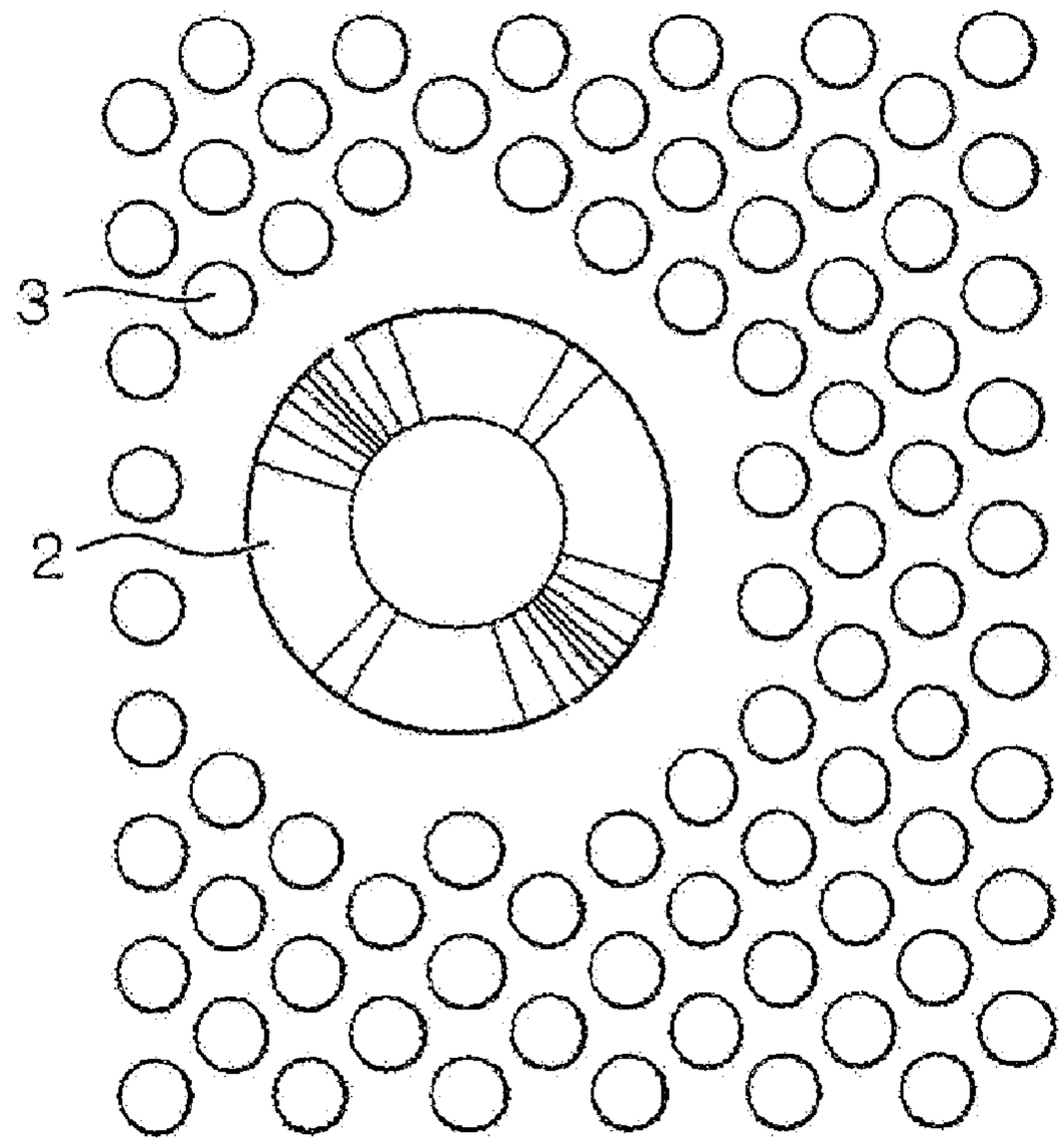

FIG.2

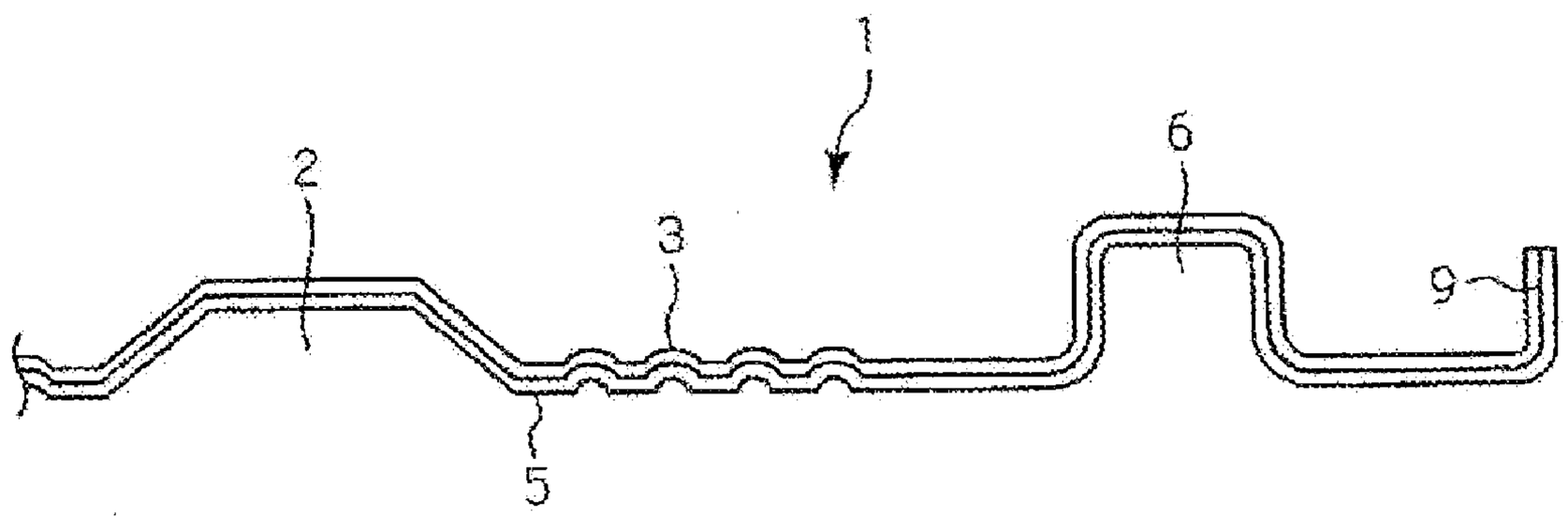

FIG.3

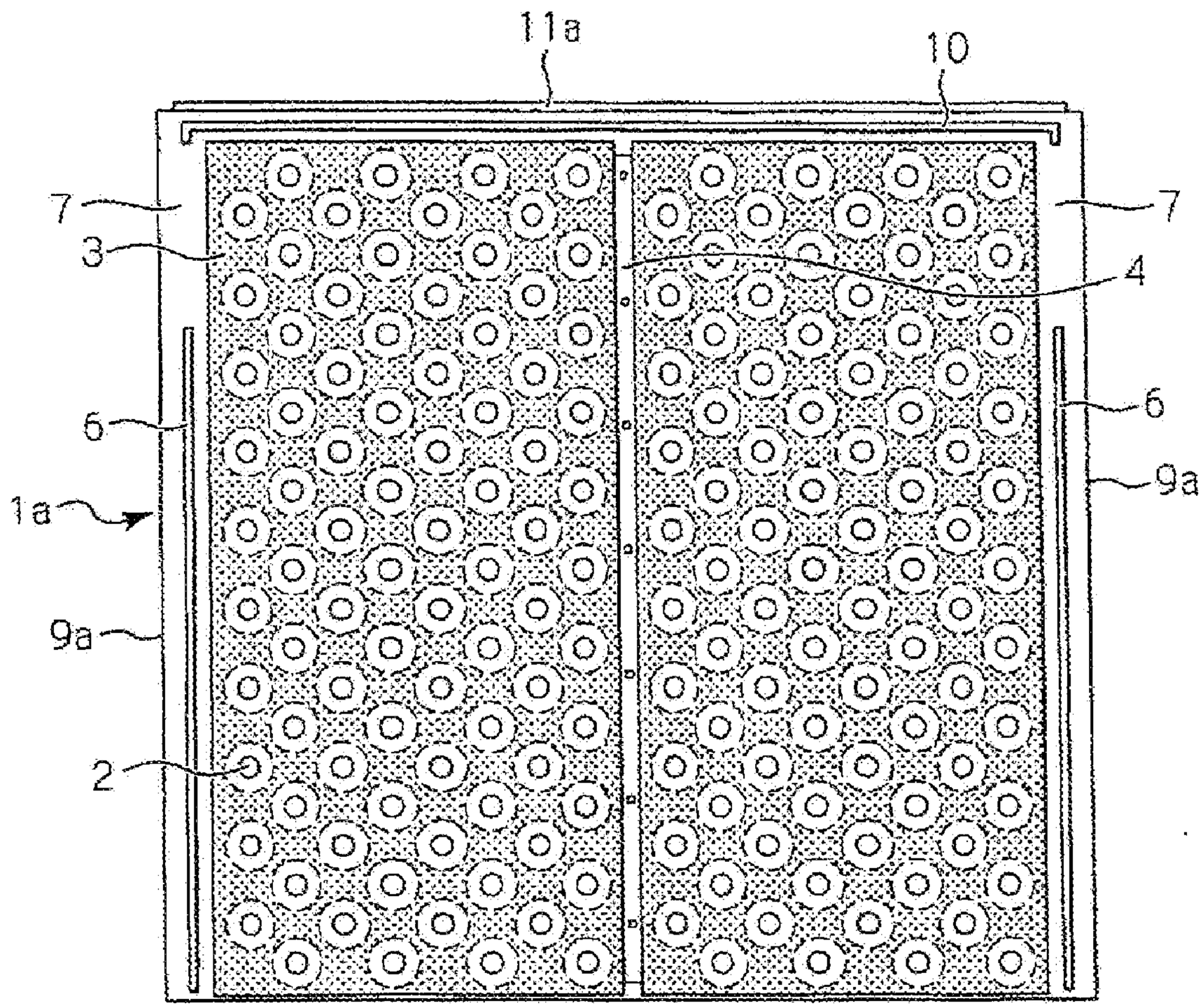

FIG.4

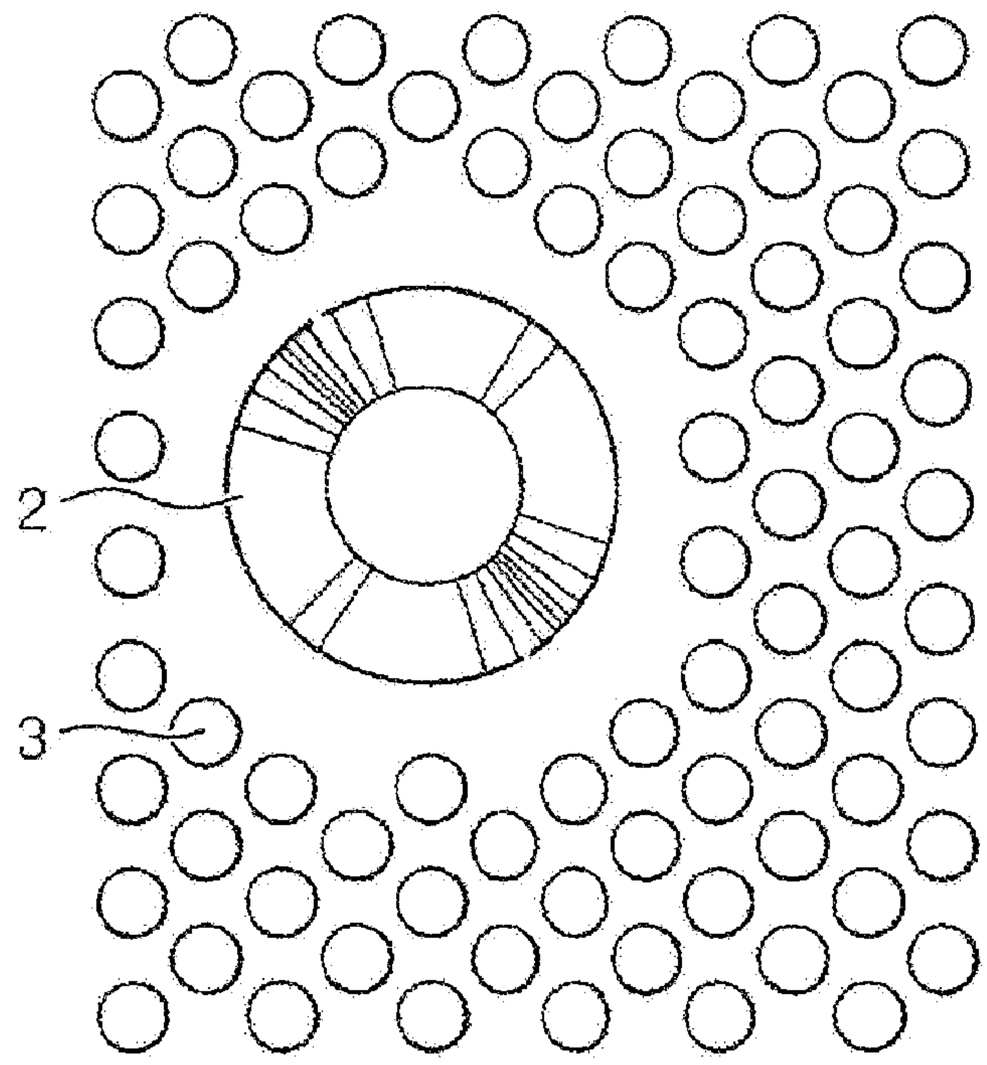

FIG.5

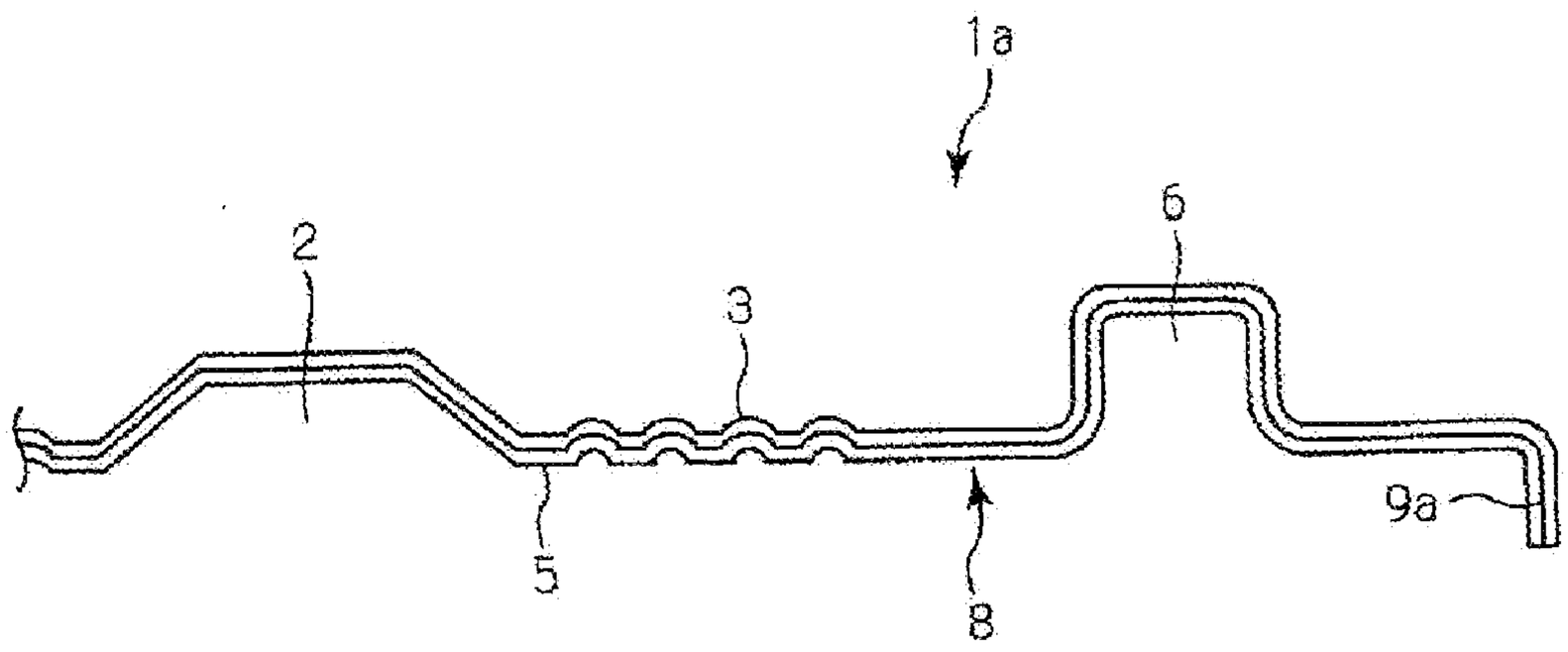

FIG.6

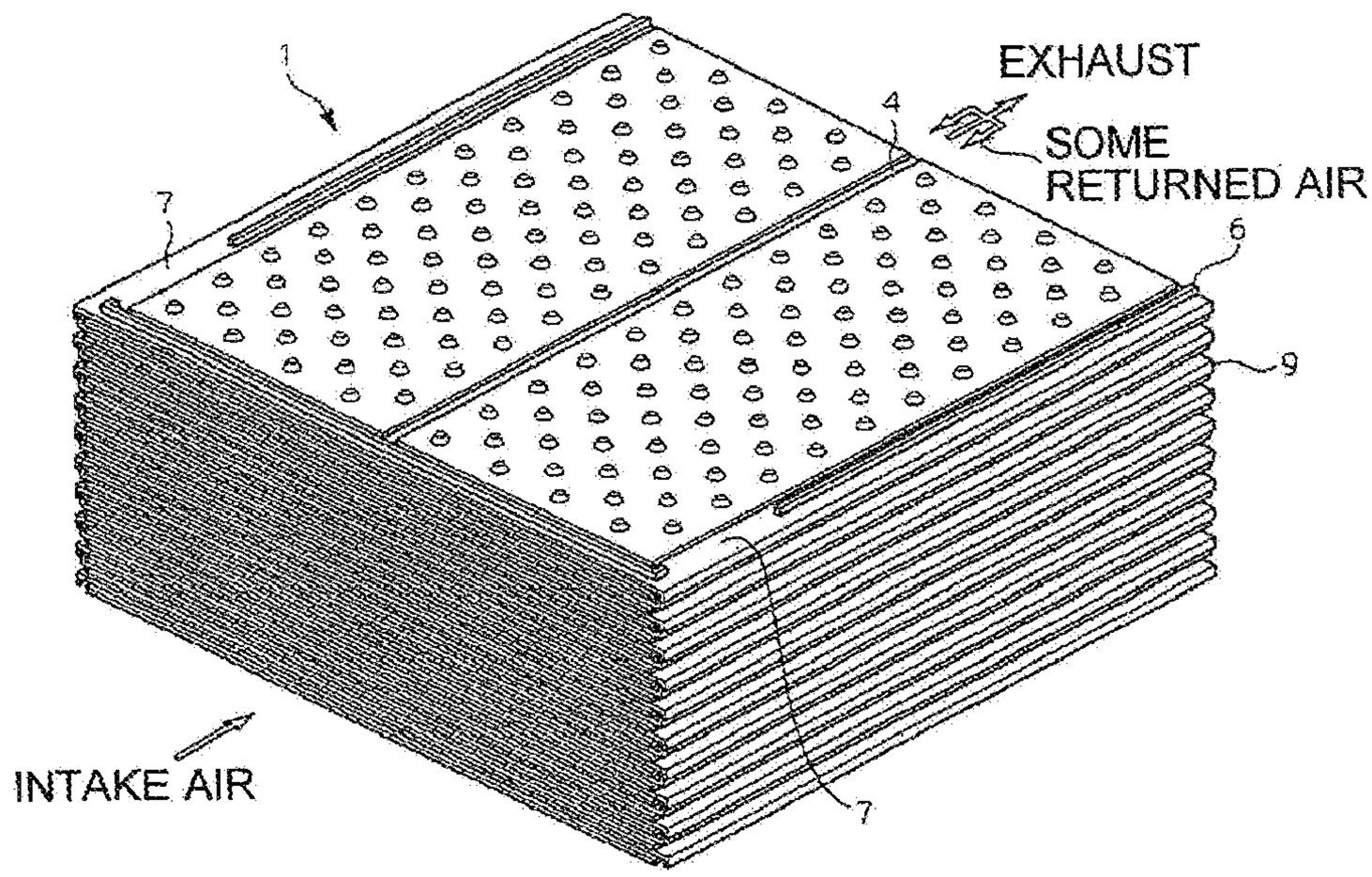
1
EXHAUST
4
SOME
RETURNED AIR
7
6
9
INTAKE AIR
7

FIG.7

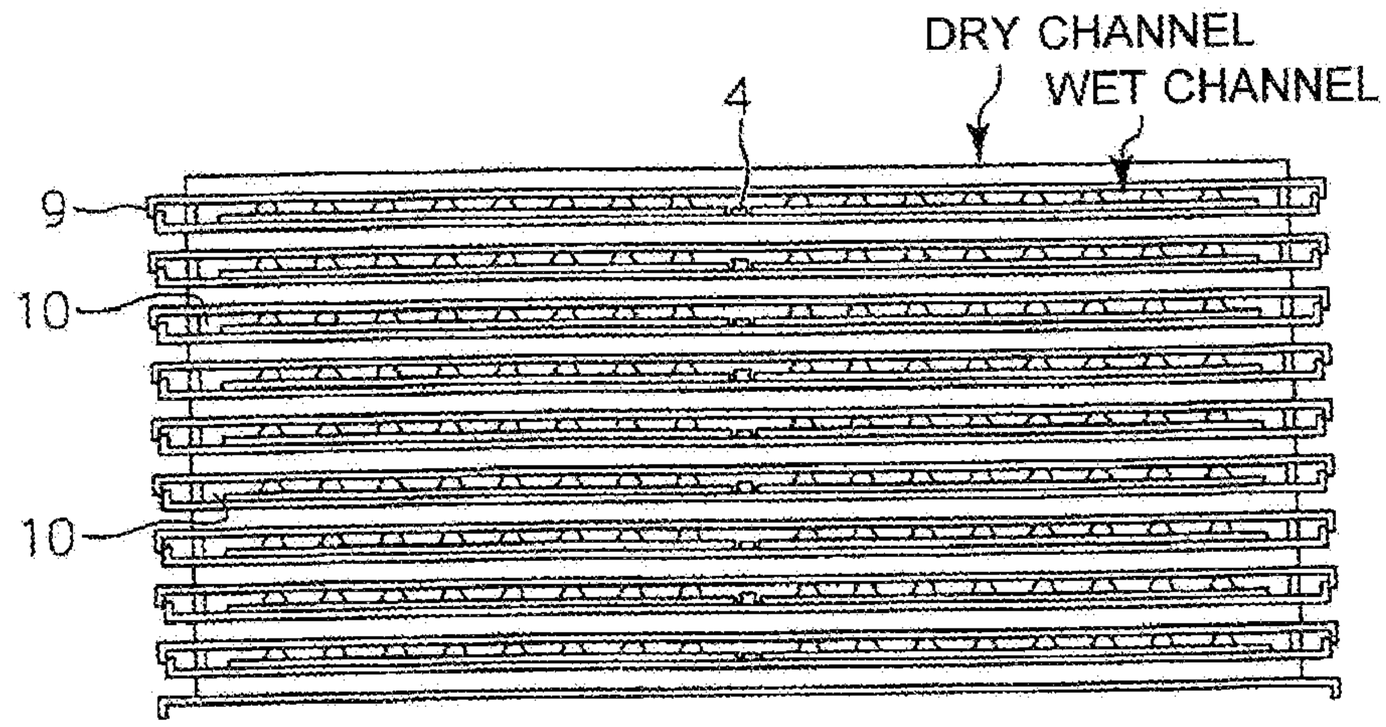
DRY CHANNEL
WET CHANNEL
4
9
10
10

FIG.8

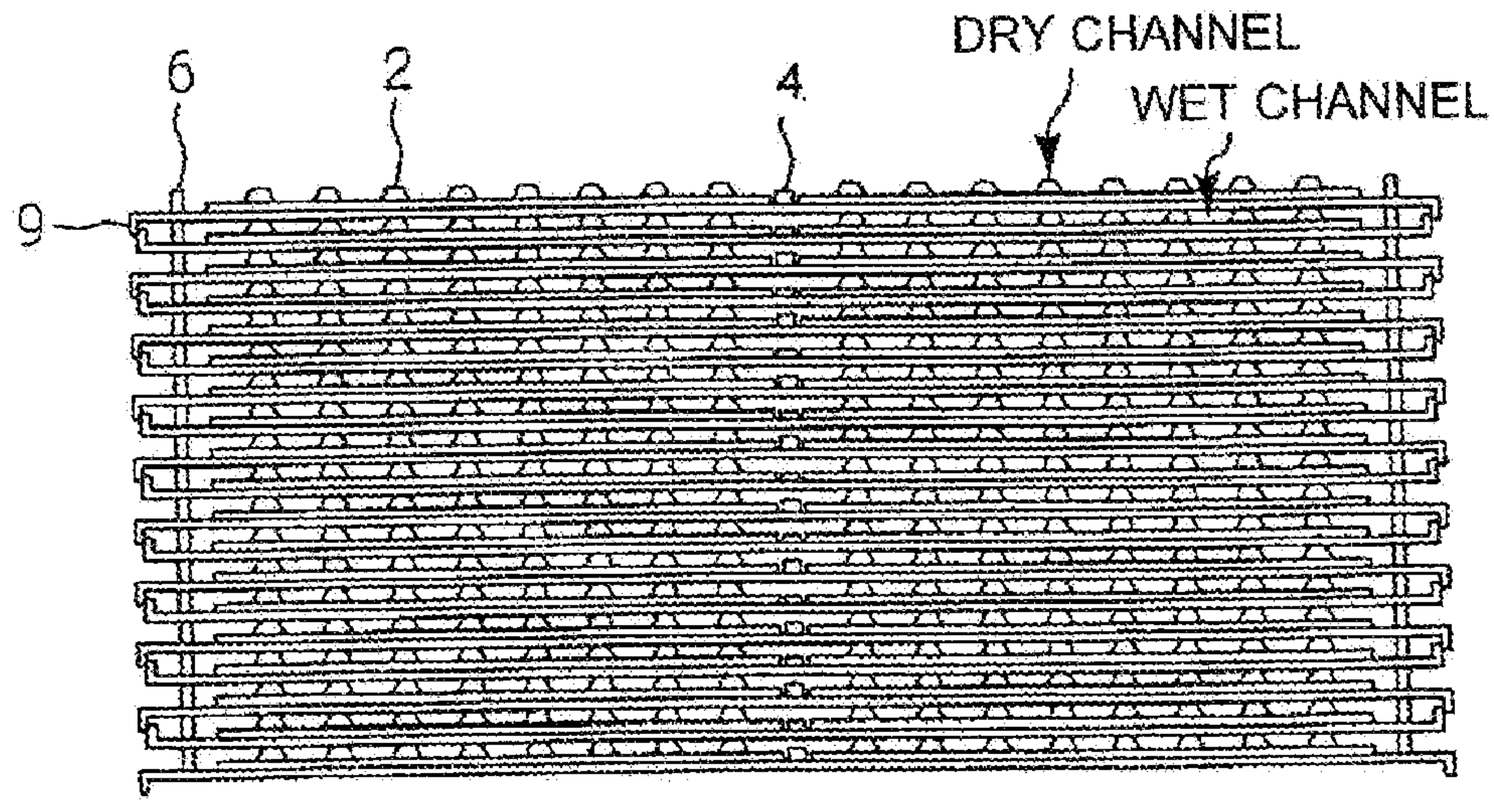

FIG.9

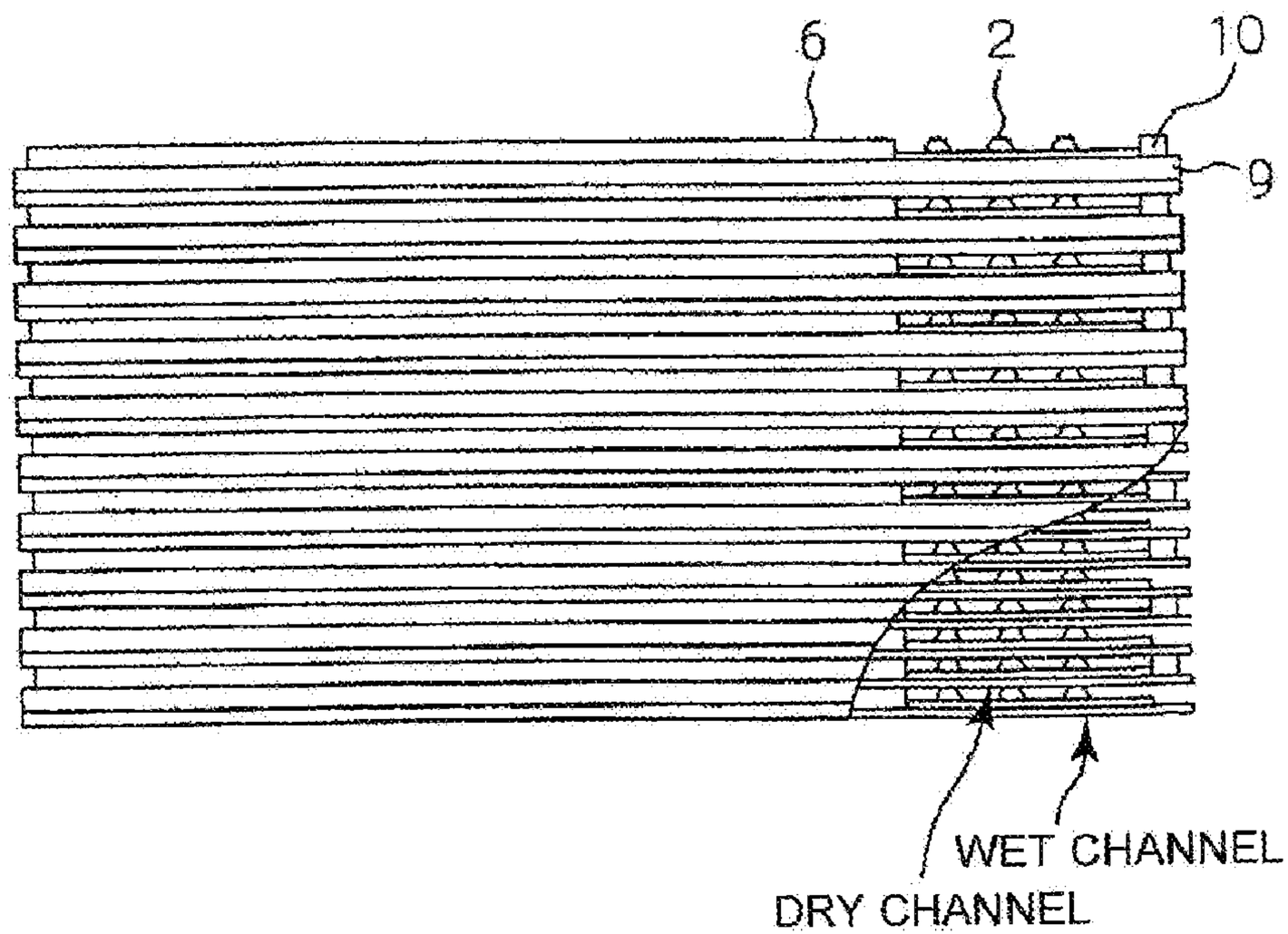

FIG.10

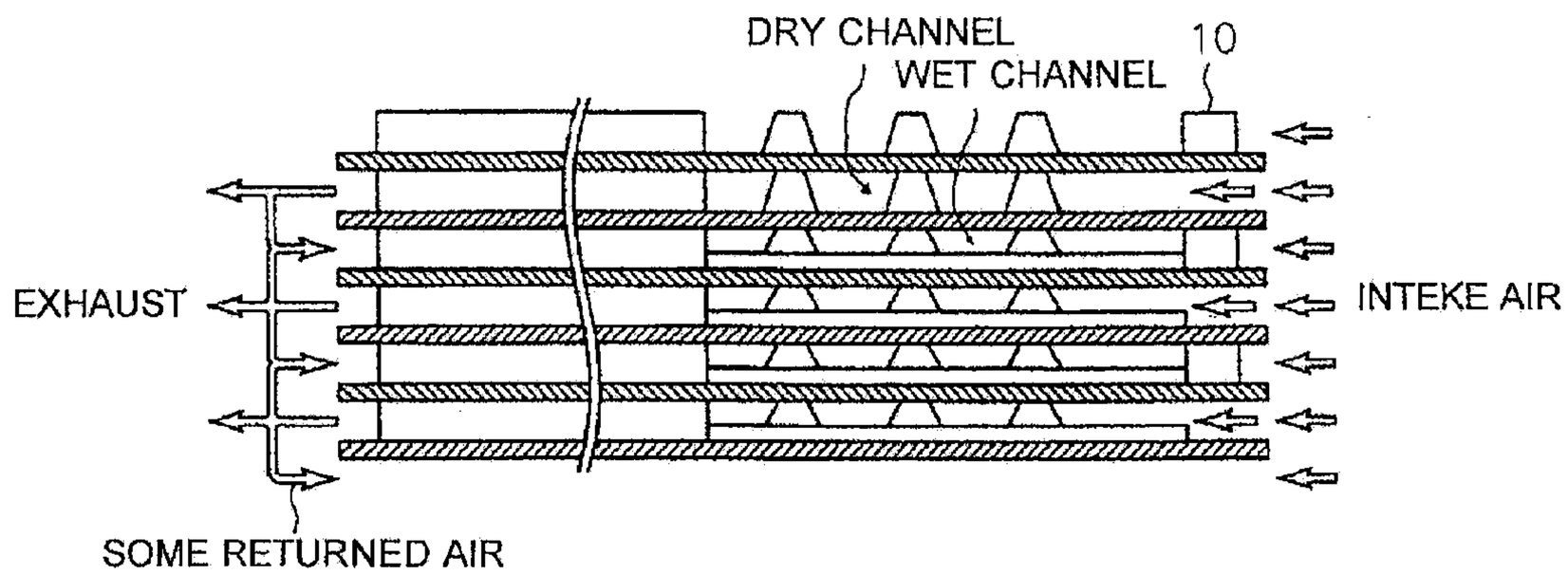
DRY CHANNEL
WET CHANNEL
10
EXHAUST
INTEKE AIR
SOME RETURNED AIR

FIG.11

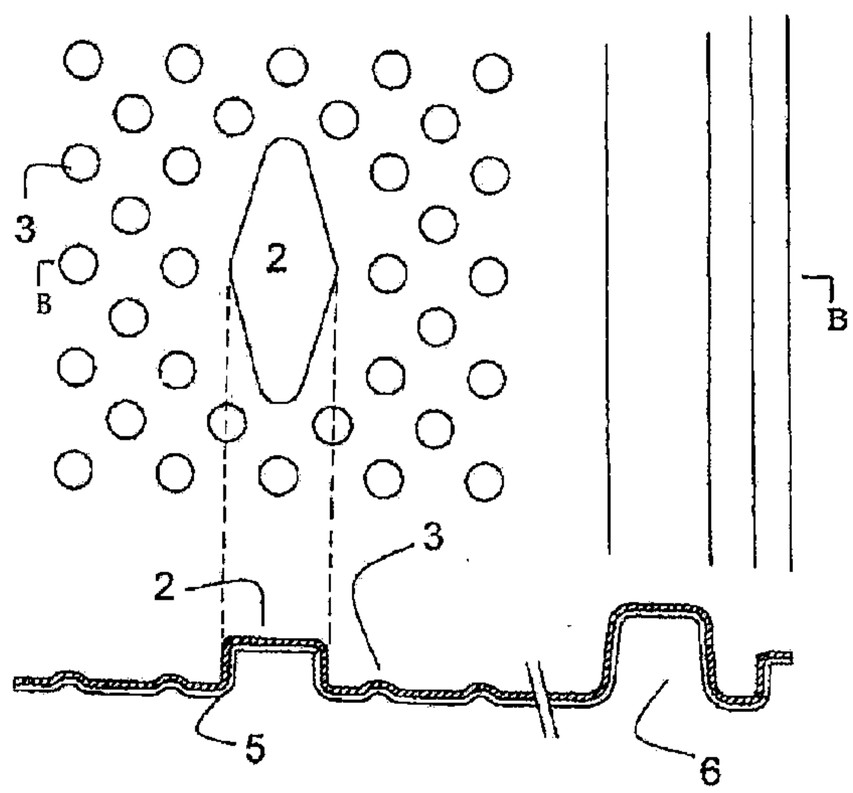
3
B
2
B
2
3
5
6

FIG.12

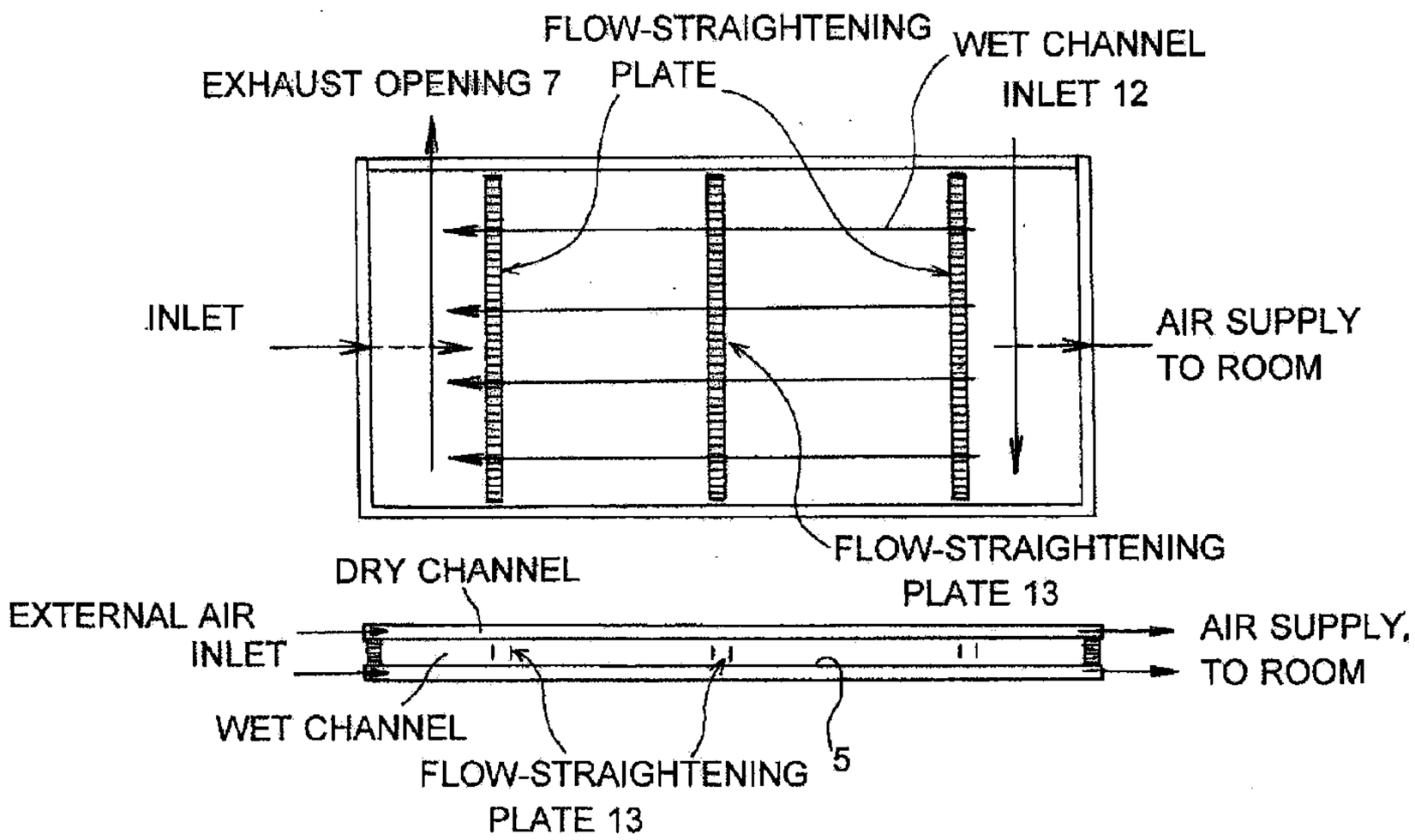
FLOW-STRAIGHTENING PLATE
WET CHANNEL INLET 12
EXHAUST OPENING 7
INLET
AIR SUPPLY TO ROOM
FLOW-STRAIGHTENING PLATE 13
DRY CHANNEL
EXTERNAL AIR INLET
AIR SUPPLY, TO ROOM
WET CHANNEL
FLOW-STRAIGHTENING PLATE 13
5

FIG.13

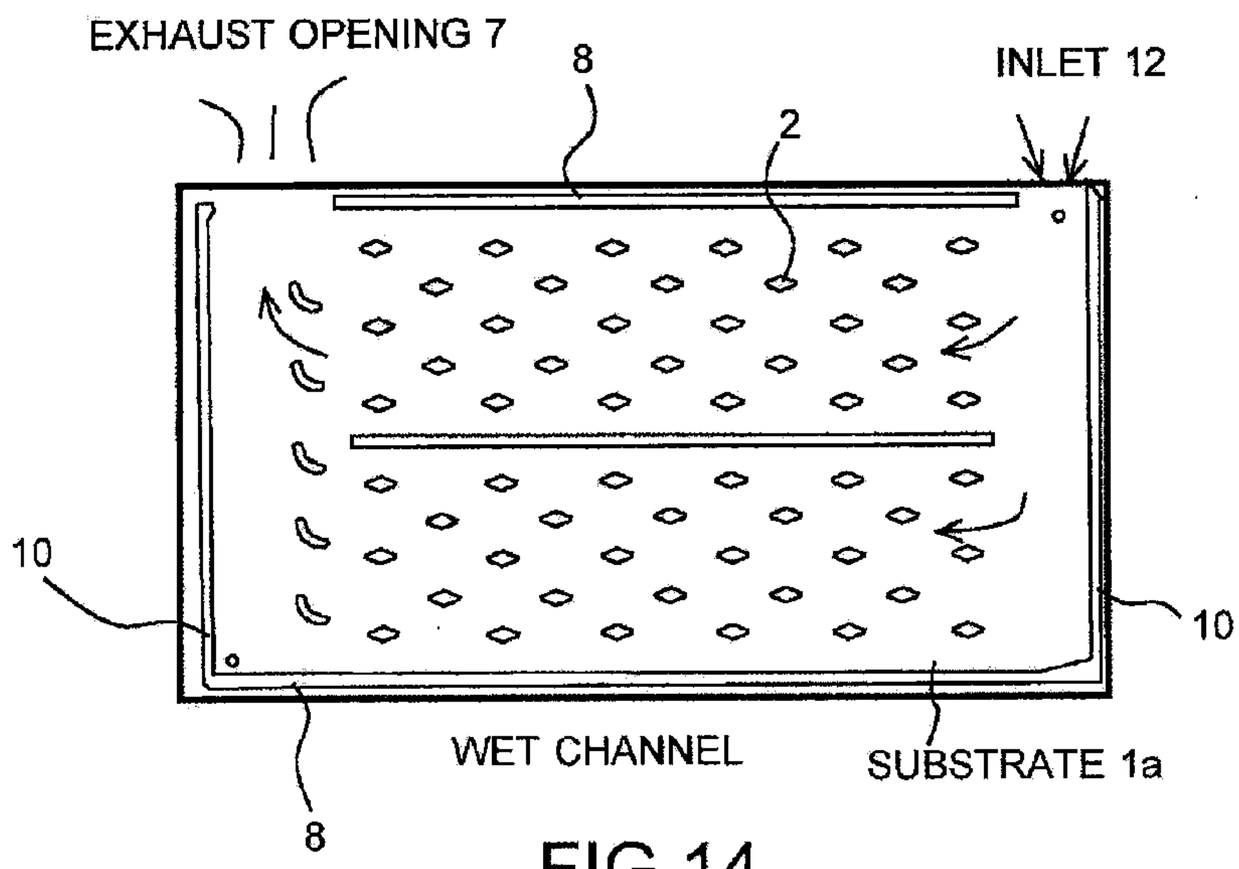
EXHAUST OPENING 7
8
2
INLET 12
10
10
WET CHANNEL
SUBSTRATE 1a
8

FIG.14

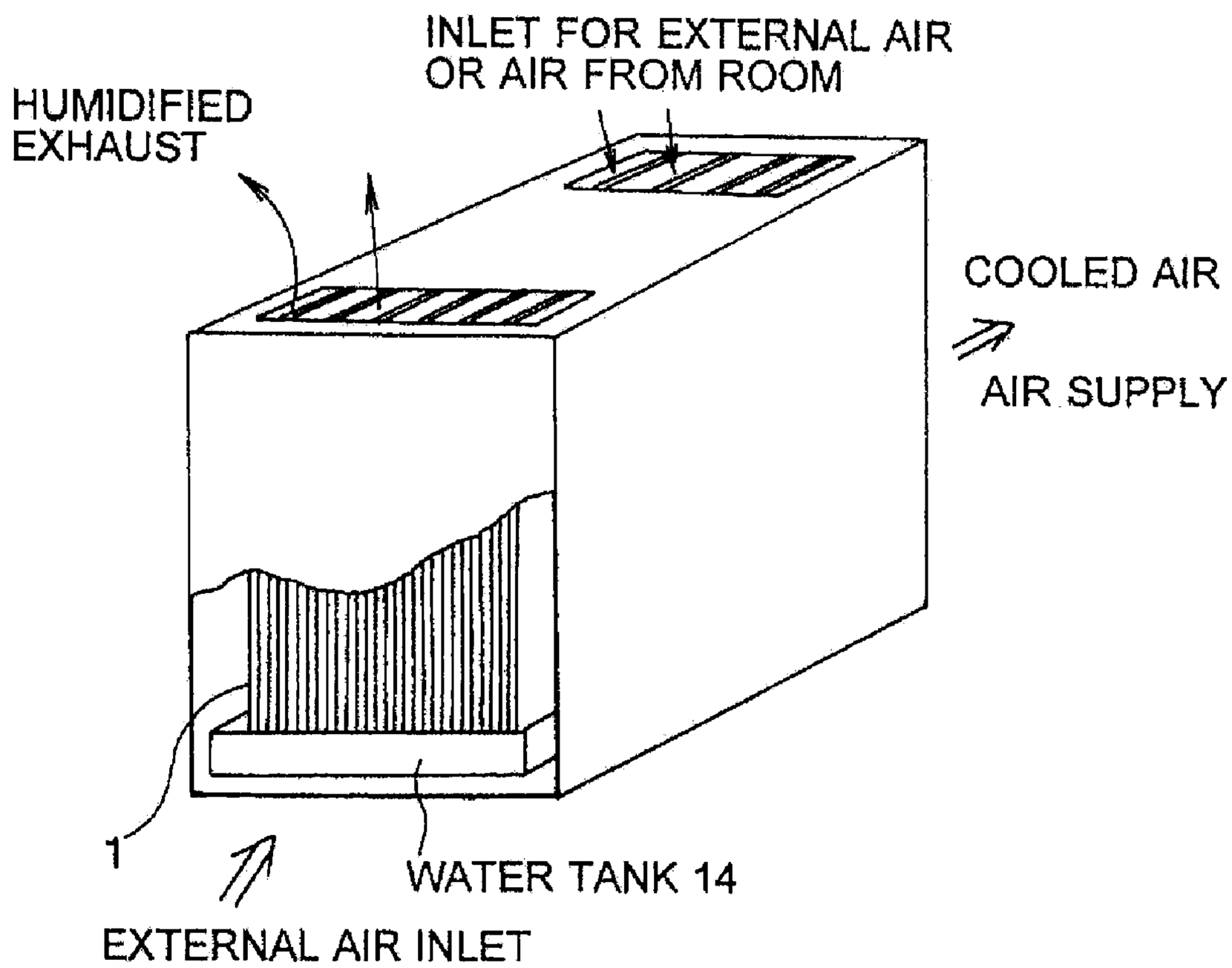
INLET FOR EXTERNAL AIR
OR AIR FROM ROOM
HUMIDIFIED
EXHAUST
COOLED AIR
AIR SUPPLY
1
WATER TANK 14
EXTERNAL AIR INLET

FIG.15

INDIRECT EVAPORATIVE COOLING APPARATUS

TECHNICAL FIELD

[0001] The present invention relates to an indirect evaporative cooling apparatus in which a wet cooling zone (wet channel) layer and a cooled air zone (dry channel) layer used in an indirect evaporative cooler are alternately disposed, and only sensible heat in the air in the cooled air zone is cooled.

BACKGROUND ART

[0002] When air is humidified, an evaporation phenomenon occurs and latent heat is removed, thereby lowering the temperature of the air to its wet-bulb temperature. However, cooled air is humidified at the same time. This principle is widely known as wet cooling by the following patent literatures and the like. Evaporative coolers using this principle are widely manufactured and distributed. For instances where humidification of the air discharged from the cooler is not desired, so-called indirect evaporation coolers are already being manufactured and distributed. The indirect evaporation cooler is a product that uses a system in which a zone in which wet cooling is performed (wet channel) and a zone through which cooled air passes (dry channel) are separated. The temperature lowered in the wet cooling zone is transmitted to the cooled air zone by heat exchange and only sensible heat in the air in the cooled air zone is cooled.

[0003] In an invention described in Japanese Patent Unexamined Application Publication No. 2004-513320(WO02/27254), numerous circulation holes are provided in a substrate disposed at the border between each channel. Air flows into respective adjacent channels by direct flow. A cooling apparatus described in Japanese Patent Laid-open Publication No. 2007-147117 includes a partition member and a shape retention member. The partition member, sandwiched between layered heat exchange members, forms a space between the heat exchange members. The partition member serves as a partition between the heat exchange members, and forms a first air flow path and a second air flow path. The shape retention member presses, in a layering direction, an element structure configured by the partition members and the heat exchange members being layered. The first air flow path (flow of cooled air) and the flow of air into the heat exchange members (wet zone) are direct. In addition, a substrate is provided with numerous holes and has a zig-zagged shape. A structure such as this has poor heat efficiency. A large apparatus is required for installation in a store, such as a convenience store. The cooling apparatus cannot be installed in an ordinary home. As the heat exchange members, stripe-shaped projections that regulate the flow of fluids are arrayed on the surface as spacers.

[0004] An invention described in Japanese Patent Laid-open Publication No. 2002-286391 is related to a common heat exchanger. In the heat exchanger, a first heat transfer plate and a second heat transfer plate that are layered have a heat transfer surface, a first rib section, a first groove section, and a second groove section. The heat transfer surface performs heat exchange between a fluid flowing through a first air duct and a fluid flowing through a second air duct, the first air duct and the second air duct being formed by the first heat transfer plate and the second heat transfer plate. The first rib section that defines the first air duct and the second air duct is formed on the outer periphery of the first heat transfer plate and the second heat transfer plate in the shape of a hollow rib on the heat transfer surface, leaving outlet and inlet portions in the first air duct and the second air duct. The first rib section has an outer side surface that is formed bent back in a direction opposite of the direction in which the first rib section projects. The first groove section is formed on the upper surface of the first rib section. The first groove section enhances the strength of the first rib section and, at the same time, serves as a seal, between the first heat transfer plate and the second heat transfer plate, excluding the outlet and inlet portions of the first air duct and the second air duct. The second groove section is formed on the heat transfer surface in the outlet and inlet portions of the first air duct and the second air duct. The second groove section serves as a seal for portions other than the outlet and inlet portions of the first air duct and the second air duct by being overlapped with the first groove section when the first heat transfer plate and the second heat transfer plate are layered. At the same time, the second groove section enhances the strength of the outlet and inlet portions of the first heat transfer plate and the second heat transfer plate. A bent portion is formed on the outer peripheral edges of the first heat transfer plate and the second heat transfer plate such as to cover the outer side surface of the first rib section by being in close contact with the outer side surface of the first rib section. As pointed out by the Examiner, "a plurality of projections **105** serving as spacers, are formed on one surface of each heat transfer plate **1** and **2** in a heat exchanger in which numerous heat transfer plates are alternately layered" is described. However, the projections **105** are spacers formed into a stripe shape that regulates the flow of fluid. Furthermore, sealing is achieved by a rib section and a groove section being fitted together.

[0005] An invention described in Japanese Patent Laid-open Publication No. Heisei 06-313693 relates to a corrugated board-shaped heat exchanger element. In the heat exchanger element, small spacer pieces (**2**) are provided on at least one surface of a sheet substrate (**1**), such as craft paper, in the form of lattice point. Partition pieces (**3**) are provided in a rib shape on two opposing side edges of the sheet substrate (**1**). Numerous unit sheets (**4**) obtained in this way are stacked into multiple layers such that the direction of the partition pieces (**3**) of each unit sheet (**4**) alternates with every sheet. In the heat exchanger element, numerous small spacer pieces are arrayed in a lattice form on a surface of a sheet substrate having moisture permeability, such as paper or non-woven fabric, and partition pieces are formed in a rib shape.

[0006] An invention described in Japanese Patent Laid-open Publication No. 2007-502962 relates to a plate-type heat exchanger (**10**) including a plurality of plates (**24**), an, inlet (**16** and **20**) and an outlet (**18** and **22**), and a plurality of miniscule surface features (**56**). In the plate-type heat exchanger (**10**), opposing surfaces and peripheral flanges of a pair of adjacent plates among the plurality of plates (**29**) define the respective flow paths of at least two fluids (**17** and **21**). Thermal communication between the two fluids is performed on both surfaces of the plates (**24**). The inlet (**16** and **20**) and the outlet (**18** and **22**) are provided for each of the at least two fluids (**17** and **21**) in fluid communication with the respective flow paths of the fluids. The miniscule surface features (**56**) improve heat transfer between at least two fluids (**17** and **21**) and are in fluid communication with at least a portion of at least one flow path of at least one fluid. At least one plate forms a portion of the fluid path border. A flow path space is formed by wave-shaped plates being adhered

together. Therefore, the miniscule surface features **56** are required to improve thermal efficiency.

DISCLOSURE OF INVENTION

Problem to be Solved by the Invention

[0007] However, a combinational structure of layered Substrate sheets disposed within the indirect evaporative cooling apparatus of the present invention completely differs from those in the above-described inventions.

[0008] In the indirect evaporative cooling apparatus of the present invention, although lowering the temperature of the cooled air to the dew-point temperature thereof is theoretically possible, following issues arise in actualization in an actual apparatus:

[0009] (1) causing the evaporation phenomenon to occur to a maximum degree in the wet channel;

[0010] (2) transmitting cooling heat generated in the wet channel to the cooled air passing through the dry channel with maximum heat exchange efficiency;

[0011] (3) minimizing pressure loss in the apparatus when considering commercialization, because the apparatus suctions air;

[0012] (4) using a manufacturing method suitable for mass production at a low cost; and

[0013] (5) minimizing the amount of water consumption required to induce the evaporation phenomenon.

[0014] The indirect evaporative cooling apparatus of the present invention has been achieved to actualize modifications to improve the above-described issues.

[0015] An object of the present invention is to provide an indirect evaporative cooling apparatus that is compact, has good cooling efficiency, and is low in cost.

Means for Solving Problem

[0016] To achieve the above-described object, an indirect evaporative cooling apparatus according to an aspect of the present invention is an indirect evaporative cooling apparatus in which a substrate is disposed between a wet channel used to induce an evaporation phenomenon and a dry channel through which cooled air passes. The wet channel and the dry channel are arrayed in layers in an alternating mariner. The substrate is cooled by the evaporation phenomenon occurring within the wet channel. Substrates that cool the air in the dry channel by heat transfer are layered and disposed. In the indirect evaporative cooling apparatus, the substrate forming the wet channel and the dry channel is formed by a plastic sheet. A substrate is used in which a plurality of projections are formed as spacers on one side of the substrate of the wet channel and the dry channel. Numerous projections are formed by emboss-patterning on the surface of the substrate on which the spacers are formed and dimples are integrally formed on a back surface.

[0017] An indirect evaporative cooling apparatus according to an aspect of the present invention is an indirect evaporative cooling apparatus in which a substrate is disposed between a wet channel used to induce an evaporation phenomenon and a dry channel through which cooled air passes. The wet channel and the dry channel are arrayed in layers in an alternating manner. The substrate is cooled by the evaporation phenomenon occurring within the wet channel. Substrates that cool the air in the dry channel by heat transfer are layered and disposed. In the indirect evaporative cooling apparatus, the substrate forming the wet channel and the dry channel is formed by a plastic sheet. A substrate is used in which a plurality of projections are formed as spacers on one side of the substrate of the wet channel and the dry channel. Numerous projections are formed by emboss-patterning on the surface of the substrate on which the spacers are formed and dimples are integrally formed on a back surface. Air flow within the wet channel and air flow within the dry channel are counter-flows. In an exhaust opening for air that passes through each layered dry channel and is cooled, some of the air is sent into the adjacent wet channels using external static pressure. The air flow that is a counterflow to the air flow in the dry channel is created in the wet channel, and cool air is discharged from exhaust openings provided on both sides of the substrate.

[0018] In the indirect evaporative cooling apparatus, the plurality of spacers arrayed to form a space with a width and height of about 2 to 3 mm between adjacent substrates for air flow in each layered wet channel and dry channel are circular.

[0019] In the indirect evaporative cooling apparatus, on a wet channel surface of the substrate of the wet channel and the dry channel, a recess formed by embossing on the substrate is a dimple with a diameter of about 1.8 mm. The dimple straightens turbulent eddy of air blowing through the dry channel caused by the spacers formed in the substrate. The heat exchange area is increased by the dimples formed on the back surface.

[0020] In the indirect evaporative cooling apparatus, another exhaust opening is provided on a side opposite to the exhaust opening of the layered wet channels, and, return air from outside is sent into the wet channels.

[0021] In the indirect evaporative cooling apparatus, substrates in which a woven fabric or a non-woven fabric impregnated with an absorbing agent for absorbing water is included on the wet channel side of the substrate are layered.

[0022] A system for performing heat exchange between air and air in the indirect evaporative cooling apparatus of the present invention is broadly classified into a system using perpendicular flow, such as that described in Japanese Patent Unexamined Application Publication No. 2004-513320, above, a system using a co-current flow in which air is inserted into each channel from the same direction, and a system using counterflow in which the air flows are opposite between the wet channel and the dry channel.

[0023] In general, the heat exchange rate of the system using a co-current flow or the system using counterflow is greater than the one of the system using perpendicular flow. In general, the heat exchange rate of the system using a co-current flow is greater than the one of or the system using counterflow.

[0024] Through use of concurrent flow (including co-current flow and counterflow; the same applies hereafter) for air flow within the dry channel and the wet channel formed by the substrates being layered, manufacturing of the apparatus is simplified. An indirect evaporative cooling apparatus that can be compactly manufactured is preferably achieved.

[0025] Through use of concurrent flow for air flow passing through the wet channel and the dry channel (see FIG. **13**), air from the room may be reused as air supplied to the wet channel.

EFFECT OF THE INVENTION

[0026] In the indirect evaporative cooling apparatus of the present invention, a plurality of spacers are formed on a surface of a substrate positioned on a border between a wet

channel and a dry channel. In addition, numerous projections are formed by embossing on the surface of the substrate surface (forming dimples on the back Surface). Therefore, space allowing air flow can be maintained with certainty. Because surface area is increased by the projections, heat exchange efficiency is excellent. Moreover, as a result of weight reduction due to the use of plastic, the overall indirect evaporative cooling apparatus can be configured to be light in weight.

[0027] Because counterflow is used for the air flows within the wet channel and the dry channel, cooled air can be efficiently sent into a room. Furthermore, heat exchange efficiency is increased when a counterflow system is used in which some of the exhaust from the dry channel is returned and sent into the wet channel.

[0028] Through use of a porous plastic sheet as the substrate in the indirect evaporative cooling apparatus of the present invention, weight reduction can be achieved. In particular, as a result of a water absorbing structure, such as a woven fabric including a water absorbing agent, being formed on the wet channel side surface of the substrate, efficiency attributed to the evaporation phenomenon is high.

[0029] (1) The following data was obtained in comparison with existing perpendicular-type indirect evaporative coolers:

[0030] (a) cooling effect was increased by about 30%; and

[0031] (b) internal pressure loss was about ⅓.

[0032] (2) A system in which molded plastic parts are used as the substrates for the wet channel and the dry channel can be used. Mass production is facilitated, and the indirect evaporative cooler can be manufactured at a low cost.

BRIEF DESCRIPTION OF DRAWINGS

[0033] FIG. **1** is a planar view of a substrate for a dry channel used in an indirect evaporative cooling apparatus according to a first embodiment of the present invention;

[0034] FIG. **2** is an enlarged explanatory diagram of a spacer section according to the first embodiment in FIG. **1**;

[0035] FIG. **3** is a schematic explanatory diagram of a cross-sectional view of FIG. **2**;

[0036] FIG. **4** is a planar view of a substrate for a wet channel used in the indirect evaporative cooling apparatus according to the first embodiment of the present invention;

[0037] FIG. **5** is an enlarged explanatory diagram of the spacer section in FIG. **4**;

[0038] FIG. **6** is a schematic explanatory diagram of a cross-sectional view of FIG. **5**;

[0039] FIG. **7** is a perspective view of the interior of the indirect evaporative cooling apparatus according to the first embodiment of the present invention;

[0040] FIG. **8** is a diagram of a view from an incoming air side arrow in FIG. **7**;

[0041] FIG. **9** is a diagram of a view from an outgoing air side arrow in FIG. **7**;

[0042] FIG. **10** is a side view of FIG. **7**;

[0043] FIG. **11** is a partially enlarged explanatory diagram of FIG. **7**;

[0044] FIG. **12** is a partially enlarged explanatory diagram of a plastic substrate according to a second embodiment;

[0045] FIG. **13** is a schematic diagram of an indirect evaporative cooling apparatus according to a third embodiment of the present invention;

[0046] FIG. **14** is a planar view of an example of a plastic substrate (heat exchange member) used according to the third embodiment; and

[0047] FIG. **15** is a perspective view of an example of the indirect evaporative cooling apparatus of the present invention.

BEST MODE(S) FOR CARRYING OUT THE INVENTION

[0048] An indirect evaporative cooling apparatus of the present invention will be described according to the embodiments shown in the drawings.

[0049] (1) To induce an evaporation phenomenon to a maximum degree in a wet channel in the indirect evaporative cooling apparatus of the present invention,

[0050] (a) a method of supplying water to the wet channel;

[0051] (b) a method of wicking using capillary action; and

[0052] (c) flow path length are taken into consideration.

[0053] In particular, flow rate and separated flow ratio of water supply are required to be appropriately selected. As a result of test analysis of experimental data, appropriate values of the parameters are as follows: flow path length of 300 mm, flow path width of 200 mm, a flow path height of 2 to 3 mm, and a flow rate of 1 to 4 m/sec.

[0054] (2) Humidity and moisture must not be transferred between a wet channel and a dry channel. Therefore, a plastic that does not allow water to pass, such as polyester or polypropylene, is preferably used as a substrate used as a partition wall for both channels. The plastic partition wall has a thickness of about 0.3 mm to maximize heat exchange efficiency.

[0055] (3) To create air flow, a space with a height of 2 to 3 mm is required to be formed in the wet channel and the dry channel. For this purpose, a circular spacer **2** having a diameter of about 5 mm and a height of about 3 mm is disposed between substrates in a manner allowing integral molding.

[0056] (4) Disposing the above-described circular spacer between the substrates causes a turbulent eddy to be formed in the air that is sent into the channels. The air passing through the channels preferably flows as straight as possible. Therefore, as a means for straightening the turbulent eddy caused by the circular spacer, numerous dimples similar to dimples on a golf ball are embossed on the substrates to straighten the air flow. The dimple preferably has a diameter of about 1.8 mm and a height of about 0.3 mm.

[0057] (5) The above-described dimples embossed on the substrate surface not only prevent turbulent air flow and straighten the air flow, but also achieve an effect of increasing heat exchange area.

[0058] (6) The plastic substrate has a smooth surface. Therefore, a film layer to be wetted with water is provided on the plastic board surface. A woven fabric or a non-woven fabric is used as the film layer. Paper, such as cellulose, or polypropylene is suitable as the material. A suitable film layer thickness is about 0.2 to 0.5 mm. The substrate is configured by the film layer being adhered or bonded by thermocompression to the surface of the plastic board on the wet channel side.

[0059] (7) To induce the evaporation phenomenon to a maximum, degree in the wet channel, a suitable amount of water introduced into the wet channel is that allowing almost sufficient wetness. However, the degree of the evaporation phenomenon decreases in a state in which water is flowing. Therefore, the woven fabric, the non-woven fabric, or the paper such as cellulose serving as the wetting film is prefer-

ably impregnated with an absorption agent (having high absorption and desorption of water) in advance, and water is preferably held in the wetting film.

[0060] (8) Regarding the method of sending air into the wet channel and the dry channel of the indirect evaporative cooling apparatus of the present invention, air is always sent through the dry channel in one direction. Various methods can be considered as a method of sending some of the air passing through the dry channel into the wet channel. However, in the present invention, it has been determined that some of the air is sent into an open wet channel simply by external static pressure being applied on an outlet side for the air in the dry channel (see FIG. **11**). The amount of air introduced to the wet channel side is suitably about 30 to 50% of the amount of air flowing through the dry channel. Some of the air leaving the dry channel is sent into the wet channel by the external, static pressure on the outlet side of the dry channel being changed. In this instance, experimental data indicates that, when static pressure of about 90 to 100 Pa is applied as the external static pressure, about 30% of the air flows into the wet channel. The air that flows into the wet channel is discharged outside from an exhaust opening in the wet channel after the evaporation phenomenon occurs within the wet channel.

[0061] (9) In addition to the use of only external air, return air from a room with favorable temperature and humidity conditions may be used. In this instance, rather than the return air being mixed with the external air, there is a method in which the temperature of the air passing through the dry channel is further lowered by only the return air having favorable conditions being sent into the wet channel. In the method, the return air is introduced into the wet channel through the exhaust opening of the wet channel. The return air passes through the wet channel and the evaporation phenomenon is induced. Subsequently, the return air is discharged from another exhaust opening provided on a side opposite to the exhaust opening of the wet channel.

[0062] (10) A plastic substrate formed from a porous material may be used as the plastic substrate of the present invention.

[0063] (11) Excellent water absorption is achieved if a plastic substrate having short fibers adhered to the wet channel side surface by electrostatic flocking is used.

[0064] The indirect evaporative cooling apparatus of the present invention will be described with reference to the drawings.

[0065] FIG. **1** to FIG. **3** are explanatory diagrams of a substrate **1** disposed on the dry channel side. A plurality of spacers **2** are embossed on the surface of a plastic sheet. Numerous dimples **3** are embossed between the array of spacers **2** (the dimples **3** are indicated by dots in FIG. **1** and FIG. **4** due to the small size thereof). Shield walls **6** and **6** (for preventing air flow towards the sides) are provided in a projecting manner on left and right edges of the plastic sheet. An opening for an exhaust opening **7** is formed in the upper portion on both sides in FIG. **1**. The shield walls **6** and **6** restrict air flow within the channel. A supply pipe **4** that supplies water for cooling is disposed in the center. A plurality of spray openings are provided in the supply pipe **4**. If the supply pipe **4** is not provided, another method may be used to supply water, such as using capillary action with fabric and the like immersed in a water tank as described in Japanese Patent Unexamined Application Publication No. 2004-513320. A film layer **5** made of a woven fabric, a non-woven fabric, or the like that retains water is provided on the back surface (wet channel side) of the plastic sheet. Reference number **9** indicates an engaging piece used when layering the substrate **1** (with a substrate **1***a* of the wet channel). Reference number **11** is an engaging edge piece that projects towards the cooled air intake side. The engaging edge piece **11** engages with an engaging edge piece **11***a* of the substrate **11***a* on the wet channel side and blocks air from entering.

[0066] FIG. **4** to FIG. **6** are explanatory diagrams of a substrate **1***a* disposed on the wet channel side. In manner similar to the substrate **1** of the dry channel, the substrate **1***a* is configured by a plastic sheet having the spacers **2** and the dimples **3**, and including the shield walls **6** and **6** and the exhaust openings **7** on both sides. The film layer **5** that is a water-retaining member is adhered to the upper surface of the substrate **1***a*. An engaging piece **9***a* projects downward. The engaging piece **9***a* of the wet channel and the engaging piece **9** of the dry channel hold both substrates **1** and **1***a* in an engaged state. Reference number **10** is a shield member that prevents air from flowing into the wet channel. An engaging edge piece **11***a* is provided projecting to the outer side of the shield member **10**. As a result, cooled air is prevented from flowing into the wet channel when the cooled air is blown into the dry channel.

[0067] Operations of the indirect evaporative cooling apparatus of the present invention are described.

[0068] In FIG. **7**, the dimples **3** are omitted because of their small size in comparison with the spacers **2**. The supply pipe **4** supplies water, and coolant water is held within the wet channel.

[0069] Cooled air is inserted into the dry channel from the inlet side. At this time, air flow into the wet channel is prevented by the engaging edge pieces **11** and **11***a*. Air passing through the dry channel is discharged from the exhaust side. Static pressure of 90 to 100 Pa is applied near the outlet, and some of the discharged air returns into the wet channel. The air that passes through the wet channel cools the substrate **1** as a result of the evaporation phenomenon occurring on the moisture absorbed within the film layer **5**. The air containing moisture is discharged from the exhaust opening **7**. In this way, the air within the dry channel is cooled by heat exchange. The dimples **3** formed on the substrate **1** improve heat efficiency.

[0070] According to another embodiment, layered substrates are disposed in the vertical direction. Water is supplied from the upper side within the wet channel, and the surface of the substrate is humidified. In this instance, humidity may be insufficient on the lower side. Therefore, a configuration may be used in which the lower end of the substrate is immersed in a water tank, and capillary action is used to pass moisture upwards.

[0071] In an indirect evaporative cooling apparatus according to a third embodiment of the present invention, further excellent heat exchange can be performed if concurrent flow is used for a sending direction of external air supplied into a room and an inlet direction of dry air supplied within the wet channel, as shown in FIG. **13**.

[0072] In a schematic diagram of a cooling section of the indirect evaporative cooling apparatus shown in FIG. **13**, the dry channel is formed by the substrate **1**. A hydrophilic water-retaining film **5** is formed on the outer surface of the substrate **1**. External air is introduced into the wet channel surrounded by the water-retaining films **5** and **5**, and humidified air is discharged from the exhaust opening **7**. Water is supplied to

the water-retaining film **5** from a water tank provided in a cooling section. Water may be sprayed from above if required.

[0073] A plastic substrate disposed in the cooling section of the indirect evaporative cooling apparatus according to the third embodiment of the present invention is described.

[0074] In the substrate **1** disposed on the wet channel side, shown in FIG. **14**, streamline spacers **2** (see FIG. **12**) having an elliptical shape or a roughly rhombic shape are embossed on a porous plastic sheet. Numerous dimples **3** are embossed between the array of spacers **2**. Shield walls **6** are (for preventing air flow towards the sides) are provided in a projecting manner on upper and lower edges of the substrate **1***a*. An inlet **12** and an exhaust opening **7** are opened on both end edges of the upper shield wall **6**. Shield members **10** are provided in a projecting manner on each end edge of the substrate **1***a* on the external air inlet side and the exhaust opening side. Air flow within the channel is restricted by the shield walls **6** and **6** and a flow-straightening plate **13**. Humidified air is discharged from the exhaust opening **7** while water in the water-retaining film **5** is evaporated. Water absorption of the water-retaining film **5** is enhanced by the water-retaining film **5** being coated with an absorbing agent, such as titanium oxide sponge or silica gel.

[0075] The substrate **1** disposed on the dry channel side is configured to include three rhombic streamline spacers **2** and the dimples **3** on a porous plastic sheet. The substrate **1** also includes the shield walls **6** and **6** in the upper and lower portions, in a manner similar to the substrate **1***a* on the wet channel side.

[0076] Operations of the indirect evaporative cooling apparatus are described.

[0077] As shown in FIG. **15**, in the cooling section in which the substrates **1** are layered, the substrates **1** are arrayed vertically. The lower side of the cooling section is immersed in the water tank **14**. On the other hand, a water spraying member (not shown) is, provided on the upper side, and water is supplied to the wet channel accordingly. Coolant water is held, within the wet channel.

[0078] External air is introduced into the wet channel from the inlet **12** by an air blower (not shown). The evaporation phenomenon is induced in the wet channel. Humidified air is discharged from the exhaust opening **7**. As a result, for example, a room can be humidified during the winter. On the other hand, cooled air is inserted into the dry channel from the inlet side using an air blower (not shown). The cooled air is cooled within the dry channel by heat exchange: with the cooled substrate **1**. The cooled air, is cooled to an appropriate temperature and supplied to the room.

[0079] A concurrent flow, direct-type cooling section such as that described above is easily manufactured. Structures, such as the inlet and the exhaust opening of the flow path substrates, are easily manufactured.

INDUSTRIAL APPLICABILITY

[0080] (1) The indirect evaporative cooling apparatus of the present invention cools air using only the evaporation phenomenon of water. No gaseous refrigerants are used. The use of gaseous refrigerants is considered to be a factor in global warming. Therefore, a significant effect on CO2 reduction is achieved. Furthermore, because a compressor is not used, energy, such as electricity and gas, is not used. Therefore, the benefits are enormous.

[0081] (2) In addition to the method of use in which external air is directly processed, a method of introducing air dehumidified by a desiccant air conditioner into the indirect evaporative cooler and using the air may be used. In terms of cooling performance of the indirect evaporative cooler, the outlet temperature decreases as the few-point temperature of the inlet air becomes lower, because the evaporation phenomenon occurs to a greater degree. A system using the desiccant air conditioner to lower the dew-point of the inlet air and the indirect evaporative cooler to lower the temperature without humidifying the air having the dew-point lowered by the desiccant air conditioner is extremely beneficial for use as an outdoor air-conditioning unit.

1. An indirect evaporative cooling apparatus in which a substrate is disposed between a wet channel used to induce an evaporation phenomenon and a dry channel through which cooled air passes, the wet channel and the dry channel are arrayed in layers in an alternating manner, the substrate is cooled by the evaporation phenomenon occurring within the wet channel, substrates that cool the air in the dry channel by heat transfer are layered and disposed, wherein:

the substrate forming the wet channel and the dry channel is formed by a plastic sheet; a substrate is used in which a plurality of projections are formed as spacers on one side of the substrate of the wet channel and the dry channel, and numerous projections are formed by emboss-patterning on the surface of the substrate on which the spacers are formed and dimples are integrally formed on a back surface.

2. The indirect evaporative cooling apparatus according to claim **1** in which a substrate is disposed between a wet channel used to induce an evaporation phenomenon and a dry channel through which cooled air passes, the wet channel and the dry channel are arrayed in layers in an alternating manner, the substrate is cooled by the evaporation phenomenon occurring within the wet channel, substrates that cool the air in the dry channel by heat transfer are layered and disposed, wherein:

the substrate forming the wet channel and the dry channel is formed by a plastic sheet; a plurality of projections are formed as spacers on one side of the substrate of the wet channel and the dry channel, and numerous projections are formed by emboss-patterning on the surface of the substrate on which the spacers are formed and dimples are integrally formed on a back surface; air flow within the wet channel and air flow within the dry channel are counter-flows; and, in an exhaust opening for air that passes through each layered dry channel and is cooled, some of the air is sent into the adjacent wet channels using external static pressure, the air flow that is a counterflow to the air flow in the dry channel is created in the wet channel, and cool air is discharged, from exhaust openings provided on both sides of the substrate.

3. The indirect evaporative cooling apparatus according to claim **1** or **2**, wherein the plurality of spacers arrayed to form a space with a width and height of about 2 to 3 mm between adjacent substrates for air flow in each layered wet channel and dry channel are circular.

4. The indirect evaporative cooling apparatus according to claim **1** or **2**, wherein, on a wet channel surface of the substrate of the wet channel and the dry channel, a recess formed

by embossing on the substrate is a dimple with a diameter of about 1.8 mm, the dimple straightens turbulent eddy of air blowing through the dry channel caused by the spacers formed in the substrate, and the heat exchange area is increased by the dimples formed on the back surface.

5. The indirect evaporative cooling apparatus according to claim **1** or **2**, wherein another exhaust opening is provided on a side opposite to the exhaust opening of the layered wet channels, and return air from outside is sent into the wet channels.

6. The indirect evaporative cooling apparatus according to claim **1** or **2**, wherein, during winter, air containing humidity discharged from the wet channel is supplied to a room and humidifies the room.

7. The indirect evaporative cooling apparatus according to claim **1** or **2**, wherein short fibers are flocked onto the wet channel side surface of the plastic sheet substrate by electrostatic flocking.

8. The indirect evaporative cooling apparatus according to claim **1** or **2** wherein the air flow passing through the wet channel and the air flow passing through the dry channel of the indirect evaporative cooling apparatus are concurrent flows.

9. The indirect evaporative cooling apparatus according to claim **1** or **2**, wherein the shape of the spacers on the substrate that is the plastic sheet is rhombic or elliptical.

* * * * *