US 20100000247A1

(19) United States

(12) Patent Application Publication

(10) Pub. No.: US 2010/0000247 A1

(43) Pub. Date: Jan. 7, 2010

Bhatti et al.

(54) SOLAR-ASSISTED CLIMATE CONTROL SYSTEM

(76) Inventors: **Mohinder S. Bhatti**, Williamsville, NY (US); **John A. Hoog**, El Paso, TX (US); **Joseph P. Dunlop**, Amherst, NY (US)

Correspondence Address:
Delphi Technologies, Inc.
M/C 480-410-202, PO BOX 5052
Troy, MI 48007 (US)

(21) Appl. No.: **12/217,595**

(22) Filed: **Jul. 7, 2008**

Publication Classification

(51) **Int. Cl.**
F25B 27/00 (2006.01)
F25D 17/00 (2006.01)

(52) **U.S. Cl.** **62/235.1**; 62/94

(57) **ABSTRACT**

A method for providing climate control is disclosed herein. The method includes the step of circulating liquid desiccant in a first fluid circuit. The method also includes the step of disposing a dehumidifier along the first fluid circuit. The method also includes the step of disposing a regenerator along the first fluid circuit downstream of the dehumidifier. The method also includes the step of harnessing solar energy with at least one solar collector. The method also includes the step of circulating coolant in a second fluid circuit. The at least one solar collector and the regenerator are both disposed along the second fluid circuit whereby the coolant is heated during passage adjacent to the at least one solar collector and transfers thermal energy to the liquid desiccant during passage through the regenerator. The first and second fluid circuits are in parallel in the regenerator.

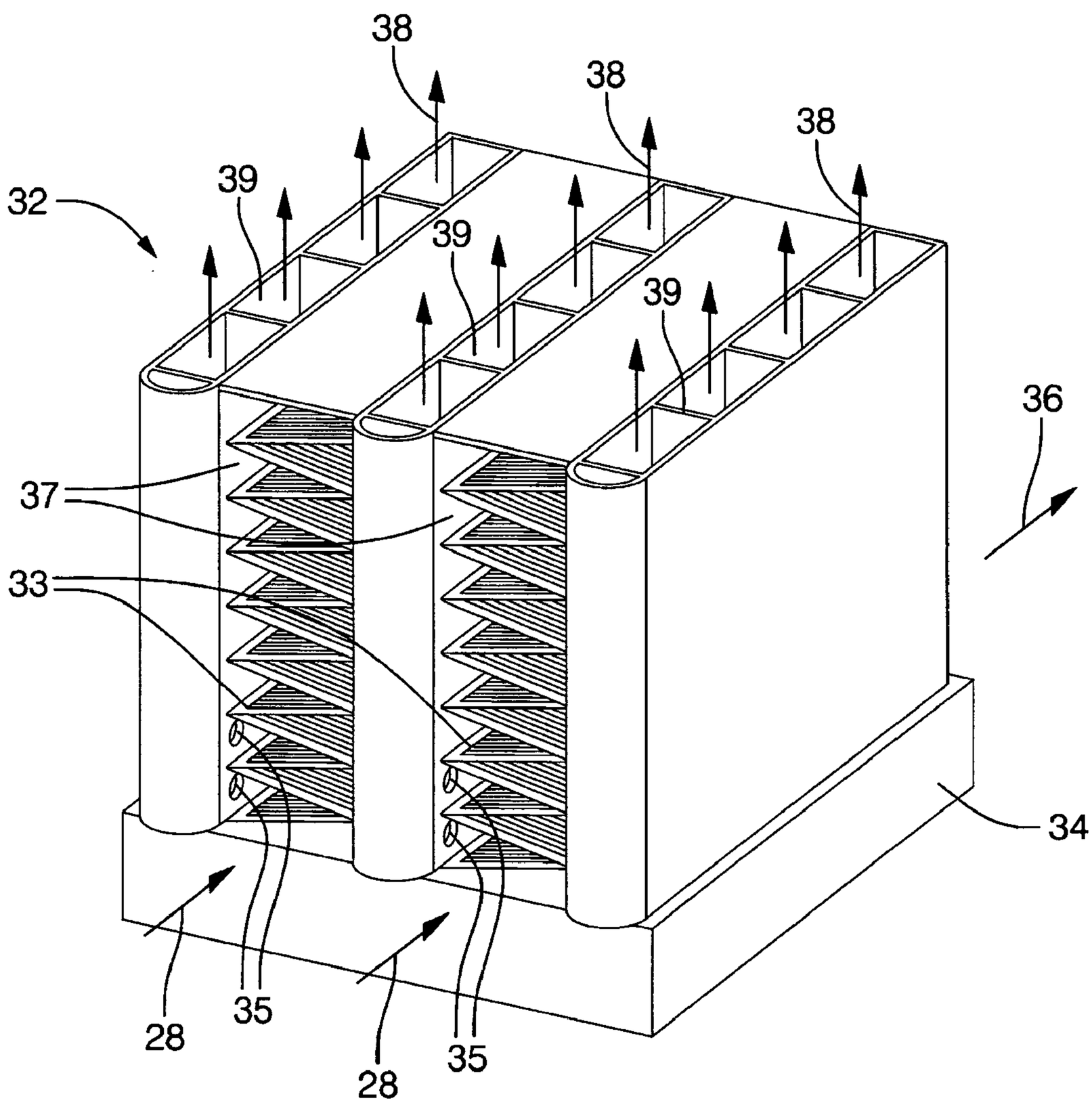

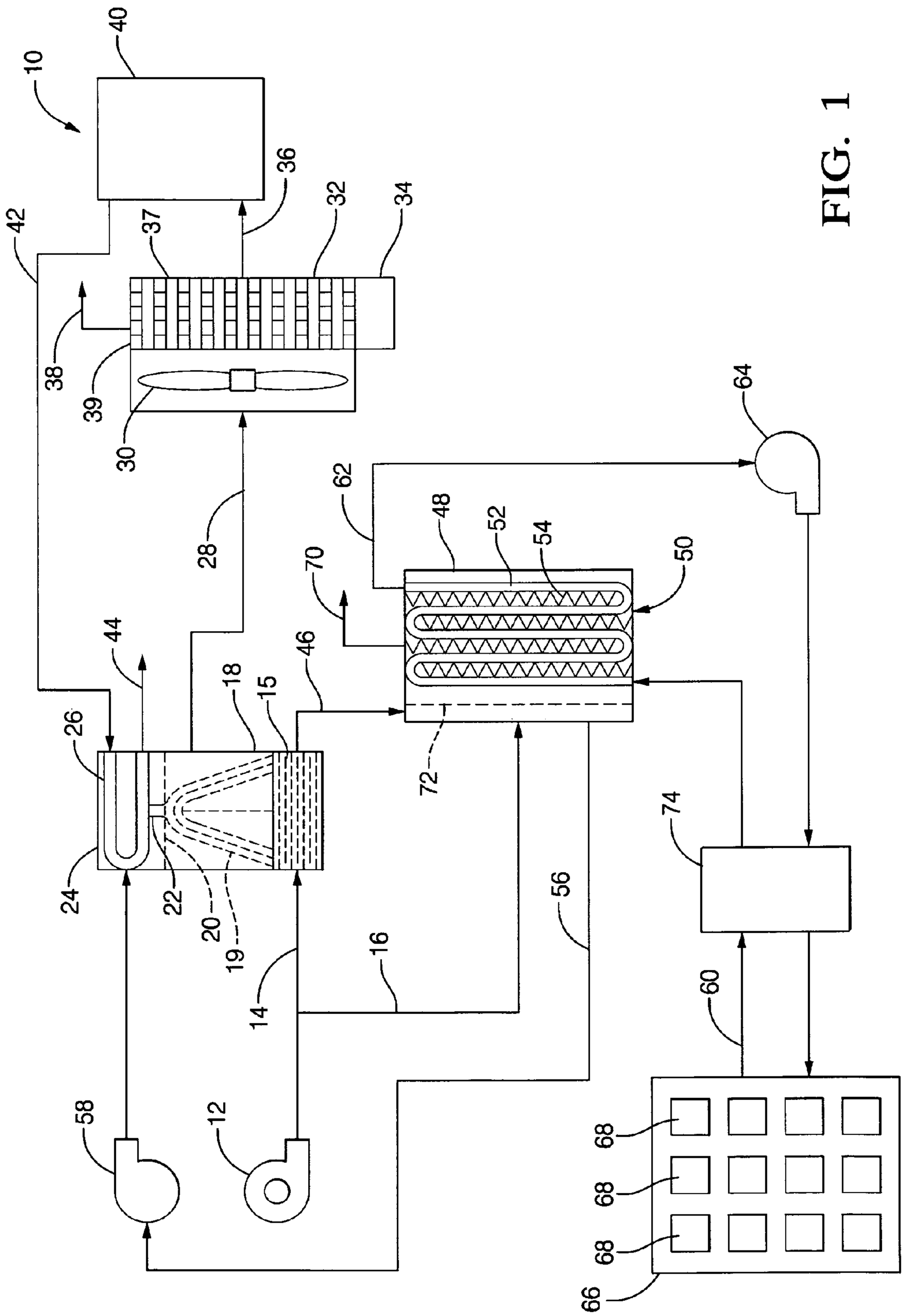
10
40
42
37
36
32
34
38
39
30
28
62
48
52
54
50
70
44
46
18
15
26
72
74
24
22
20
19
14
16
56
60
64
58
12
68
68
68
66

FIG. 1

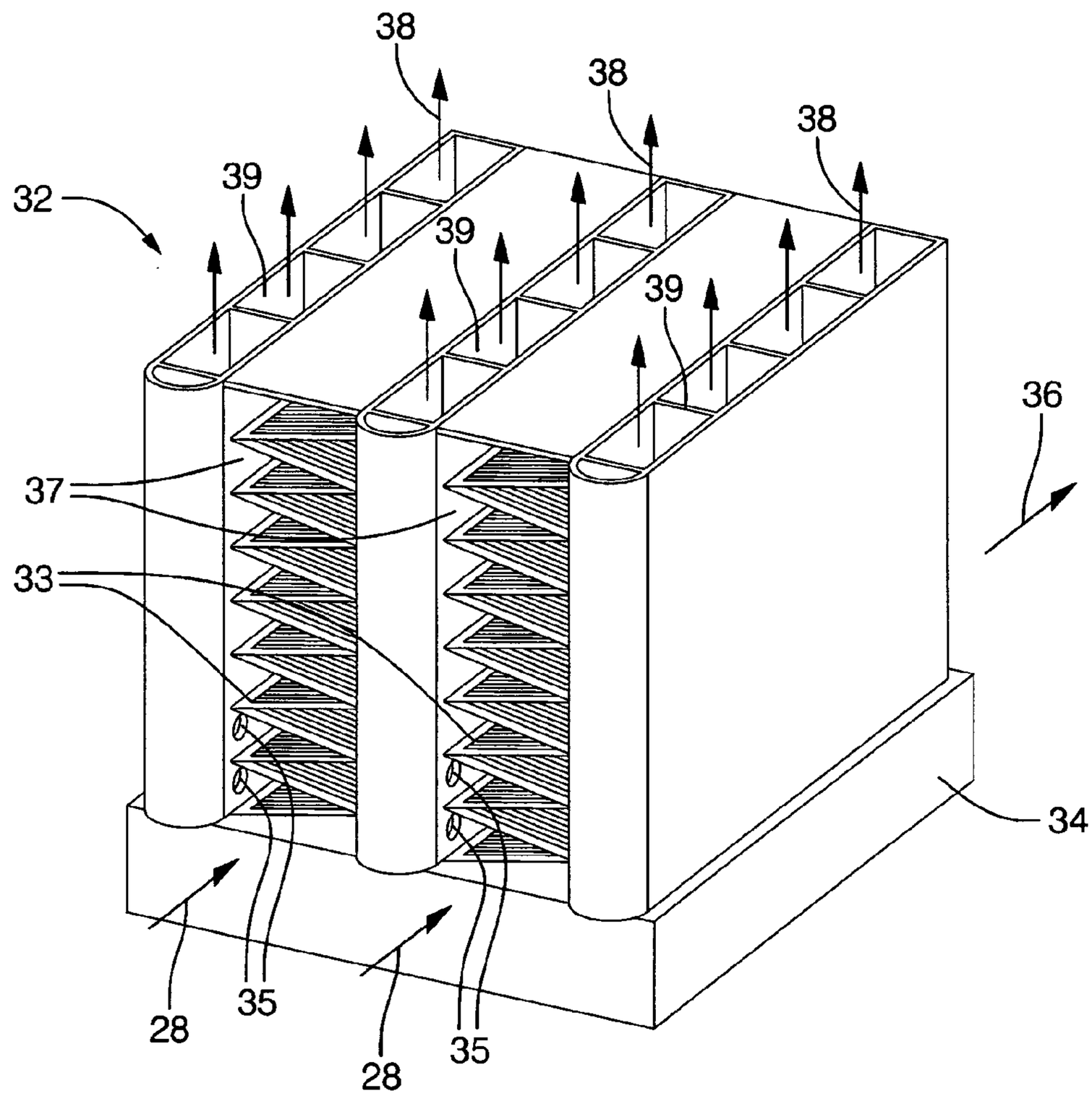

FIG. 2

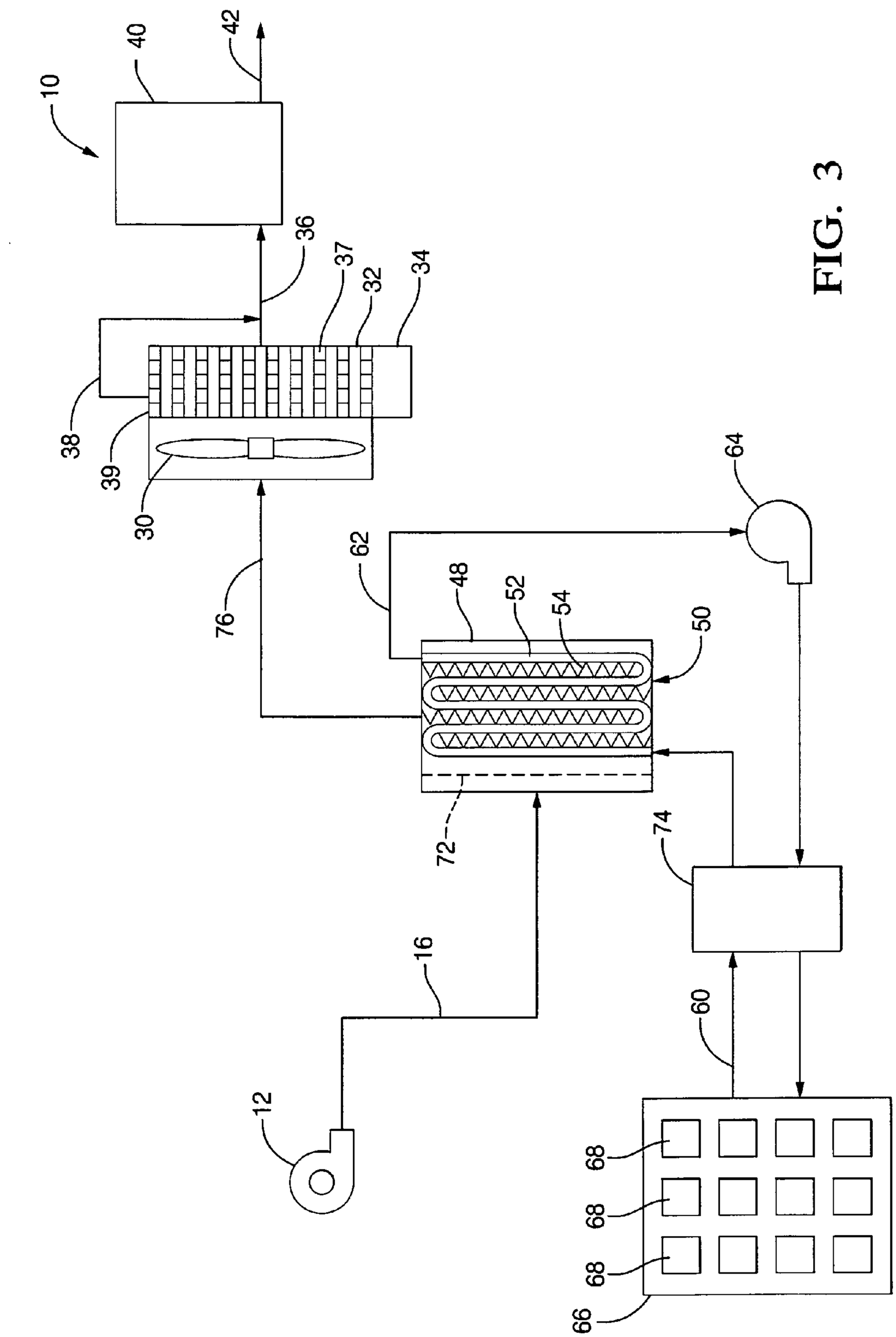
10
40
42
36
37
32
34
38
39
30
76
62
48
52
54
50
64
72
74
16
60
12
68
68
68
66

FIG. 3

SOLAR-ASSISTED CLIMATE CONTROL SYSTEM

BACKGROUND OF THE INVENTION

[0001] 1. Field of the Invention

[0002] The invention relates to commercial or residential air conditioning systems and specifically to a solar-powered comfort heating and cooling system.

[0003] 2. Description of Related Prior Art

[0004] The prime function of an air conditioning system is to supply properly conditioned air to the conditioned space. In summer time, the conditioned air is obtained by reducing the dry bulb temperature—simply referred to as temperature in common parlance—of the moisture-laden hot air admitted into the air conditioning system. When such an air stream flows through the air conditioning system, there is transfer of both sensible heat (sensed by a thermometer) and latent heat (hidden, not sensed by the thermometer). The air conditioning system thus conditions the air by sensibly cooling it and additionally by moisture removal therefrom. Removal of moisture from air occurs exothermally which means that as the moisture is condensed from the moist air its dry bulb temperature increases. The temperature of the air rises about 0.75° F. for each grain of moisture (1 grain=0.000143 lb) condensed therefrom. Thus, the air conditioning load has two distinct components: sensible load due to cooling alone (i.e., drop in dry bulb temperature) and latent load due to moisture removal from air with concurrent rise in its dry bulb temperature.

[0005] The widely used air conditioning system is the vapor pressure system, which is capable of handling both sensible and latent loads. However, it is not very energy efficient due to the fact that the mechanical compressor used in the vapor compression system requires a large amount of energy. Motivated by this consideration, attention is directed to an alternate air conditioning system—an evaporative cooling system, which is best suited for handling the sensible load, but not the latent load. Hence for proper conditioning of air in summer time a dehumidifier operating in series with the evaporative cooler has to be employed to deal with the latent load.

[0006] Broadly speaking, there are two types of evaporative cooler—direct and indirect. A direct evaporative cooler comprises a bundle of wet channels through which flows the air to be cooled. During its passage through the wet channels, the dry bulb temperature of the air decreases while its absolute humidity increases due to the fact that the vaporizing liquid water in the wet channels abstracts heat from the air while adding water vapor to the air. Whereas a decrease in the dry bulb temperature is the desired effect resulting in lower sensible air conditioning load, increase in the absolute humidity is the undesired effect resulting in higher air conditioning load. Thus direct evaporative cooling is counterproductive to some extent. A direct evaporative cooler is colloquially referred to as a swamp cooler since the humid cold air generated inside the wet channels often has a musty odor to it.

[0007] An indirect evaporative cooler comprises two sets of channels—dry and wet, the latter being lined with a wicking material. Also in the indirect evaporative cooler there are two air streams—the primary air stream flowing through the dry channels and the secondary air stream flowing through the wet channels. The two air streams do not come into direct contact with each other so the absolute humidity of the primary air remains at its initial level. However, the absolute humidity of the secondary air increases as it flows through the wet channel due to vaporization of the liquid water on the wet channel walls. As a result, the temperature of the wet channel wall is lowered. The primary air flowing through the dry channels tends to assume the temperature of the cooled wet channel walls without absorbing any moisture or odor and thereby maintaining its absolute humidity at the original level. Thus it is apparent that in indirect evaporative cooling the primary air is cooled sensibly with heat exchange through the walls of the dry channels as the secondary air flowing through the wet channels carries away the heat extracted from the primary air stream.

[0008] There is a variant of the indirect evaporative cooler called staged indirect evaporative cooler. It has found applications in recent years as described in the U.S. Pat. Nos. 6,705,096; 6,581,402; 6,497,107 and 5,453,223. Direct and indirect evaporative coolers can be combined into a compound evaporative cooler.

[0009] In the staged indirect evaporative cooler, the primary air flows through the dry channels and the secondary air through the wet channels. As the primary air flows through the dry channels, small fractions of it are bled into the wet channel in multiple stages. The process of staged bleeding of the primary air into the secondary air stream flowing through the wet channels greatly increases the efficiency of the evaporative cooler. Whereas the conventional direct and indirect evaporative coolers can lower the dry bulb temperature of the primary air stream to within 5 to 30% of the wet bulb temperature of the air, the staged indirect evaporative cooler is capable of lowering the dry bulb temperature of the primary air stream up to 22% below the wet bulb temperature and to within 15% of the dew point temperature.

[0010] In view of its higher efficiency and absence of musty odor in the conditioned air stream, a staged indirect evaporative cooler is employed in the present invention to handle the sensible load of the air conditioning system. As for the latent load, it is handled by employing a separate dehumidifier with a desiccant material.

[0011] Desiccant materials can be either solids or liquids. For example, the small packets inside camera cases and consumer electronics boxes often contain silica gel, a solid desiccant. Also, triethylene glycol—a liquid similar to auto engine coolant—is a powerful desiccant which can absorb moisture. Liquid and solid desiccants both behave the same way—their surface vapor pressure being a function of their temperature and moisture content. One subtle distinction between desiccants is their reaction to moisture. Some simply collect moisture like a sponge. The collected water is held on the surface of the material and in the narrow passages through the sponge. These desiccants are called adsorbents and are mostly solid materials. Silica gel is an example of a solid adsorbent. Other desiccants undergo a chemical or physical change as they collect moisture. These are called absorbents and are usually liquids or solids which become liquid as they absorb moisture. Lithium chloride (LiCl) and sodium chloride (NaCl)—common table salt—are examples of hygroscopic salts, which collect water vapor by absorption.

[0012] When moisture is removed from air flowing over a desiccant material, the reaction liberates heat. In other words, desiccant removes moisture from air exothermally. This is simply the reverse of evaporation process wherein heat is consumed by the reaction. In a vapor compression air conditioning system, the heating effect of dehumidification of air at the evaporator surface is less apparent because the heat is removed immediately by the refrigerant inside the evaporator.

In a desiccant dehumidification system, the heat is transferred to the air and to the desiccant. Thus the process air generally leaves the dehumidifier warmer than when it entered the desiccant unit. The temperature rise of the dehumidified air is directly proportional to the moisture removed from the air. The drier the air leaving the dehumidifier the warmer it is.

SUMMARY OF THE INVENTION

[0013] In summary, the invention is a method for providing climate control. The method includes the step of circulating liquid desiccant in a first fluid circuit. The method also includes the step of disposing a dehumidifier along the first fluid circuit. The method also includes the step of disposing a regenerator along the first fluid circuit downstream of the dehumidifier. The method also includes the step of harnessing solar energy with at least one solar collector. The method also includes the step of circulating coolant in a second fluid circuit. At least one solar collector and the regenerator are both disposed along the second fluid circuit whereby the coolant is heated during passage adjacent to the solar collector and transfers thermal energy to the liquid desiccant during passage through the regenerator. The first and second fluid circuits are in parallel in the regenerator.

BRIEF DESCRIPTION OF THE DRAWINGS

[0014] Advantages of the present invention will be readily appreciated as the same becomes better understood by reference to the following detailed description when considered in connection with the accompanying drawings wherein:

[0015] FIG. **1** shows the summer time operation of the comfort heating and cooling system;

[0016] FIG. **2** shows details of the indirect evaporative cooler; and

[0017] FIG. **3** shows the winter time operation of the comfort heating and cooling system.

DETAILED DESCRIPTION OF THE EXEMPLARY EMBODIMENT

[0018] In the exemplary embodiment of the present invention, a dehumidifier with a liquid desiccant is employed to handle the latent load of the air conditioning system. The liquid dehumidifier operates in conjunction with a regenerator which reconstitute the dilute desiccant by removing moisture therefrom thereby ensuring continuous operation of the air conditioning system.

[0019] The solar-powered comfort heating and cooling system comprises an indirect evaporative cooler operating in series with an air dehumidifier. The function of the indirect evaporative cooler is to handle the sensible load and that of the dehumidifier is to handle the latent load of the system. The liquid desiccant used in the air dehumidifier is reconstituted in a shell-and-tube type of regenerator using a coolant heated by an array of solar collectors. An auxiliary heater operating in series with the solar collector array is provided to heat the coolant when there is no sunshine or when the solar heating needs to be supplemented during periods of peak demand. During winter time, the air dehumidifier is rendered non-functional and the cold ambient air is heated in the regenerator using the solar energy or energy supplied by the auxiliary heater. The hot air is then distributed to the conditioned space through the evaporative cooler directing the bulk of the air through the dry channels and a small fraction through the wet channels to adjust the humidity of the hot air entering the conditioned space.

[0020] In FIG. **1**, the solar-powered comfort heating and cooling system is generally indicated as **10**. The major components of the system are a centrifugal air blower **12**, an air dehumidifier **18**, an axial fan **30**, an indirect evaporative cooler **32** comprising an array of horizontally aligned dry channels **37** and an array of vertically aligned wet channels **39**, a water tank **34** in fluid communication with the wet channels **39**, a desiccant tank **24** in fluid communication with a spray nozzle **22**, a cooling coil **26** housed inside the tank **24**, a desiccant regenerator **48**, in fluid communication with the air dehumidifier **18**, a heating coil **50** housed inside the regenerator **48** and comprising a serpentine tube **52** and an array of convoluted fins **54**, a desiccant pump **58** in fluid communication with the regenerator **48**, the desiccant tank **24** and the air dehumidifier **18**, an array **66** comprising a multitude of individual solar collectors **68**, an auxiliary heater **74** operating in series with the solar collector array **66** and a coolant pump **64** in fluid communication with the solar collector array **66**, the auxiliary heater **74** and the heating coil **50**.

[0021] The ambient air **14** at dry bulb temperature in the range 70-110° F. and absolute humidity 0.015-0.030 lb H_2O/lb air is blown into the air dehumidifier **18** by the centrifugal blower **12**. The dehumidifier **18** comprises a pool of relatively dilute liquid desiccant **15** at temperature in the range 90-100° F., a desiccant trapping screen **20**, the spray nozzle **22** in fluid communication with the tank **24**, which holds concentrated liquid desiccant under pressure and the cooling coil **26** to cool the liquid desiccant in the tank **24**. Examples of the liquid desiccants suitable for dehumidifying air are lithium chloride (LiCl) and triethylene glycol. For water vapor to be absorbed by the desiccant from the air stream in contact therewith the vapor pressure of water in the air must be higher than the vapor pressure of water in the desiccant solution.

[0022] The ambient air stream **14** is drawn into the bottom of the dehumidifier **18** where it bubbles through the liquid desiccant pool **15** giving off some of its moisture. Devoid of some of its moisture content, it flows upward into the cloud of atomized droplets **19** produced by the spray nozzle **22** in the upper part of the dehumidifier **18**. The atomized liquid desiccant droplets in the cloud **19** absorb additional moisture from the air stream **14** dehumidifying it completely. The dehumidified air at a temperature of about 70-100° F. and absolute humidity in the range 0.01-0.02 lb H_2O/lb air exits the dehumidifier **18** as air stream **28**. The desiccant trapping screen **20** prevents carry over of the liquid desiccant with the dehumidified air stream **28**.

[0023] The dehumidified air stream **28** is propelled by the axial fan **30** and forced into the indirect evaporative cooler **32** comprising dry channels **37** and wet channels **39**. Within the evaporative cooler **32** the dehumidified air stream **28** splits into two air streams—the dry air stream **36** going through the dry channels **37** with convoluted fins **33** and the wet air stream **38** going through the wet channels **39** lined with a wicking material. As shown in FIG. **2**, a fraction of the incoming air stream **28** is drawn into the wet channels **39** through the orifices **35** in the walls of the dry channels **37** thus splitting the incoming air stream **28** into the dry air stream **36** and the wet air stream **38**.

[0024] The wicking material wicks the liquid water by capillary action from the water tank **34** into the wet channels **39**. Thus wicked liquid water in the wet channels **39** evaporates

into the air stream **38** abstracting heat from the dry air stream **36**. While the wet air stream **38** becomes saturated with water vapor with negligible change in its dry bulb temperature, the dry air stream **36** becomes cooler without any change in its absolute humidity. The fully conditioned (cooled and dehumidified) dry air stream **36** with dry bulb temperature in the range 50-70° F. and the absolute humidity in the range 0.01-0.02 lb H_2O/lb air enters the conditioned space **40** while the saturated wet air stream **38** is exhausted from the indirect evaporative cooler **32** as a waste stream. The dry and wet air streams **36**, **38** do not mingle in the indirect evaporative cooler **32** thus ensuring that the absolute humidity of the dry air stream **36** does not change during its passage through the evaporative cooler.

[0025] The liquid desiccant in the dehumidifier **18** becomes dilute due to absorption of water vapor from the ambient air stream **14** and must be regenerated. This is done in the regenerator **48** of the shell-and-tube design comprising the heating coil **50** with the serpentine tube **52** and the convoluted fins **54** to facilitate heat dissipation from the hot coolant to the liquid desiccant. The diluted liquid desiccant **46** at a temperature in the range 90-100° F. enters the regenerator **48** through the coolant distributing screen **72** flooding the convoluted fins. The hot coolant **60** with temperature in the range 160-190° F. from the array **66** of solar collectors **68** flows inside the serpentine tube **52** giving off its heat to the dilute liquid desiccant outside the serpentine tube **52** of the heating coil **50** thereby driving the absorbed water vapor and reconstituting the liquid desiccant to high concentration. The heat given off by the hot coolant inside the serpentine tube **52** raises the temperature of the desiccant solution outside the tube. This in turn increases the vapor pressure of water in the desiccant solution expelling it from the solution. The vapor pressure of water expelled from the solution is higher than the vapor pressure of water in the scavenging air stream **16** and so the water vapor is carried away by the scavenging air stream **16**. Thus generated water vapor is exhausted from the regenerator **48** as the waste stream **70** propelled by the scavenging air stream **16** injected into the regenerator **48** by the centrifugal blower **12**.

[0026] The cold coolant **62** with temperature in the range 130-160° F. exits the serpentine tube **52** of the heating coil **50**, being propelled by the coolant pump **64**, and enters the array **66** of solar collectors **68** to pick up heat from the solar collectors **68**. A second fluid circuit **78** is defined by the circulating passage of the coolant **60**, **62**. An auxiliary heater **74** is provided for heating the coolant during night time operation when there is no sunshine. The regenerated liquid desiccant **56** from the regenerator **48** with temperature in the range 120-140° F. is pumped to the desiccant tank **24** propelled by the liquid desiccant pump **58**. The reconstituted hot liquid desiccant **56** is cooled in the desiccant storage tank **24** by means of the cooling coil **26** using the cold air stream **42** with temperature in the range 80-90° F. drawn from the conditioned space **40**. Thus generated hot air stream **44** is exhausted from the cooling coil **26**. A third fluid passageway **80** is defined by the passage of cold spent air from the conditioned space **40** between the inlet of the dehumidifier **18** and the exit of the cooling coil **26** in the form of stream **44**. The reconstituted cold desiccant with temperature in the range 85-95° F. is fed into the spray nozzle **22**, which produces the cloud of atomized liquid desiccant droplets **19** to absorb water vapor from the air stream **14**. A first fluid circuit **76** is defined by the circulating passage of the liquid desiccant **15**.

[0027] The bulk of the energy required for dehumidification of the air is used in the regenerator **48** to drive off the moisture from the dilute liquid desiccant **46**. This energy is derived by the array **66** of solar collectors **68** without polluting the environment in the exemplary embodiment of the invention. The next item of energy consumption in the dehumidification process is the energy required to cool the reconstituted liquid desiccant **56** in the storage tank **24**. This energy is derived from the waste cold air stream **42** exhausted from the conditioned space **40**. The energy required to produce the cold air stream **42** comes from the ambient air itself through the evaporation of liquid water in the indirect evaporative cooler **32**. This energy is also free except for the small amount of energy required to operate the axial fan **30**. The last item of energy consumption in the dehumidification process is the energy required to load the liquid desiccant with water vapor. This step generally takes place without energy input other than the energy required to operate the centrifugal blower **12** and the pump **58**. It is thus apparent that the comfort cooling system of the exemplary embodiment of the present invention is very energy efficient deriving energy from the sun and the ambient air free of cost without polluting the environment.

[0028] FIG. **3** shows the operation of the solar-powered heating and cooling system in winter time to provide comfort heating. In the heating mode, the dehumidifier **18** is rendered non-functional and the regenerator **48** with the heating coil **50** is deployed as a heater. The heating coil **50** now functions as a liquid-to-air heat exchanger. By contrast, in cooling mode, it functions as a liquid-to-liquid heat exchanger.

[0029] In the heating mode shown in FIG. **3**, the cold ambient air stream **16** propelled by the centrifugal blower **12** enters the regenerator **48**. The hot coolant **60** from the array of solar collectors **66** provides the heat source for heating the air. The auxiliary heater **74** serves as the heat source for night time operation when there is no sunshine as well as during periods of peak heating load. The heated air stream **76** exits the regenerator **48** being propelled by the axial fan **30**. In heating mode, the third fluid passageway is defined by the passage of ambient air between the inlet of the regenerator **48** and the entrance to the conditioned space **40**.

[0030] The bulk of the hot air stream **76** is directed through the dry channels **37** of the evaporative cooler **32**. If required, a small fraction of the hot air stream **76** can be directed to the wet channels **39** of the evaporative cooler **32** to pick some moisture. The moist air stream **38** exiting the wet channels **39** of the evaporative cooler **32** can be blended with the hot dry air stream **36** exiting the dry channels **37** of the evaporative cooler **32**. Thus blended dry and moist air streams **36**, **38** will provide the required temperature and humidity in winter time for comfort heating in the conditioned space **40**.

[0031] While the invention has been described with reference to an exemplary embodiment, it will be understood by those skilled in the art that various changes may be made and equivalents may be substituted for elements thereof without departing from the scope of the invention. In addition, many modifications may be made to adapt a particular situation or material to the teachings of the invention without departing from the essential scope thereof. Therefore, it is intended that the invention not be limited to the particular embodiment disclosed as the best mode contemplated for carrying out this invention, but that the invention will include all embodiments falling within the scope of the appended claims.

What is claimed is:

1. A method for providing comfort cooling comprising the steps of:

circulating liquid desiccant in a first fluid circuit;

disposing a dehumidifier along the first fluid circuit;

disposing a regenerator along the first fluid circuit downstream of the dehumidifier;

harnessing solar energy with at least one solar collector; and

circulating coolant in a second fluid circuit, the solar collector and the regenerator both disposed along the second fluid circuit whereby the coolant is heated during passage adjacent to the solar collector and transfers thermal energy to the liquid desiccant during passage through the regenerator, the first and second fluid circuits being in parallel in the regenerator.

2. The method of claim **1** further comprising the step of:

disposing an auxiliary heater along the second fluid circuit.

3. The method of claim **1** further comprising the steps of:

directing a stream of ambient air through a third fluid passageway having an inlet and an outlet; and

defining the third fluid passageway at least in part with the dehumidifier and the evaporative cooler to cool the liquid desiccant.

4. The method of claim **3** further comprising the steps of:

forming the evaporative cooler with a plurality of dry channels and a plurality of wet channels; and

bifurcating the stream of ambient air in the evaporative cooler with a first portion of the stream passing through the plurality of dry channels and a second portion passing through the plurality of wet channels.

5. The method of claim **4** further comprising the step of:

recombining the first and second portions of the stream after passage through the evaporative cooler.

6. The method of claim **4** further comprising the step of:

exhausting the second portion of the stream after passage through the plurality of wet channels of the evaporative cooler.

7. The method of claim **1** further comprising the steps of:

stopping said circulating step in order to provide comfort heating;

directing a stream of ambient air through a third fluid passageway having an inlet and an outlet; and

defining the third fluid passageway at least in part with the regenerator and the evaporator cooler to heat the ambient air.

8. The method of claim **7** further comprising the steps of:

forming the evaporative cooler with a plurality of dry channels and a plurality of wet channels; and

bifurcating the stream of ambient air in the evaporative cooler with a first portion of the stream passing through the plurality of dry channels and a second portion passing through the plurality of wet channels.

9. The method of claim **8** further comprising the step of:

recombining the first and second portions of the stream after passage through the evaporative cooler.

* * * * *