US 20080251663A1

(19) **United States**

(12) **Patent Application Publication**

Tracy et al.

(10) **Pub. No.: US 2008/0251663 A1**

(43) **Pub. Date: Oct. 16, 2008**

(54) **ANTI-SKID FOOT ASSEMBLY**

(76) Inventors: **Mark S. Tracy**, Tomball, TX (US); **Jonathan R. Harris**, Cypress, TX (US); **Paul J. Doczy**, Cypress, TX (US)

Correspondence Address:
HEWLETT PACKARD COMPANY
P O BOX 272400, 3404 E. HARMONY ROAD, INTELLECTUAL PROPERTY ADMINISTRATION
FORT COLLINS, CO 80527-2400 (US)

(21) Appl. No.: **11/786,123**

(22) Filed: **Apr. 11, 2007**

Publication Classification

(51) **Int. Cl.**
A47B 91/00 (2006.01)

(52) **U.S. Cl.** **248/188.8**

(57) **ABSTRACT**

An anti-skid foot assembly comprises an anti-skid foot having a closed end and an open end, the closed end configured to rest on a support surface when the anti-skid foot is secured to a device, and wherein the open end comprises an internally threaded cavity for threadably securing the anti-skid foot to the device.

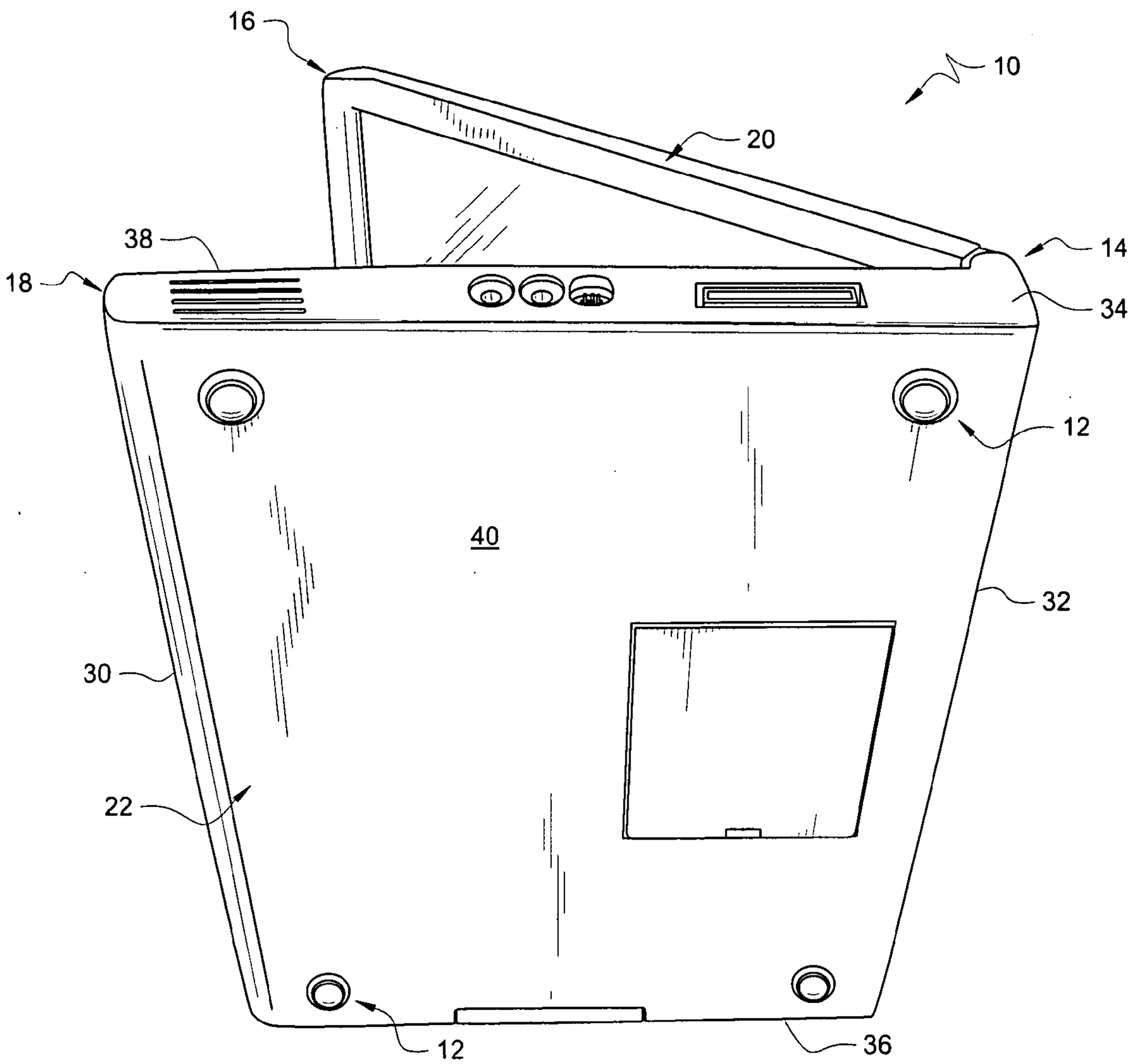

FIG. 1

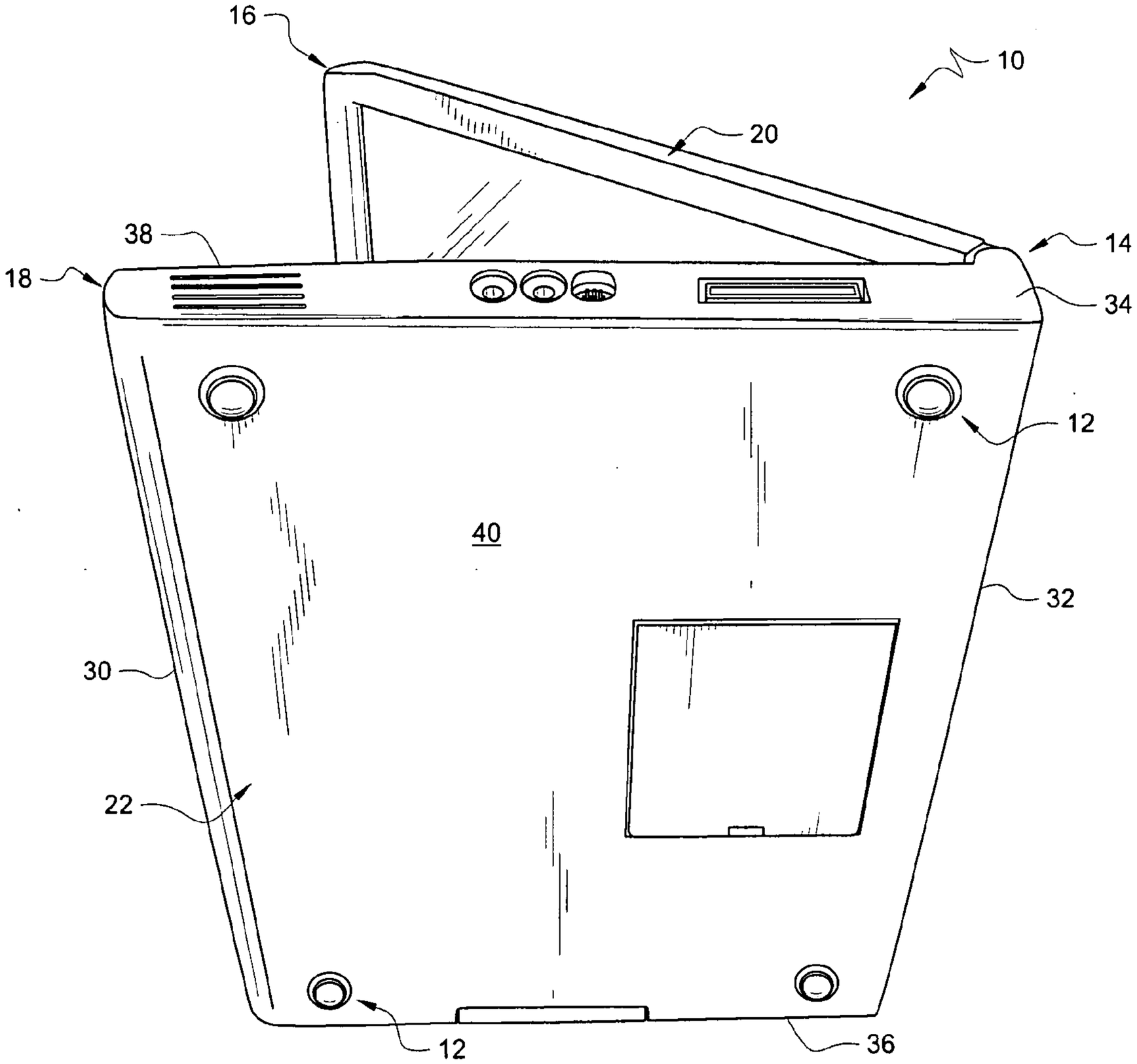

FIG. 2A

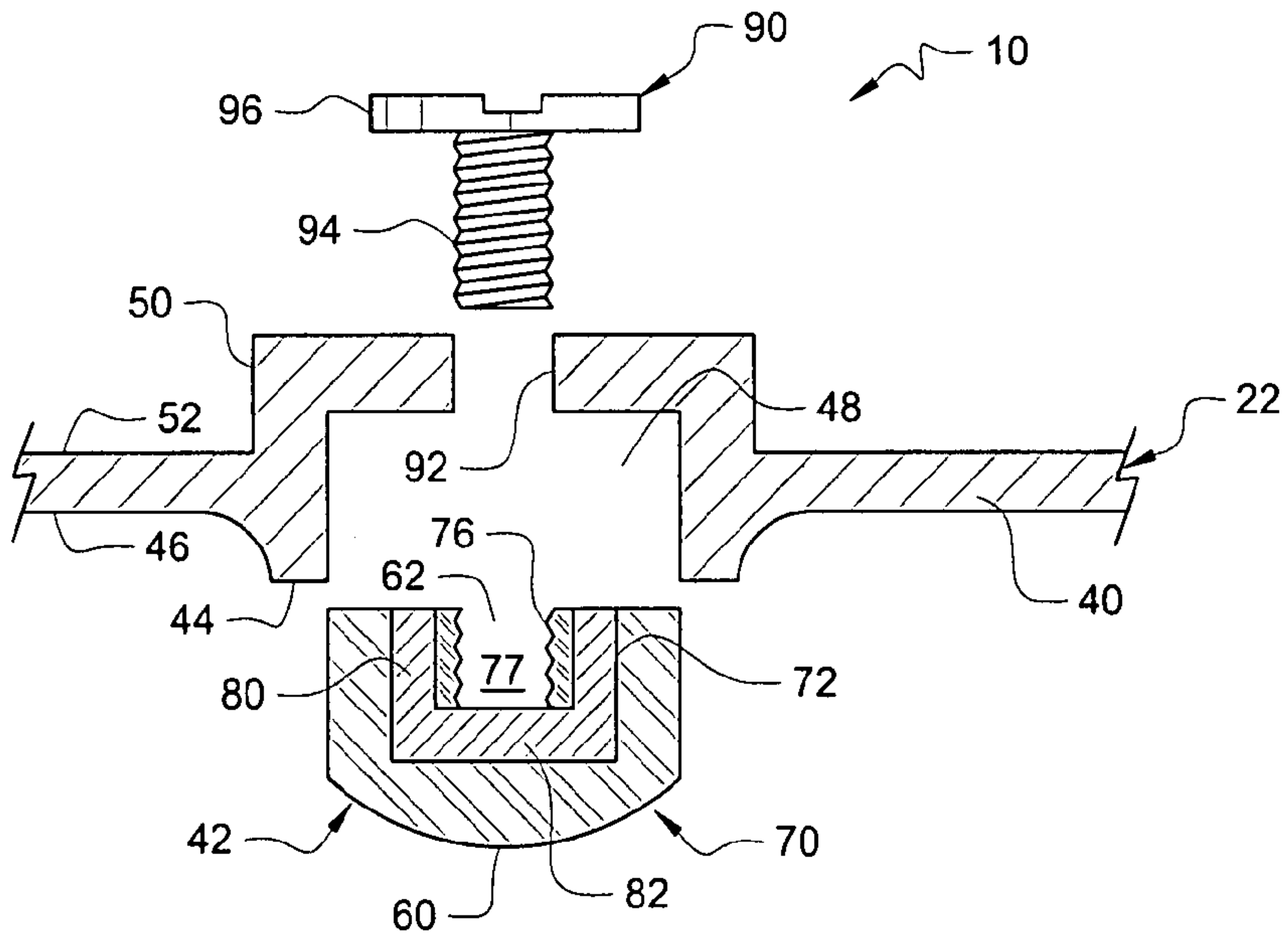

FIG. 2B

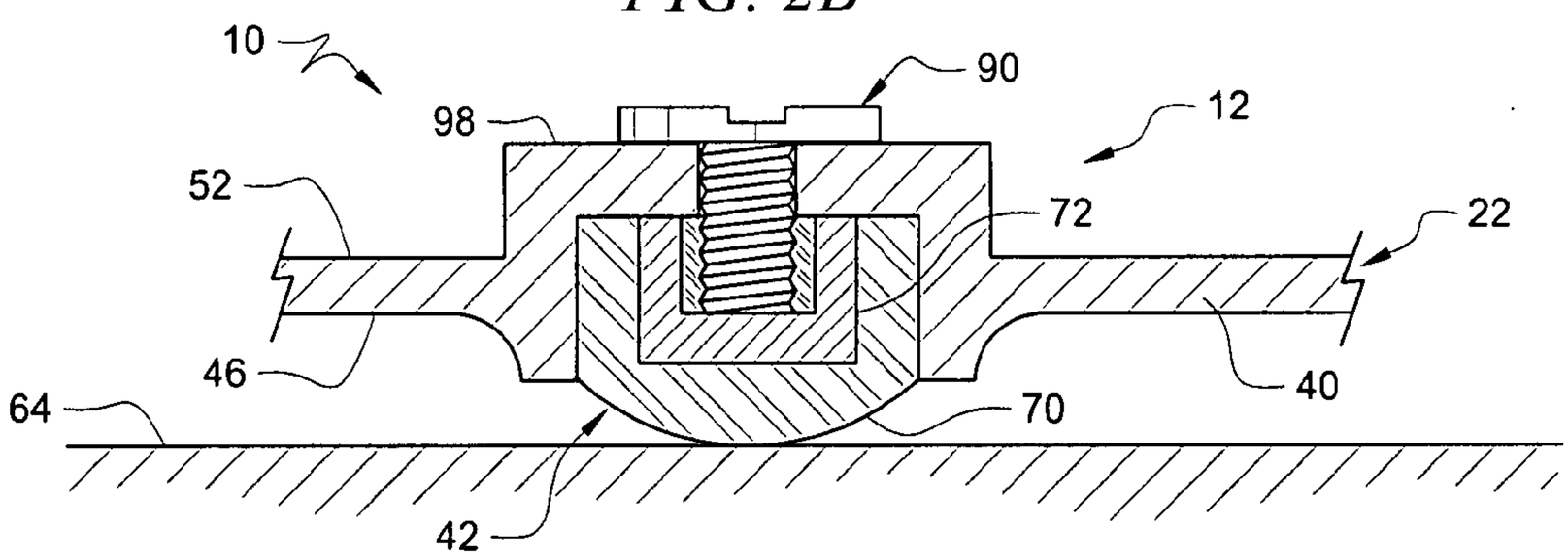

FIG. 3

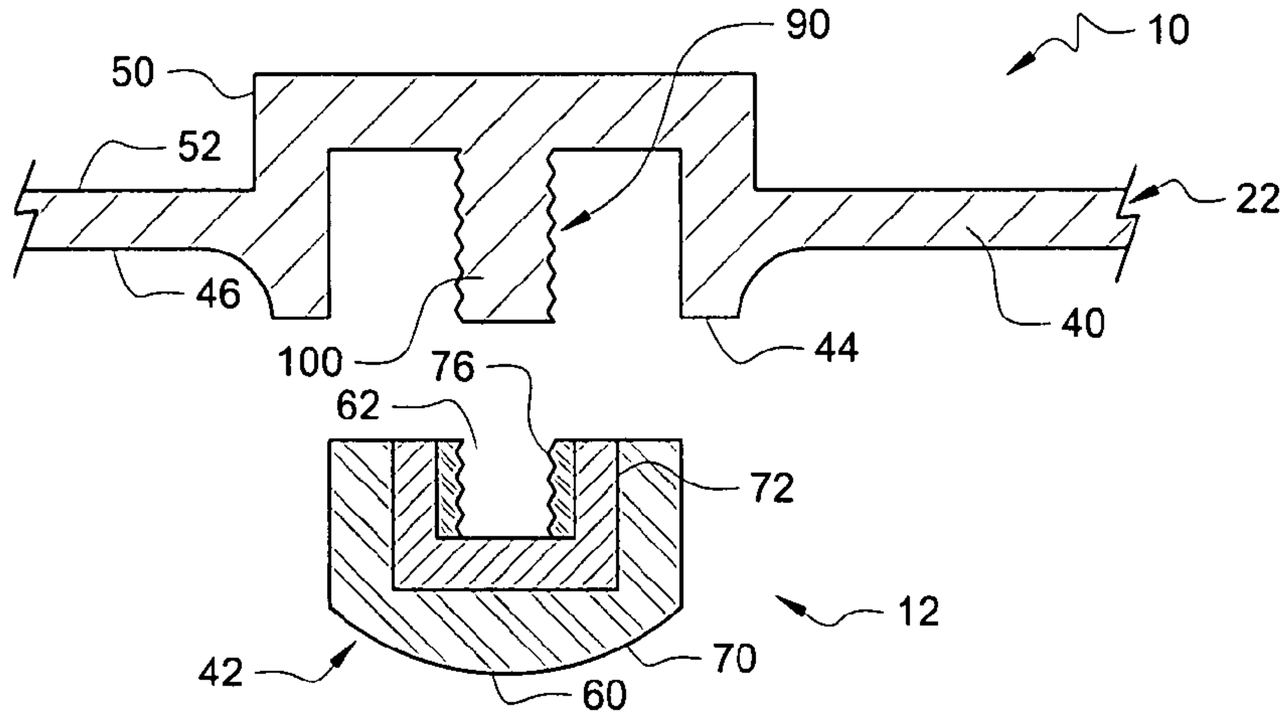

ANTI-SKID FOOT ASSEMBLY

BACKGROUND

[0001] Electronic devices, such as notebook computers, personal digital assistants, gaming devices, etc., and other devices that are generally portable or are susceptible to movement from use thereof have non- or anti-skid feet. These anti-skid feet are generally formed from rubber or soft plastic and are located on the bottom or underside of the device to prevent the device from sliding on a support surface and/or to prevent scratching or marring of the support surface. However, these anti-skid feet are susceptible to falling off or being sheared off, especially if the anti-skid foot was adhesively secured to the device, resulting in the device no longer being level relative to a support surface and probable loss of the anti-skid foot.

BRIEF DESCRIPTION OF THE DRAWINGS

[0002] FIG. **1** is a diagram illustrating an electronic device in which an embodiment of an anti-skid foot assembly is employed to advantage; and

[0003] FIG. **2**A is a diagram illustrating an exploded assembly view of an embodiment of the anti-skid foot assembly of FIG. **1**;

[0004] FIG. **2**B is a diagram illustrating an assembled view of the embodiment of the anti-skid foot assembly of FIG. **2**A; and

[0005] FIG. **3** is a diagram illustrating another embodiment of an anti-skid foot assembly.

DETAILED DESCRIPTION OF THE DRAWINGS

[0006] FIG. **1** is a diagram illustrating an electronic device **10** in which an embodiment of an anti-skid foot assembly **12** is employed to advantage. In the embodiment illustrated in FIG. **1**, electronic device **10** comprises a notebook or laptop computer **14** having a display member **16** rotatably coupled to a base member **18**. However, it should be understood that anti-skid foot assembly **12** may be incorporated and/or otherwise used with other types of devices, electronic or non-electronic, such as, but not limited to, a personal digital assistant, tablet computer, and gaming device. In the embodiment illustrated in FIG. **1**, display member **16** and base member **18** each comprise a housing **20** and **22**, respectively. Each of housings **20** and **22** generally comprises various walls located on various edges, sides and/or surfaces thereof. For example, in the embodiment illustrated in FIG. **1**, housing **22** comprises a front wall **30**, a rear wall **32**, oppositely disposed side walls **34** and **36**, an upper wall or working surface **38**, and a bottom wall **40**. In the embodiment illustrated in FIG. **1**, four anti-skid foot assemblies **12** are illustrated as being disposed on bottom wall **40**. However, it should be understood that the quantity of anti-skid foot assemblies **12** may be varied, and the locations of anti-skid foot assemblies **12** on device **10** may be varied. In FIG. **1**, anti skid foot assemblies **12** are illustrated having a round or circular configuration. However, it should be understood that anti-skid foot assemblies **12** may be configured having square, rectangular, elliptical, or another type of geometric configuration.

[0007] FIG. **2**A is a diagram illustrating an exploded assembly view of anti-skid foot assembly **12** of FIG. **1**, and FIG. **2**B is a diagram illustrating an assembled view of anti-skid foot assembly **12** of FIG. **2**A. In the embodiment illustrated in FIGS. **2**A and **2**B, anti-skid foot assembly **12** comprises an anti-skid foot **42** couplable to device **10**. For example, in the embodiment illustrated in FIGS. **2**A and **2**B, bottom wall **40** of housing **22** comprises an annular shoulder **44** (e.g., extending outwardly or away from an exterior surface **46** of bottom wall **40**) forming a cylindrically-shaped cavity **48** for receiving anti-skid foot **42** therein. In the embodiment illustrated in FIGS. **2**A and **2**B, bottom wall **40** also comprises an annular shoulder **50** extending inwardly from an interior surface **52** of bottom wall **40** to facilitate forming of cavity **48**. However, it should be understood that housing **22** may be otherwise configured for receiving and/or otherwise engaging anti-skid foot **42** (e.g., in some embodiments, anti-skid foot **42** may be attached directly to a planar surface of housing **22**). In the embodiment illustrated in FIGS. **2**A and **2**B, cavity **48** substantially reduces the likelihood of anti-skid foot **42** being sheared away from device **10** at least because shoulder **44** and corresponding walls surrounding cavity **48** substantially reduce a moment arm of any force applied to anti-skid foot **42** in a direction substantially parallel or planar to support surface **64**.

[0008] In the embodiment illustrated in FIGS. **2**A and **2**B, anti-skid foot **42** comprises a closed end **60** and an open end **62**. In operation, anti-skid foot **42** is attached and/or otherwise coupled to housing **22** such that closed end **60** is disposed against and/or otherwise positioned to rest on a support surface **64** when anti-skid foot **42** is coupled to device **10** and device **10** is positioned to rest on support surface **64**. In the embodiment illustrated in FIGS. **2**A and **2**B, anti-skid foot **42** comprises an outer portion **70** and an inner substrate portion **72**. In some embodiments, outer portion **70** comprises an elastomer material such as, but not limited to, a thermoplastic elastomer, thermoplastic urethane, thermoplastic rubber or other material having anti-skid properties that preferably will not scratch or mar support surface **64** and is at least somewhat flexible and or resilient. In some embodiments, substrate portion **72** comprises a rigid, high-strength thermoplastic such as, but not limited to, polycarbonate. However, it should be understood that the materials used to form anti-skid foot **42** may be otherwise varied. In some embodiments, anti-skid foot **42** is manufactured using an injection molding process such that outer portion **70** is overmolded onto substrate portion **72**, thereby creating a chemical or cross-linked bond between the materials forming outer portion **70** and substrate portion **72**. As illustrated in FIGS. **2**A and **2**B, outer portion **70** is disposed over and/or otherwise covers at least the portion of substrate portion **72** near closed end **60** such that only outer portion **70** is disposed in contact with support surface **64**.

[0009] In the embodiment illustrated in FIGS. **2**A and **2**B, anti-skid foot **42** also comprises a threaded insert **76** disposed within an annular shaped cavity **77** formed by substrate portion **72**. For example, in the embodiment illustrated in FIGS. **2**A and **2**B, substrate portion **72** comprises an annular wall **80** and a cross wall **82**, thereby forming a cap-shaped substrate portion **72**. In the embodiment illustrated in FIGS. **2**A and **2**B, threaded insert **76** is disposed within cavity **77** formed by substrate portion **72** such that anti-skid foot **42** is internally threaded to facilitate engagement of anti-skid foot **42** with an externally threaded member. In some embodiments, threaded insert **76** is ultrasonically welded or heat inserted into cavity **77** and to substrate portion **72** to fixedly secure threaded insert **76** to anti-skid foot **42**. However, it should be understood that anti-skid foot **42** may be otherwise configured to be internally threaded (e.g., in some embodiments, threads may be formed directly on wall **80** of substrate portion **72**).

[0010] In the embodiment illustrated in FIGS. **2**A and **2**B, anti-skid foot assembly **12** comprises an externally threaded member **90** (e.g., a screw or other type of fastening member) insertable through an opening **92** formed in housing **22** such that a threaded portion **94** of member **90** extends outwardly from and/or downwardly relative to housing **22** for engagement with threaded insert **76** of anti-skid foot **42**. For

example, in the embodiment illustrated in FIGS. **2**A and **2**B, threaded portion **94** is inserted through opening **92** to threadably engage threaded insert **76** of anti-skid foot **42** such that anti-skid foot **42** is positioned and/or otherwise retained within cavity **48** by a head portion **96** of threaded member **90** seated against an interior surface **98** of bottom wall **40**. In some embodiments, a thread retention adhesive may be used to further secure anti-skid foot **42** to threaded member **90**.

[0011] FIG. **3** is a diagram illustrating another embodiment of anti-skid foot assembly **12**. In the embodiment illustrated in FIG. **3**, threaded member **90** is formed and/or otherwise manufactured as an integral member of housing **22** and/or bottom wall **40** (e.g., a single, unitary structure). Thus, in this embodiment, anti-skid foot **12** threadably engages an outwardly extending threaded extension **100** of housing **22** to secure anti-skid foot **42** to housing **22**. However, it should be understood that the extension **100** may be otherwise formed (e.g., as a separate and/or discrete component welded, bonded, or otherwise secured to housing **22**).

[0012] Thus, embodiments of anti-skid foot assembly **12** provide an anti-skid foot **42** that is resistant to being sheared off or peeled away from device **10**. Embodiments of anti-skid foot assembly **12** provide an anti-skid foot **42** that is also resistant to contaminants that may otherwise adversely affect an adhesive-based bond of an anti-skid foot to a device.

1. An anti-skid foot assembly, comprising:

an anti-skid foot removably couplable to a device via a threaded member configured to seat against an interior surface of a housing of the device, the anti-skid foot having a closed end and an open end, the closed end configured to rest on a support surface when the anti-skid foot is secured to the device, and wherein the open end comprises an internally threaded cavity for threadably securing the anti-skid foot to the device.

2. The anti-skid foot assembly of claim **1**, wherein the anti-skid foot comprises an elastomer portion molded to a rigid substrate.

3. The anti-skid foot assembly of claim **2**, wherein the elastomer portion is disposed over at least a portion of the closed end for resting on the support surface.

4. The anti-skid foot assembly of claim **1**, wherein the internally threaded cavity comprises a threaded insert fixedly secured therein.

5. The anti-skid foot assembly of claim **1**, wherein the anti-skid foot comprises an outer elastomer portion and an inner rigid portion.

6. The anti-skid foot assembly of claim **5**, wherein the internally threaded cavity comprises a threaded insert fixedly secured to the inner rigid portion.

7. An anti-skid foot assembly, comprising:

a device having a housing; and

an internally threaded anti-skid foot removably couplable to the device via a threaded member configured to seat against an interior surface of the housing and extending outwardly from the housing, the anti-skid foot having a closed end configured to rest on a support surface when the anti-skid foot is coupled to the housing.

8. The anti-skid foot assembly of claim **7**, wherein the threaded member extends through an opening formed in the housing to engage the anti-skid foot.

9. The anti-skid foot assembly of claim **7**, wherein the anti-skid foot comprises an elastomer portion molded to a rigid substrate.

10. The anti-skid foot assembly of claim **7**, wherein the anti-skid foot comprises a threaded insert fixedly secured therein.

11. The anti-skid foot assembly of claim **7**, wherein the anti-skid foot comprises an outer elastomer portion and an inner rigid portion.

12. The anti-skid foot assembly of claim **7**, wherein the anti-skid foot comprises an elastomer portion overmolded onto a rigid thermoplastic portion.

13. The anti-skid foot assembly of claim **7**, wherein the anti-skid foot is disposed at least partially in an cavity formed in the housing.

14. A method for manufacturing an anti-skid foot assembly, comprising:

providing a device having a housing; and

removably coupling an internally threaded anti-skid foot to the device with a threaded member configured to seat against an interior surface of the housing and extending outwardly from the housing, the anti-skid foot having a closed end configured to rest on a support surface when the anti-skid foot is coupled to the housing.

15. The method of claim **14**, wherein coupling the anti-skid foot to the housing comprises threadably engaging the anti-skid foot to a threaded member extending through an opening of the housing.

16. The method of claim **14**, further comprising providing the anti-skid foot having a threaded insert disposed therein.

17. The method of claim **14**, further comprising providing the anti-skid foot having an elastomer portion molded to a rigid substrate.

18. The method of claim **14**, further comprising providing the anti-skid foot having an outer elastomer portion and an inner rigid portion.

19. An anti-skid foot assembly, comprising:

a housing means;

an anti-skid means having an open end and a closed end, the closed end configured to rest on a support surface when the anti-skid means is coupled to the housing means; and

means for threadably coupling the open end of the anti-skid means to the housing means, the means for threadably coupling configured to removably couple the anti-skid means to the housing means and to seat against an interior surface of the housing means.

20. The anti-skid foot assembly of claim **19**, wherein the anti-skid means comprises an elastomer means molded onto a rigid substrate means.

21. An anti-skid foot assembly, comprising:

an anti-skid foot removably couplable to a device via a threaded member configured to extend through an opening formed in a housing of the device, the anti-skid foot having a closed end and an open end, the closed end configured to rest on a support surface when the anti-skid foot is secured to the device, and wherein the open end comprises an internally threaded cavity for threadably securing the anti-skid foot to the device via the threaded member.

22. The anti-skid foot assembly of claim **21**, wherein the internally threaded cavity comprises a threaded insert fixedly secured therein.

23. The anti-skid foot assembly of claim **21**, wherein the anti-skid foot comprises an outer elastomer portion and an inner rigid portion.

* * * * *