US 20080191663A1

(19) **United States**

(12) **Patent Application Publication**

Fowler et al.

(10) **Pub. No.: US 2008/0191663 A1**

(43) **Pub. Date: Aug. 14, 2008**

(54) **BIDIRECTIONAL POWER CONVERTER FOR BALANCING STATE OF CHARGE AMONG SERIES CONNECTED ELECTRICAL ENERGY STORAGE UNITS**

(75) Inventors: **J. Thomas Fowler**, Marblehead, MA (US); **Allan Chertok**, Bedford, MA (US); **Darrell J. King**, Belmont, MA (US); **Gerald R. Larocque**, Bedford, MA (US); **Per Onnerud**, Framingham, MA (US); **Jay J. Shi**, Acton, MA (US)

Correspondence Address:
OCCHIUTI ROHLICEK & TSAO, LLP
10 FAWCETT STREET
CAMBRIDGE, MA 02138

(73) Assignee: **TIAX LLC**, Cambridge, MA (US)

(21) Appl. No.: **12/105,846**

(22) Filed: **Apr. 18, 2008**

Related U.S. Application Data

(63) Continuation of application No. 10/717,207, filed on Nov. 19, 2003, now Pat. No. 7,378,818.

(60) Provisional application No. 60/464,391, filed on Apr. 18, 2003, provisional application No. 60/428,666, filed on Nov. 25, 2002.

Publication Classification

(51) **Int. Cl.**
H02J 7/00 (2006.01)

(52) **U.S. Cl.** **320/118**

(57) **ABSTRACT**

A system is provided for balancing state of charge among plural series connected electrical energy storage units that includes a power converter that selectively couples to an individual storage unit of the a string of electrical energy storage units and transfers energy by bidirectionally between the individual storage unit and the string of storage units.

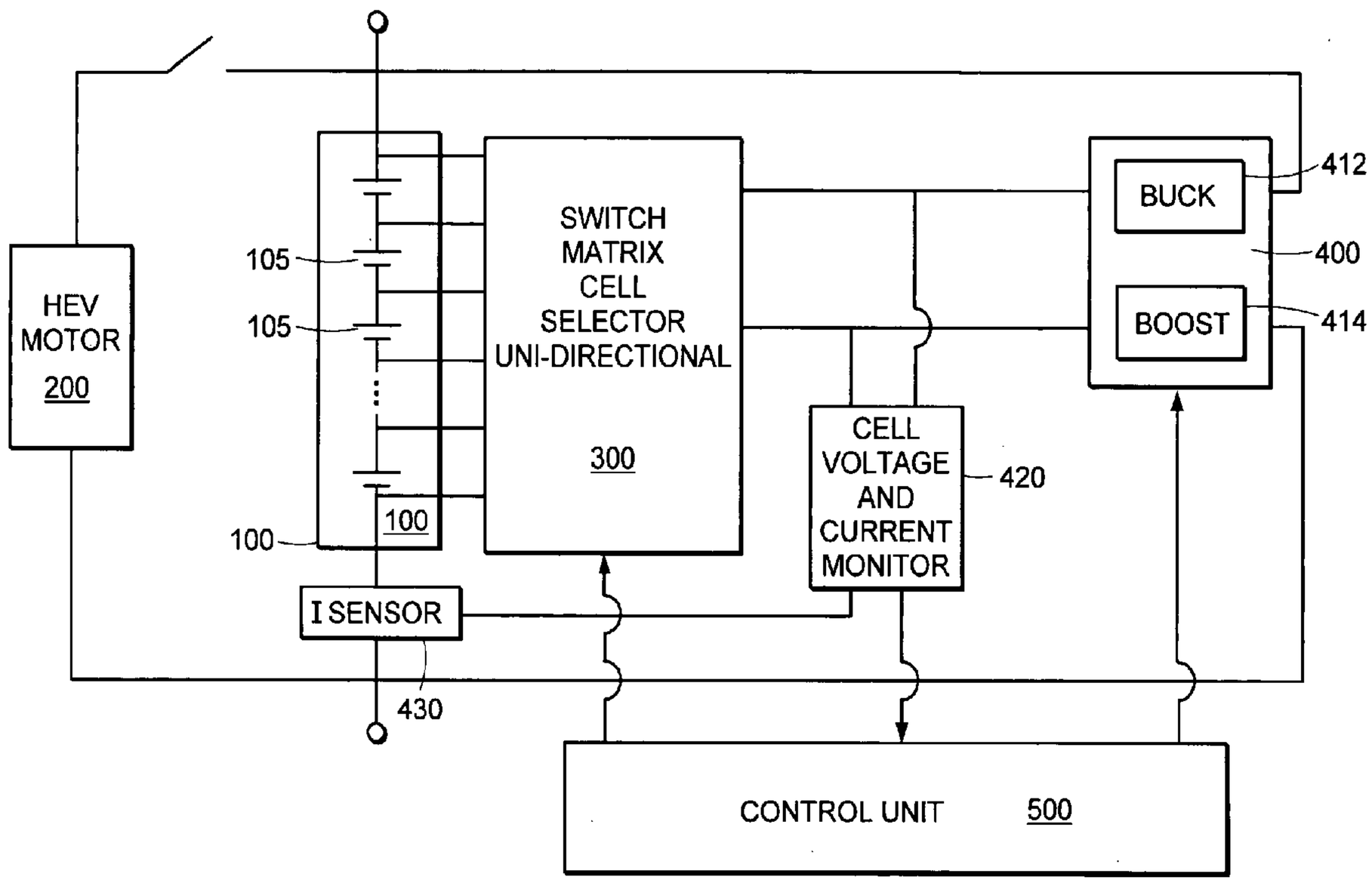

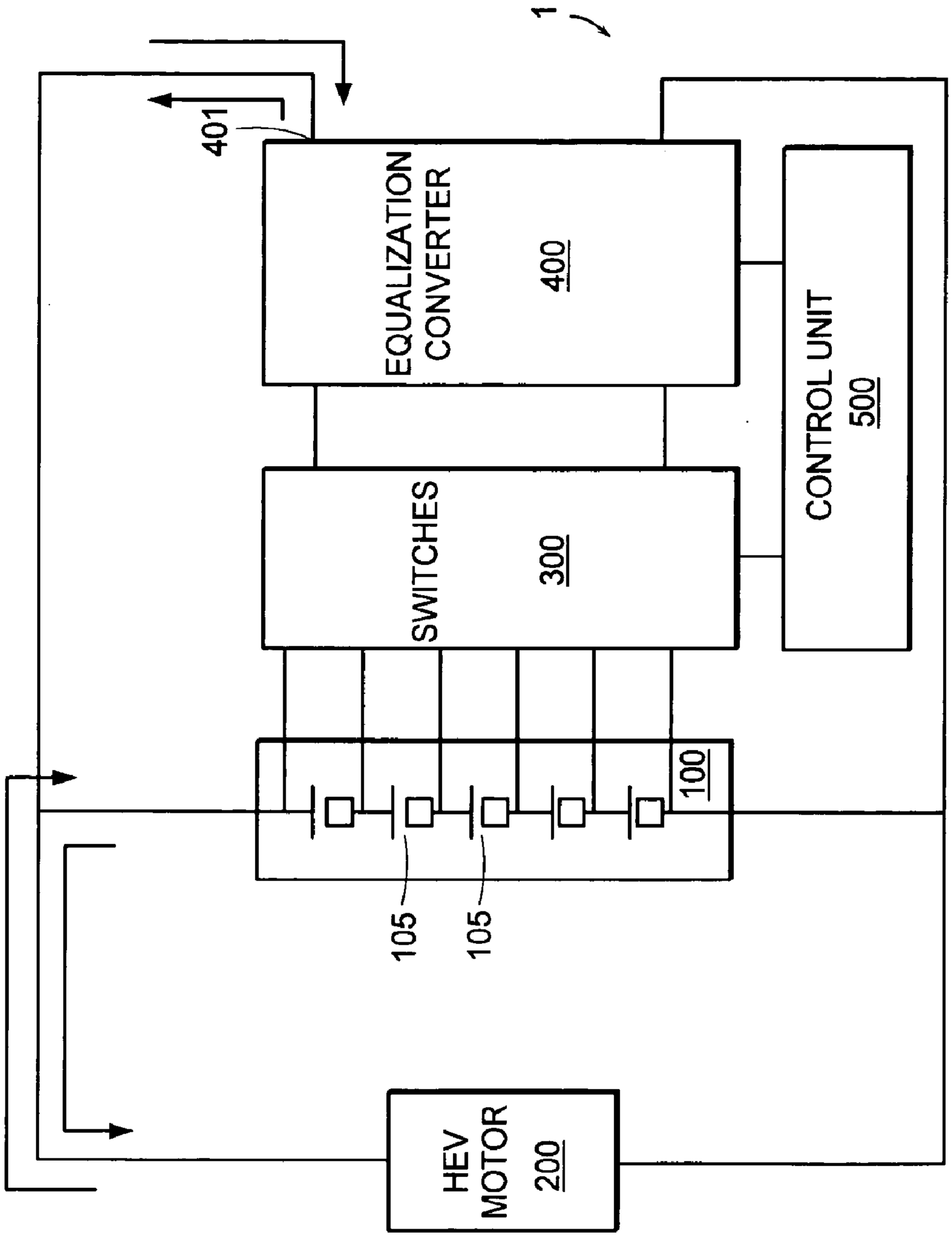
1
401
EQUALIZATION CONVERTER
400
SWITCHES
300
CONTROL UNIT
500
100
105
105
HEV MOTOR
200

FIG. 1

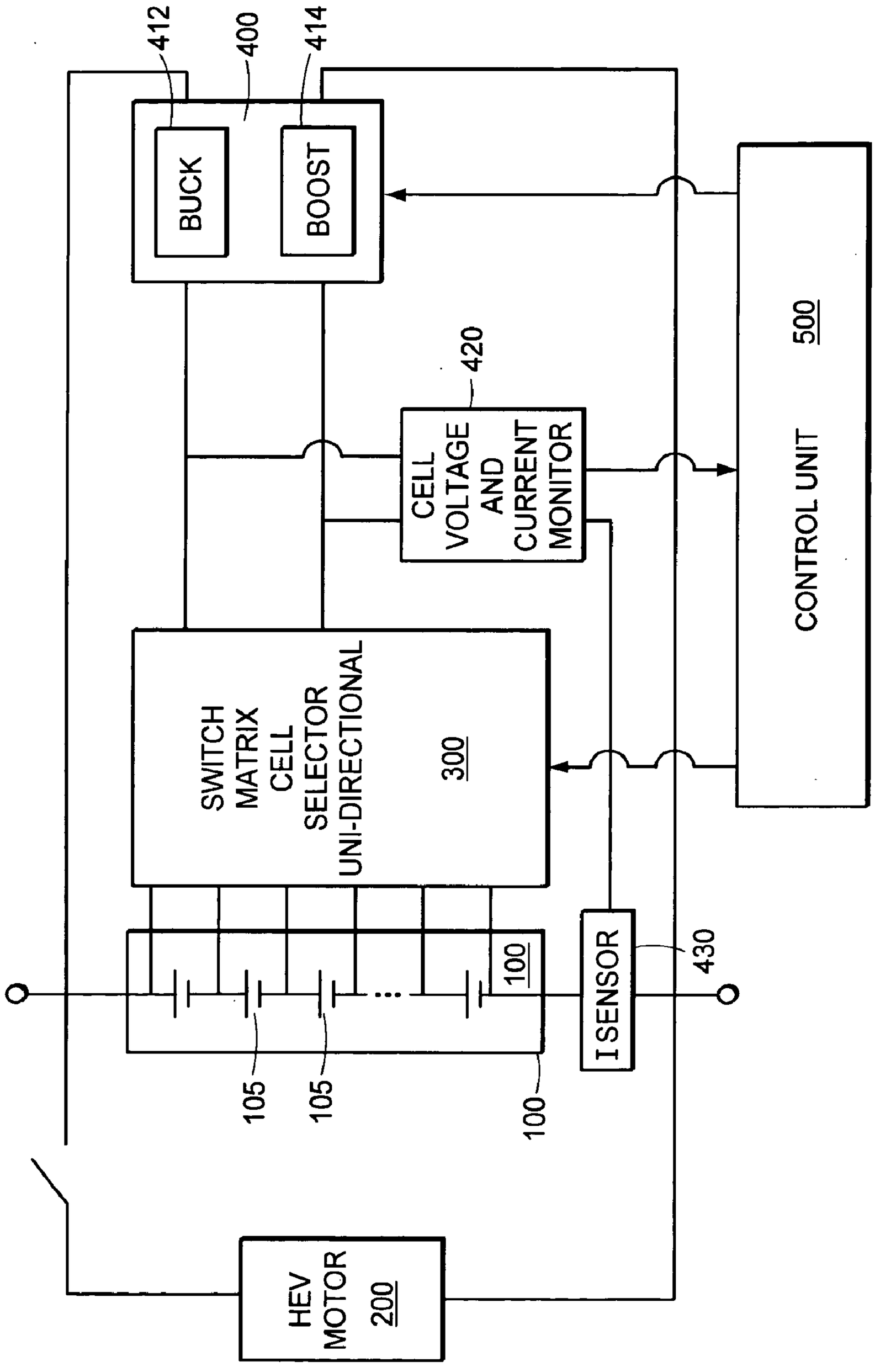
412
400
414
BUCK
BOOST
500
420
CELL VOLTAGE AND CURRENT MONITOR
CONTROL UNIT
SWITCH MATRIX CELL SELECTOR UNI-DIRECTIONAL
300
100
ISENSOR
430
105
105
100
HEV MOTOR
200

FIG. 2

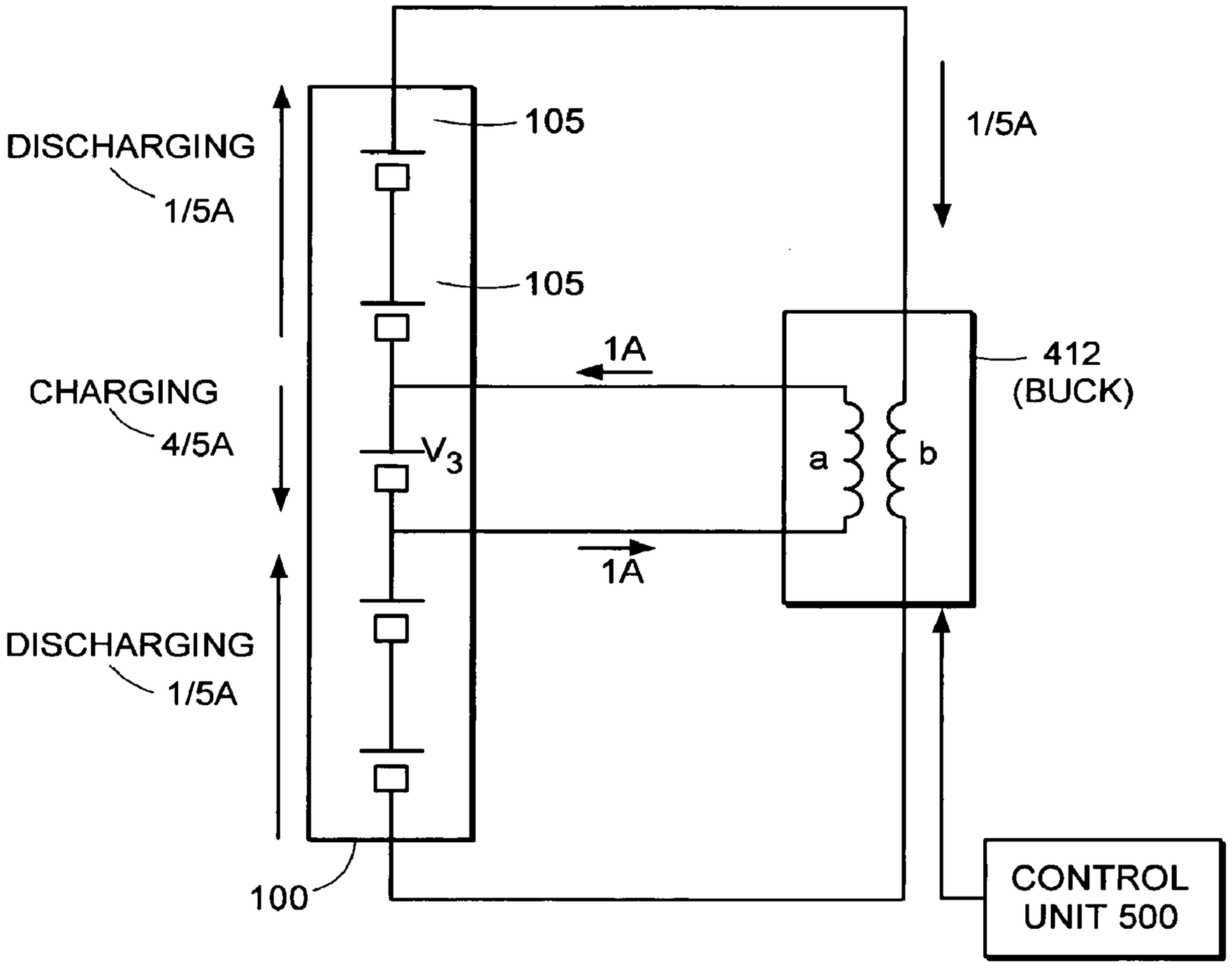
DISCHARGING
1/5A
105
105
1/5A
CHARGING
4/5A
1A
412
(BUCK)
V_3
a
b
1A
DISCHARGING
1/5A
100
CONTROL
UNIT 500

FIG. 3A

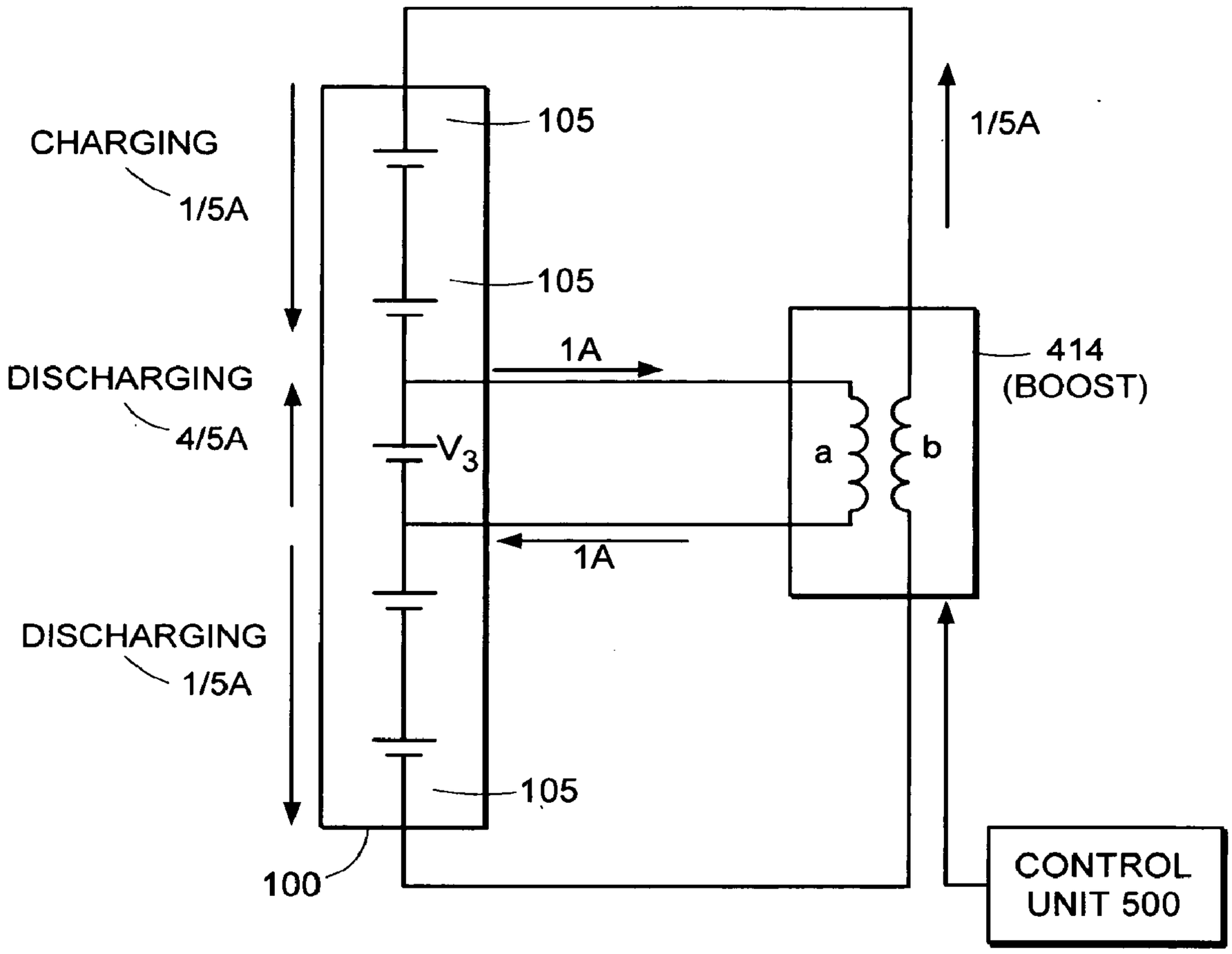
CHARGING
1/5A
DISCHARGING
4/5A
DISCHARGING
1/5A
105
105
105
100
1/5A
1A
1A
V_3
a
b
414
(BOOST)
CONTROL
UNIT 500

FIG. 3B

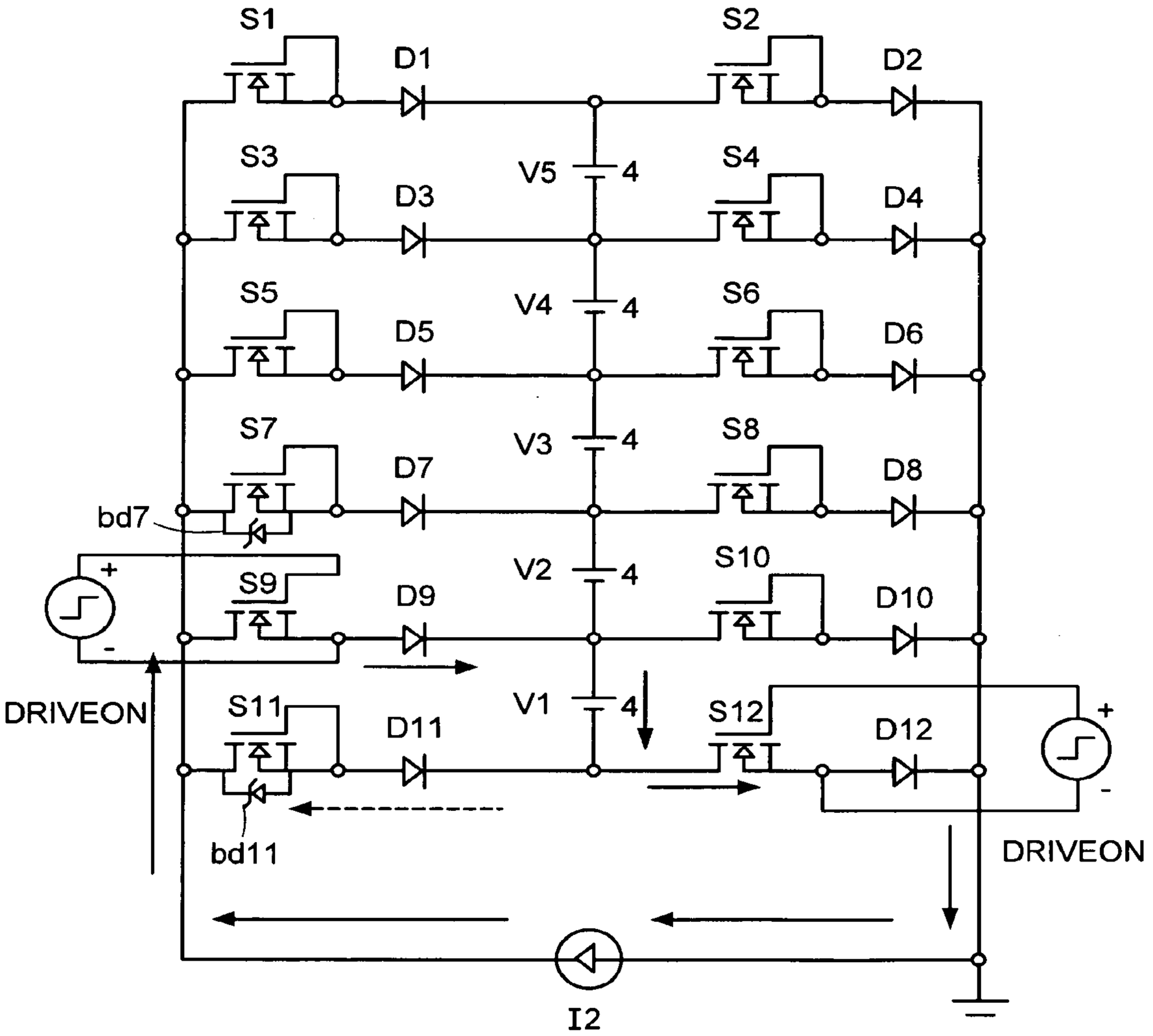
S1
D1
S2
D2
S3
V5
4
S4
D3
D4
S5
V4
4
S6
D5
D6
S7
V3
4
S8
D7
D8
bd7
V2
4
S10
S9
D9
D10
DRIVEON
V1
4
S11
D11
S12
D12
bd11
DRIVEON
I2

FIG. 4A

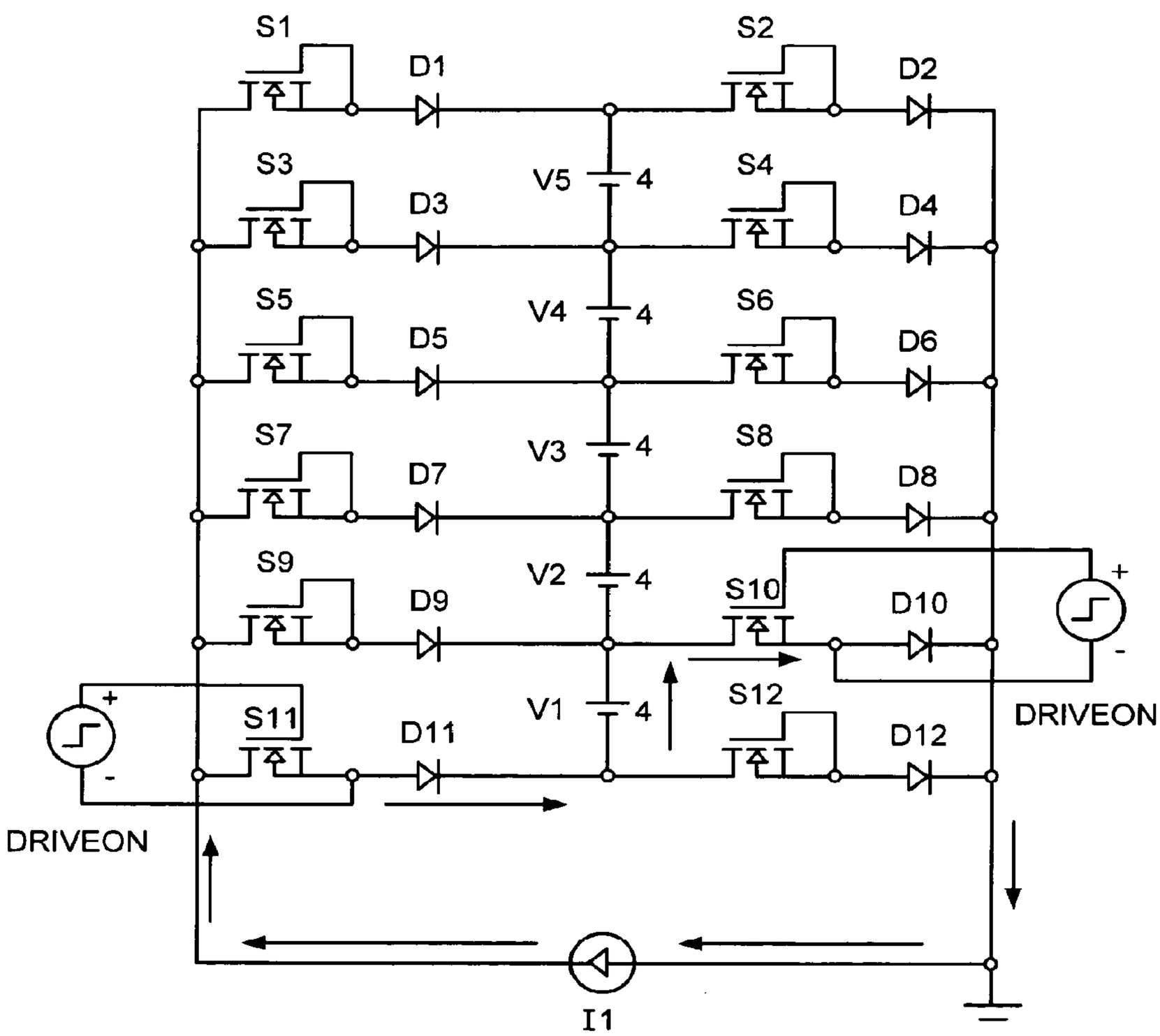
S1
S2
D1
D2
S3
V5
4
S4
D3
D4
S5
V4
4
S6
D5
D6
S7
V3
4
S8
D7
D8
S9
V2
4
S10
D9
D10
+
-
DRIVEON
S11
V1
4
S12
D11
D12
+
-
DRIVEON
I1

FIG. 4B

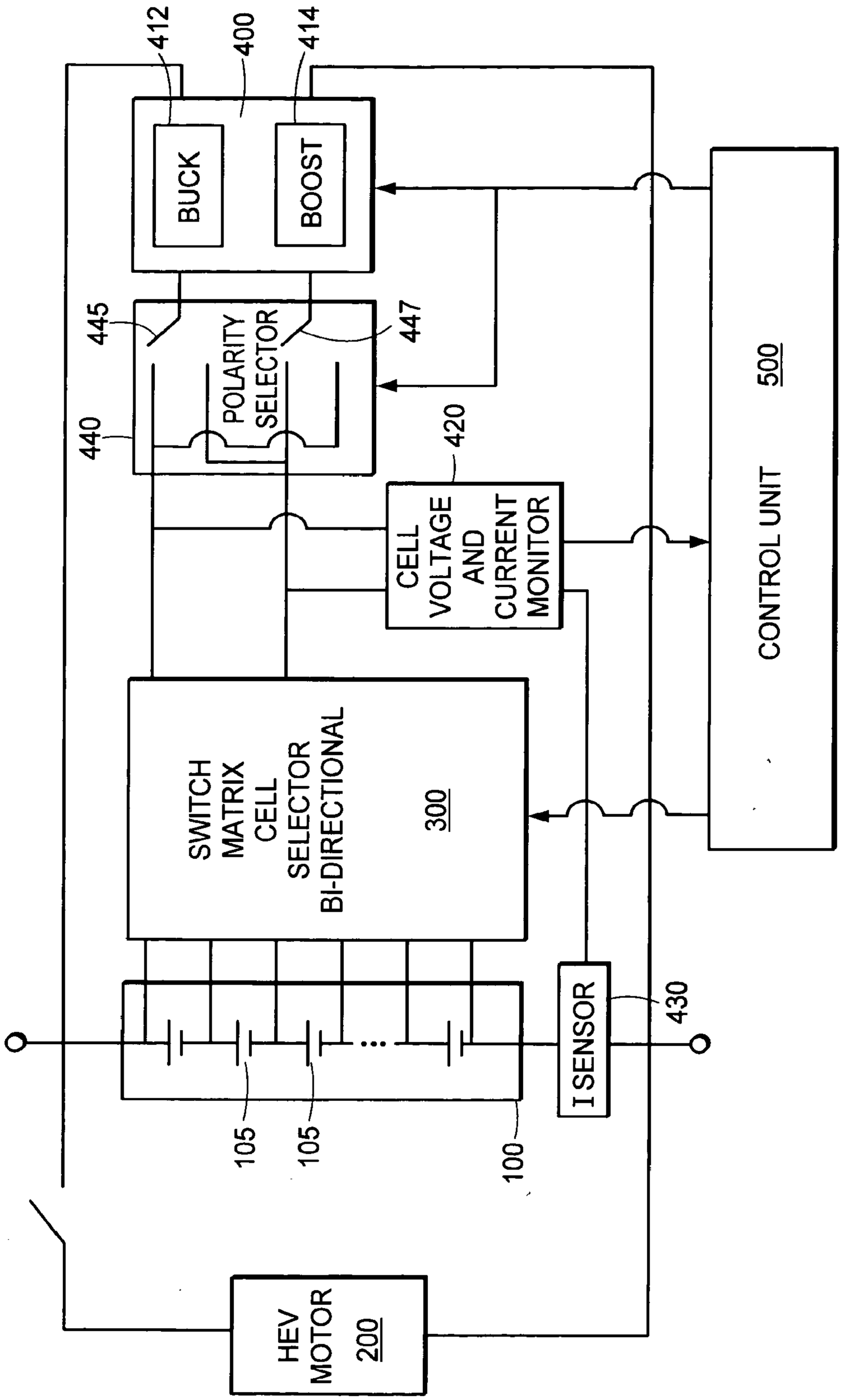
412
400
414
BUCK
BOOST
445
447
POLARITY SELECTOR
440
420
CELL VOLTAGE AND CURRENT MONITOR
CONTROL UNIT
500
SWITCH MATRIX CELL SELECTOR BI-DIRECTIONAL
300
ISENSOR
430
105
105
100
HEV MOTOR
200

FIG. 5

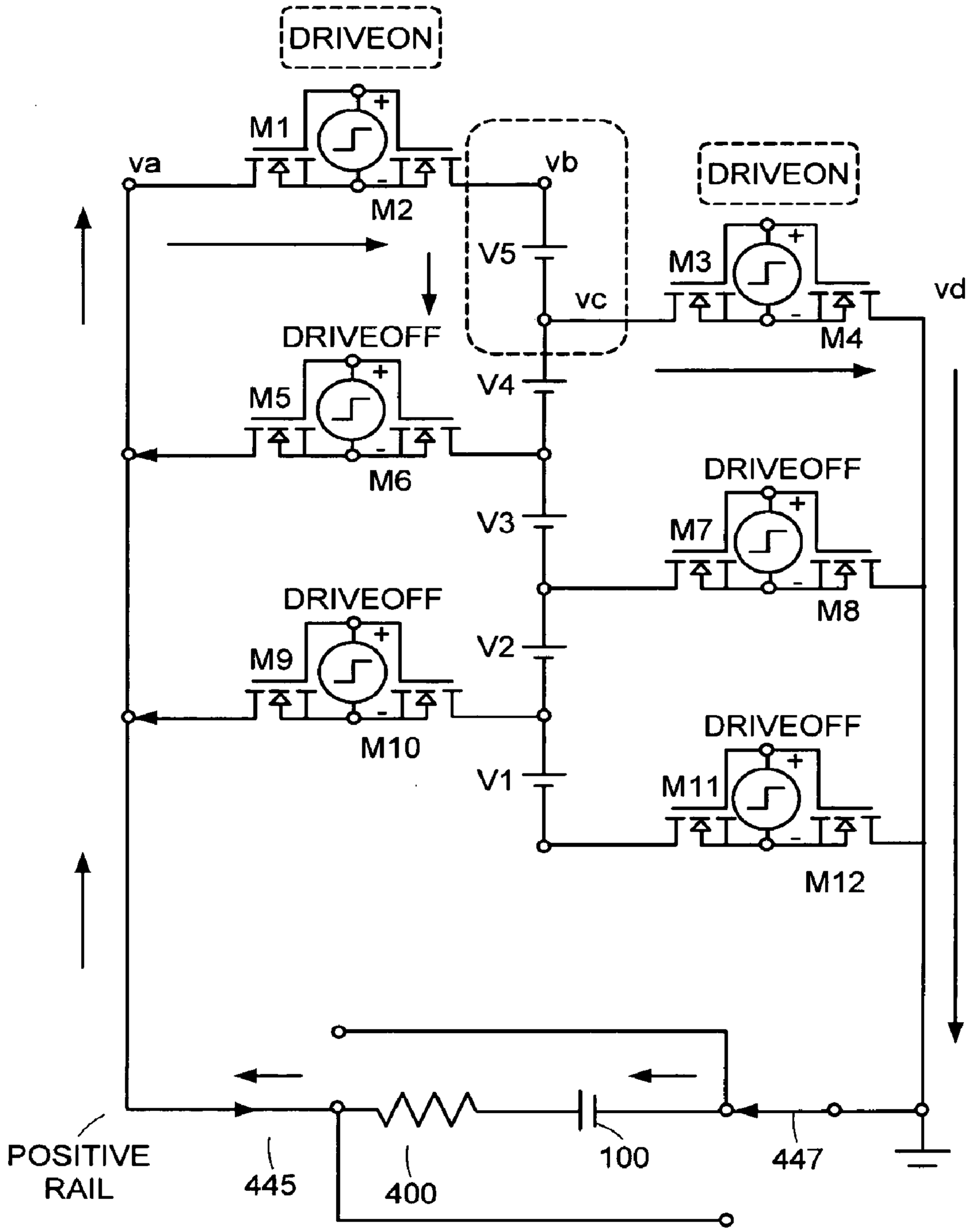
DRIVEON
M1
va
vb
M2
V5
DRIVEON
M3
vd
vc
M4
DRIVEOFF
M5
V4
M6
V3
DRIVEOFF
M7
M8
DRIVEOFF
M9
V2
M10
DRIVEOFF
V1
M11
M12
POSITIVE RAIL
445
400
100
447

FIG. 6A

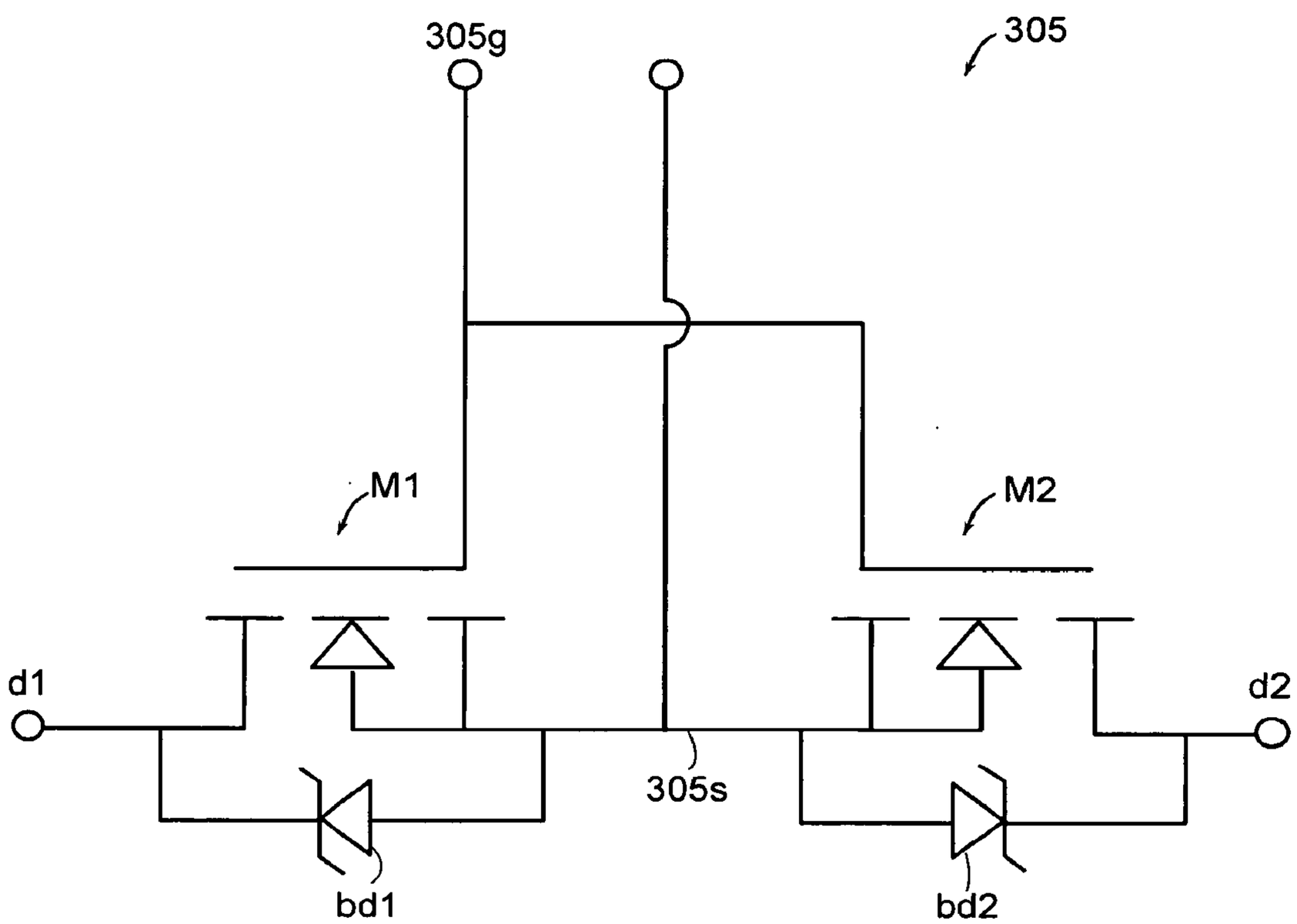

FIG. 6B

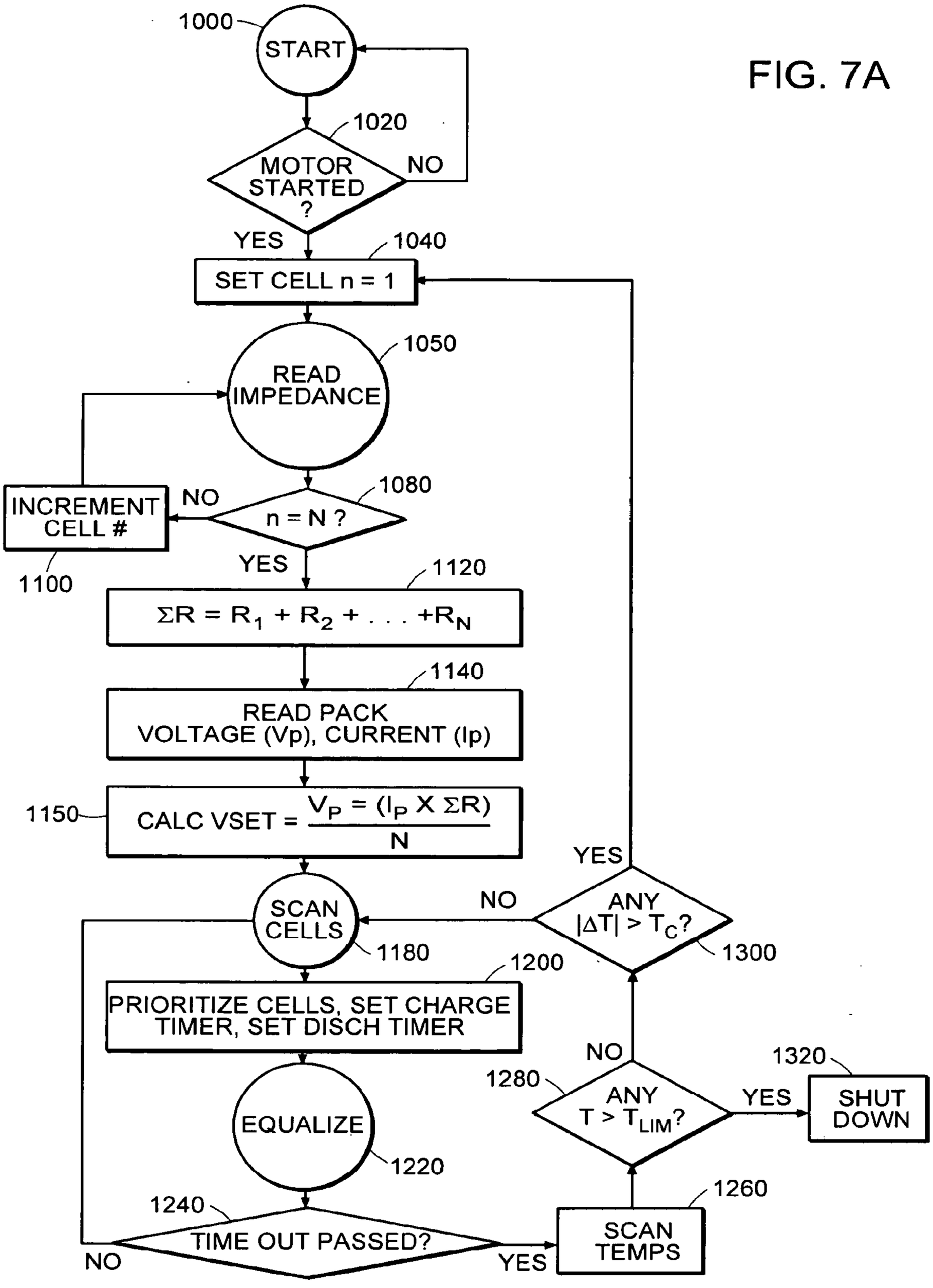
1000
START
1020
MOTOR STARTED ?
NO
YES
1040
SET CELL n = 1
1050
READ IMPEDANCE
1080
n = N ?
NO
INCREMENT CELL #
1100
YES
1120
ΣR = R1 + R2 + . . . +RN
1140
READ PACK VOLTAGE (Vp), CURRENT (Ip)
1150
CALC VSET = VP = (IP X ΣR) / N
SCAN CELLS
1180
1200
PRIORITIZE CELLS, SET CHARGE TIMER, SET DISCH TIMER
EQUALIZE
1220
1240
TIME OUT PASSED?
NO
YES
YES
ANY |ΔT| > TC?
1300
NO
1280
ANY T > TLIM?
YES
1320
SHUT DOWN
1260
SCAN TEMPS

FIG. 7A

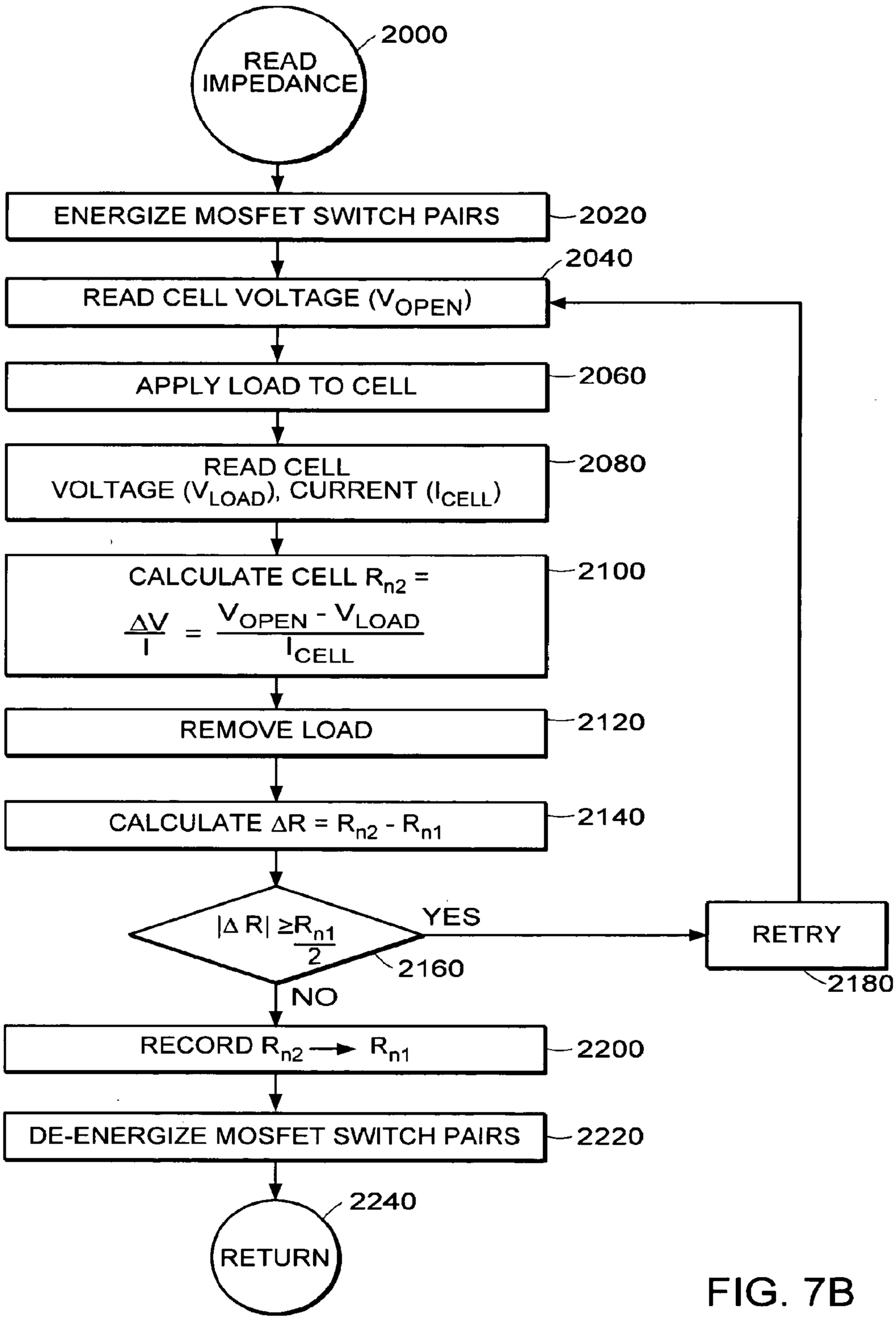
READ IMPEDANCE
2000
ENERGIZE MOSFET SWITCH PAIRS
2020
READ CELL VOLTAGE (V_{OPEN})
2040
APPLY LOAD TO CELL
2060
READ CELL VOLTAGE (V_{LOAD}), CURRENT (I_{CELL})
2080
CALCULATE CELL R_{n2} = $\frac{\Delta V}{I} = \frac{V_{OPEN} - V_{LOAD}}{I_{CELL}}$
2100
REMOVE LOAD
2120
CALCULATE $\Delta R = R_{n2} - R_{n1}$
2140
$|\Delta R| \geq \frac{R_{n1}}{2}$
2160
YES
NO
RETRY
2180
RECORD $R_{n2} \rightarrow R_{n1}$
2200
DE-ENERGIZE MOSFET SWITCH PAIRS
2220
RETURN
2240

FIG. 7B

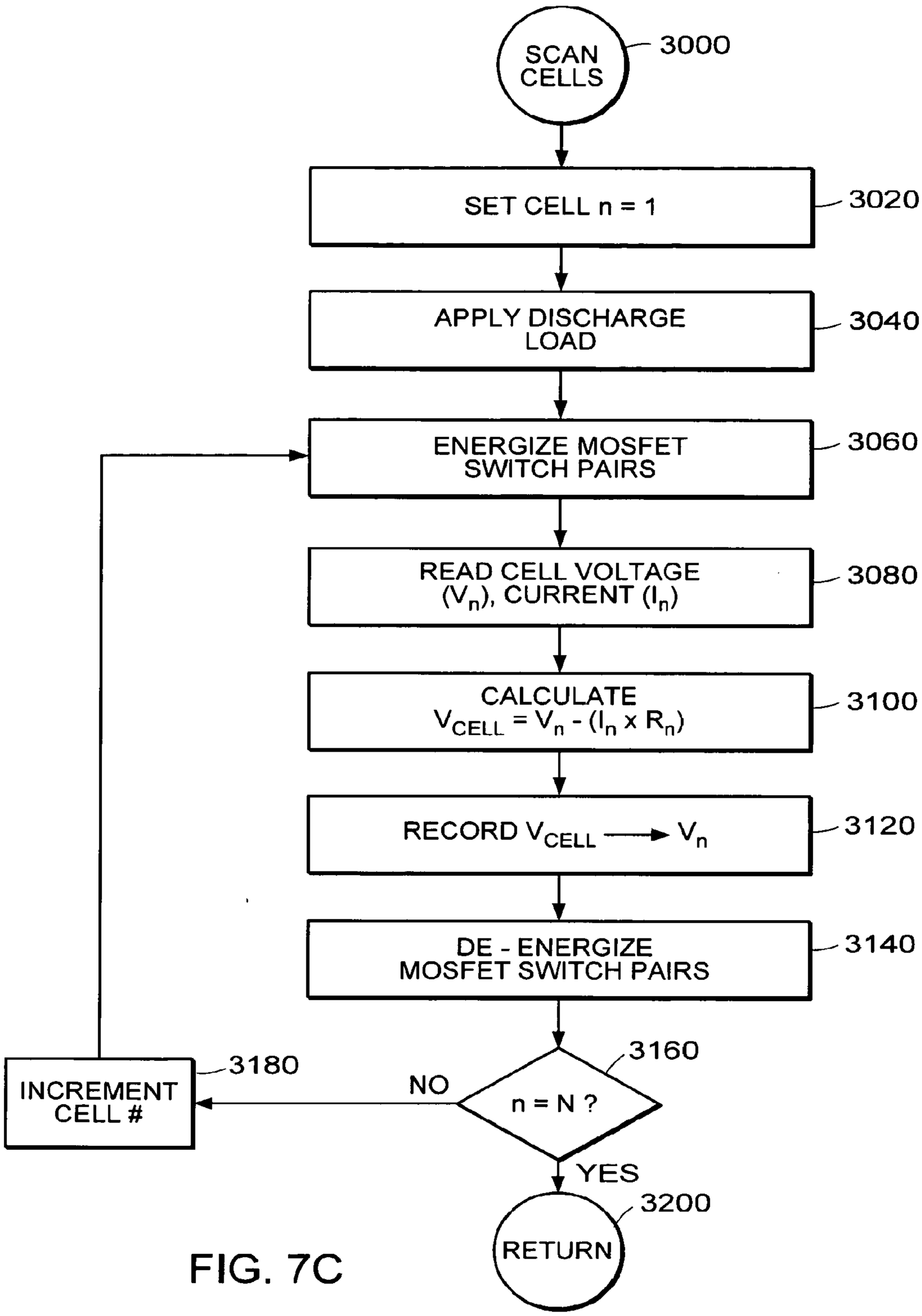
SCAN CELLS
3000
SET CELL n = 1
3020
APPLY DISCHARGE LOAD
3040
ENERGIZE MOSFET SWITCH PAIRS
3060
READ CELL VOLTAGE (V_n), CURRENT (I_n)
3080
CALCULATE $V_{CELL} = V_n - (I_n \times R_n)$
3100
RECORD $V_{CELL} \rightarrow V_n$
3120
DE - ENERGIZE MOSFET SWITCH PAIRS
3140
n = N ?
3160
NO
YES
INCREMENT CELL #
3180
RETURN
3200

FIG. 7C

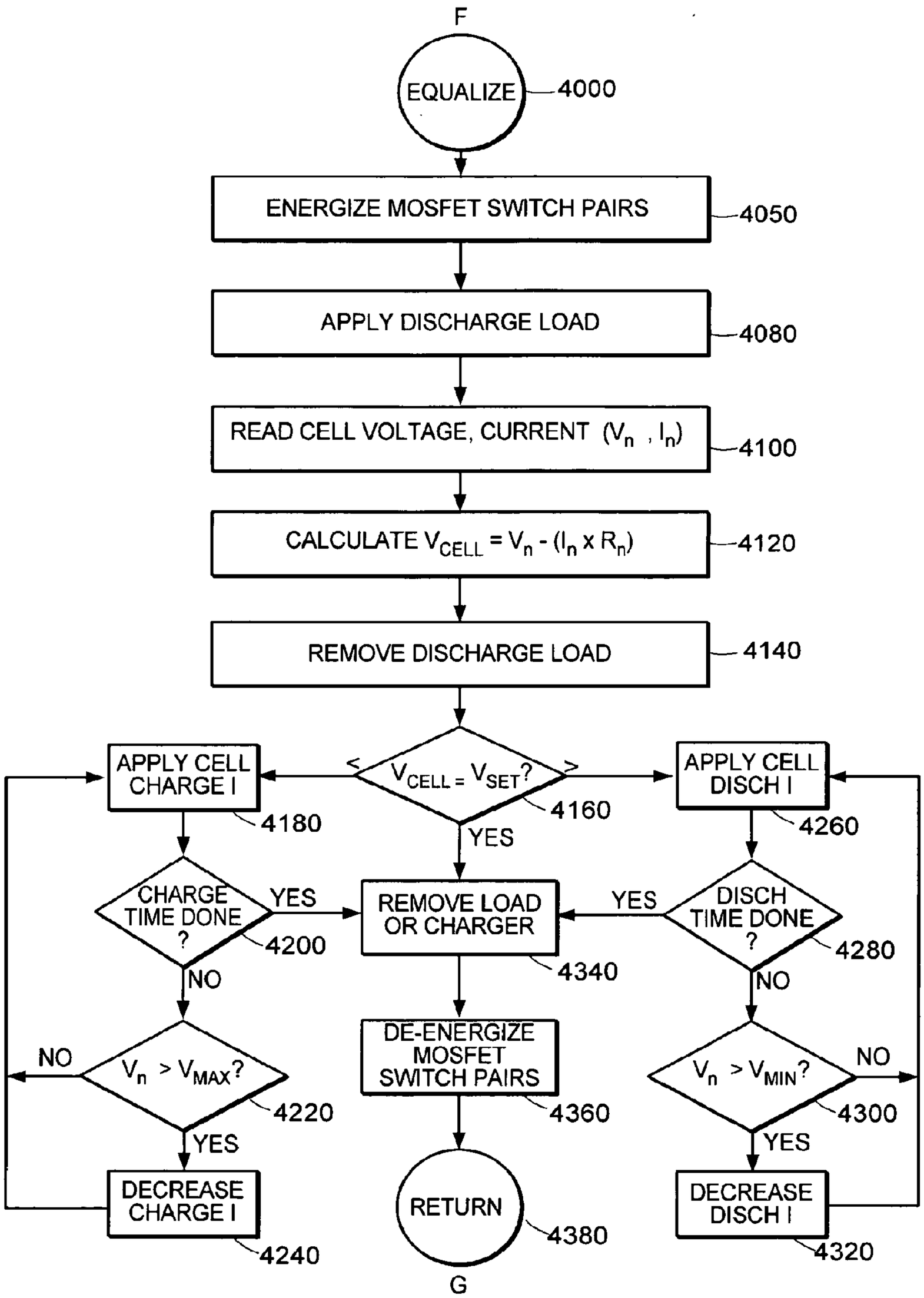
F
EQUALIZE
4000
ENERGIZE MOSFET SWITCH PAIRS
4050
APPLY DISCHARGE LOAD
4080
READ CELL VOLTAGE, CURRENT (V_n , I_n)
4100
CALCULATE $V_{CELL} = V_n - (I_n \times R_n)$
4120
REMOVE DISCHARGE LOAD
4140
APPLY CELL CHARGE I
4180
$V_{CELL} = V_{SET}$?
4160
APPLY CELL DISCH I
4260
YES
CHARGE TIME DONE ?
4200
YES
REMOVE LOAD OR CHARGER
4340
YES
DISCH TIME DONE ?
4280
NO
NO
$V_n > V_{MAX}$?
4220
DE-ENERGIZE MOSFET SWITCH PAIRS
4360
$V_n > V_{MIN}$?
4300
NO
YES
YES
DECREASE CHARGE I
4240
RETURN
4380
DECREASE DISCH I
4320
G

FIG. 7D

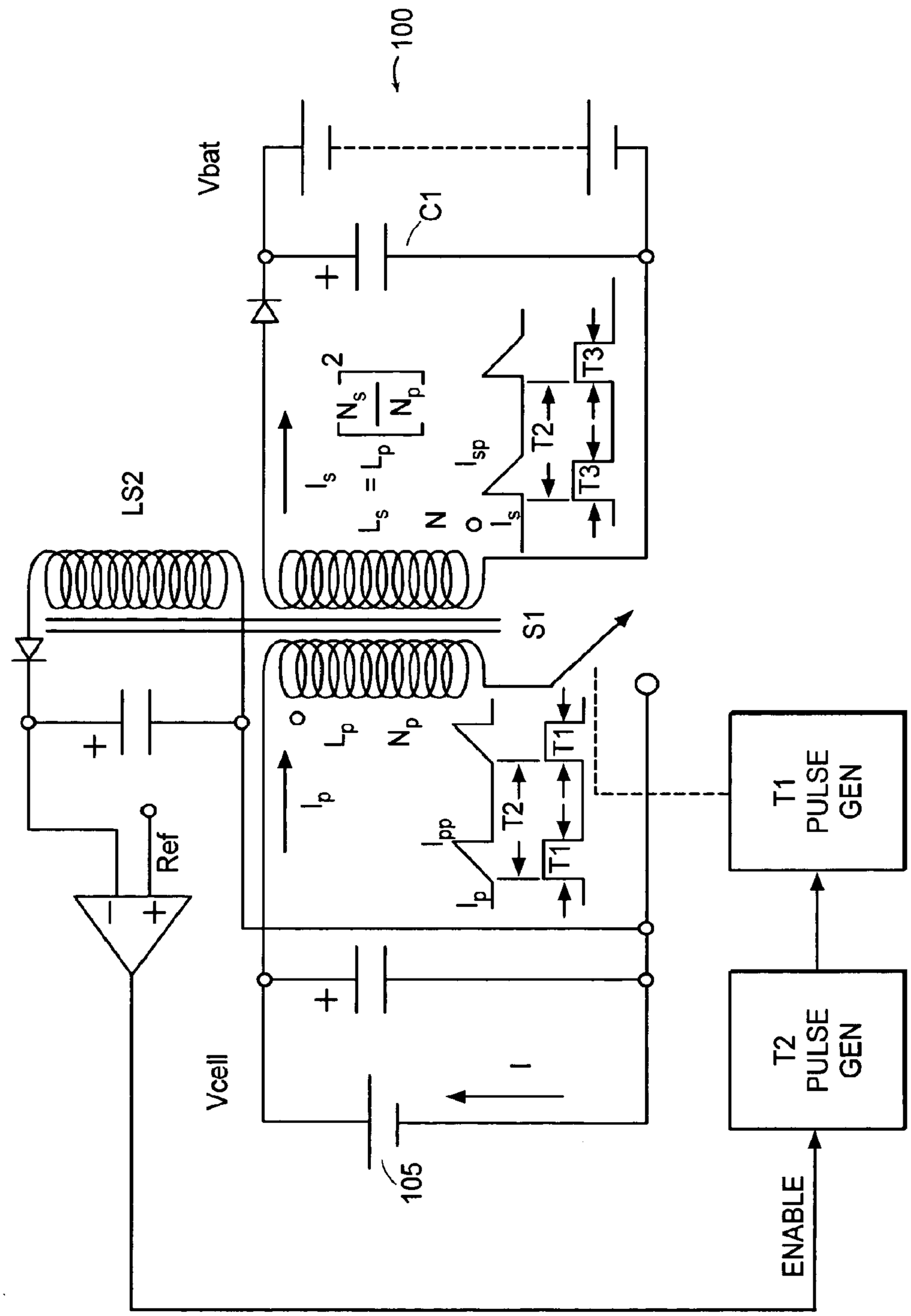
100
Vbat
C1
C
LS2
I_s
$L_s = L_p \left[\frac{N_s}{N_p}\right]^2$
L_s
N
O
I_s
I_{sp}
T2
T3
T3
S1
O
L_p
N_p
I_p
I_{pp}
T2
T1
T1
I_p
Ref
T1
PULSE
GEN
BOOST
Vcell
I
105
T2
PULSE
GEN
ENABLE

FIG. 8A

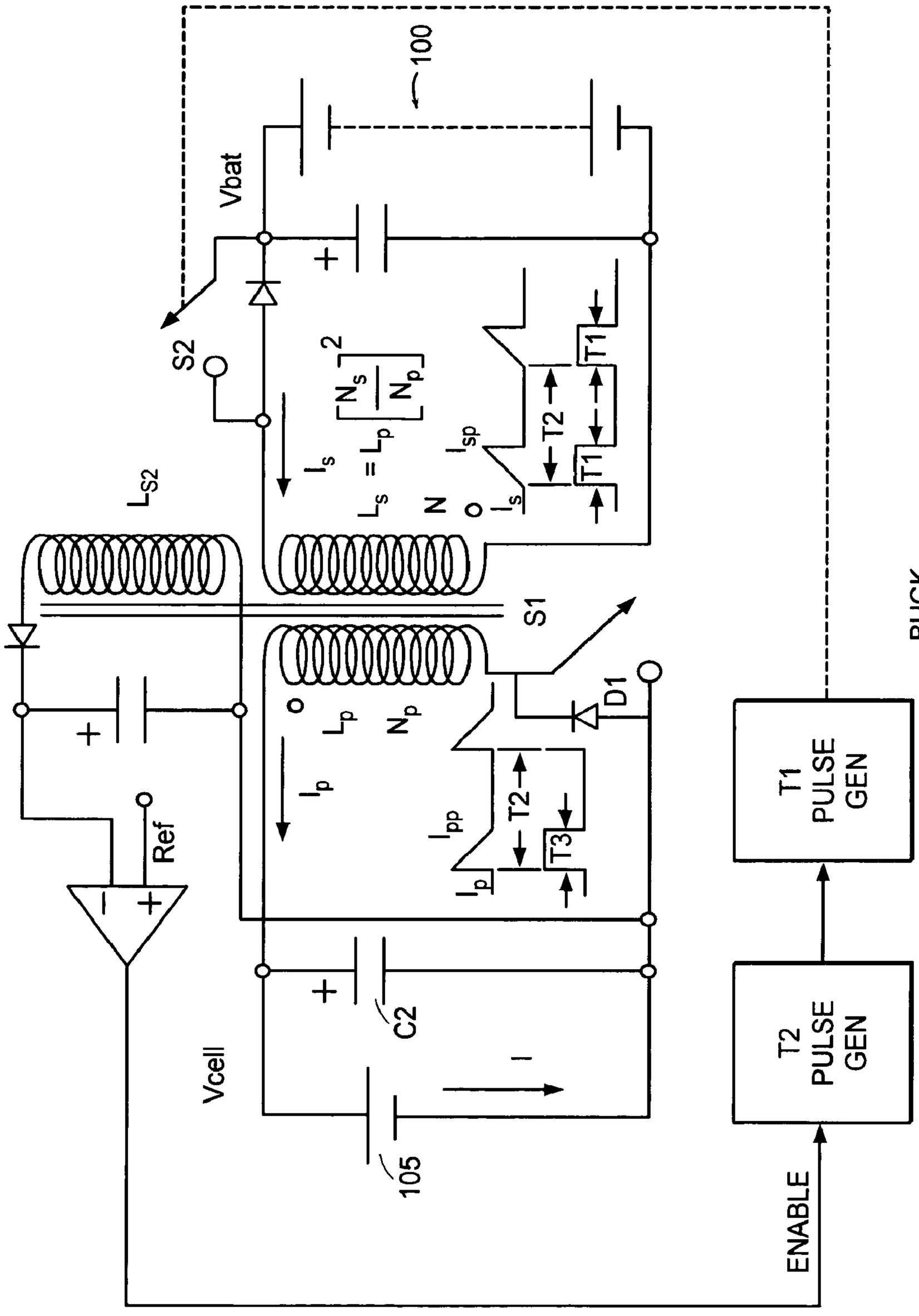
100
Vbat
S2
L_{S2}
I_s
$L_s = L_p \left[\frac{N_s}{N_p}\right]^2$
L_s
N
o
I_s
I_{sp}
T1
T2
T1
S1
D1
o
L_p
N_p
I_p
I_{pp}
T2
T3
I_p
Ref
C2
Vcell
105
I
T1 PULSE GEN
T2 PULSE GEN
BUCK
ENABLE

FIG. 8B

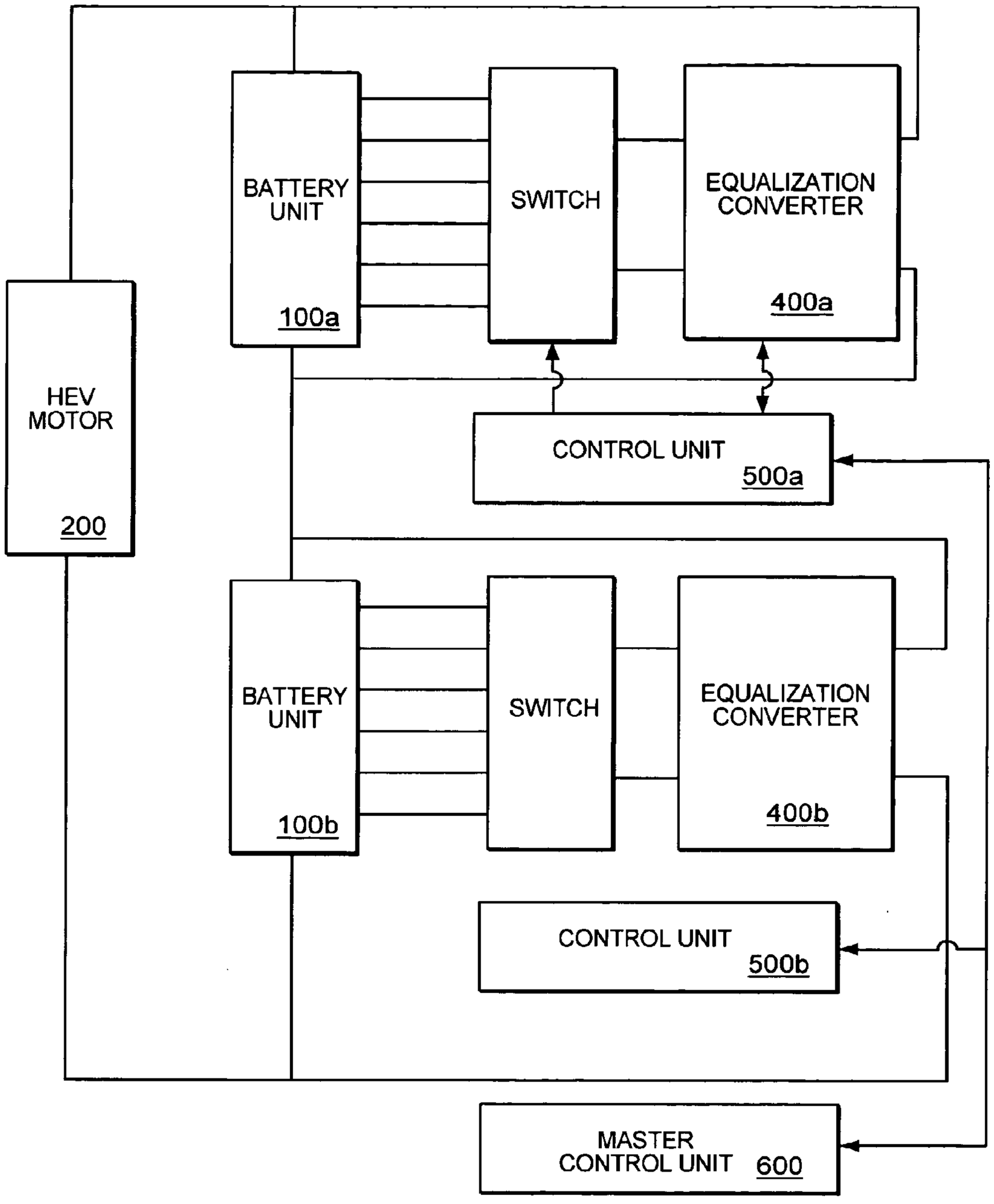
BATTERY UNIT
100a
SWITCH
EQUALIZATION CONVERTER
400a
HEV MOTOR
200
CONTROL UNIT
500a
BATTERY UNIT
100b
SWITCH
EQUALIZATION CONVERTER
400b
CONTROL UNIT
500b
MASTER CONTROL UNIT
600

FIG. 9

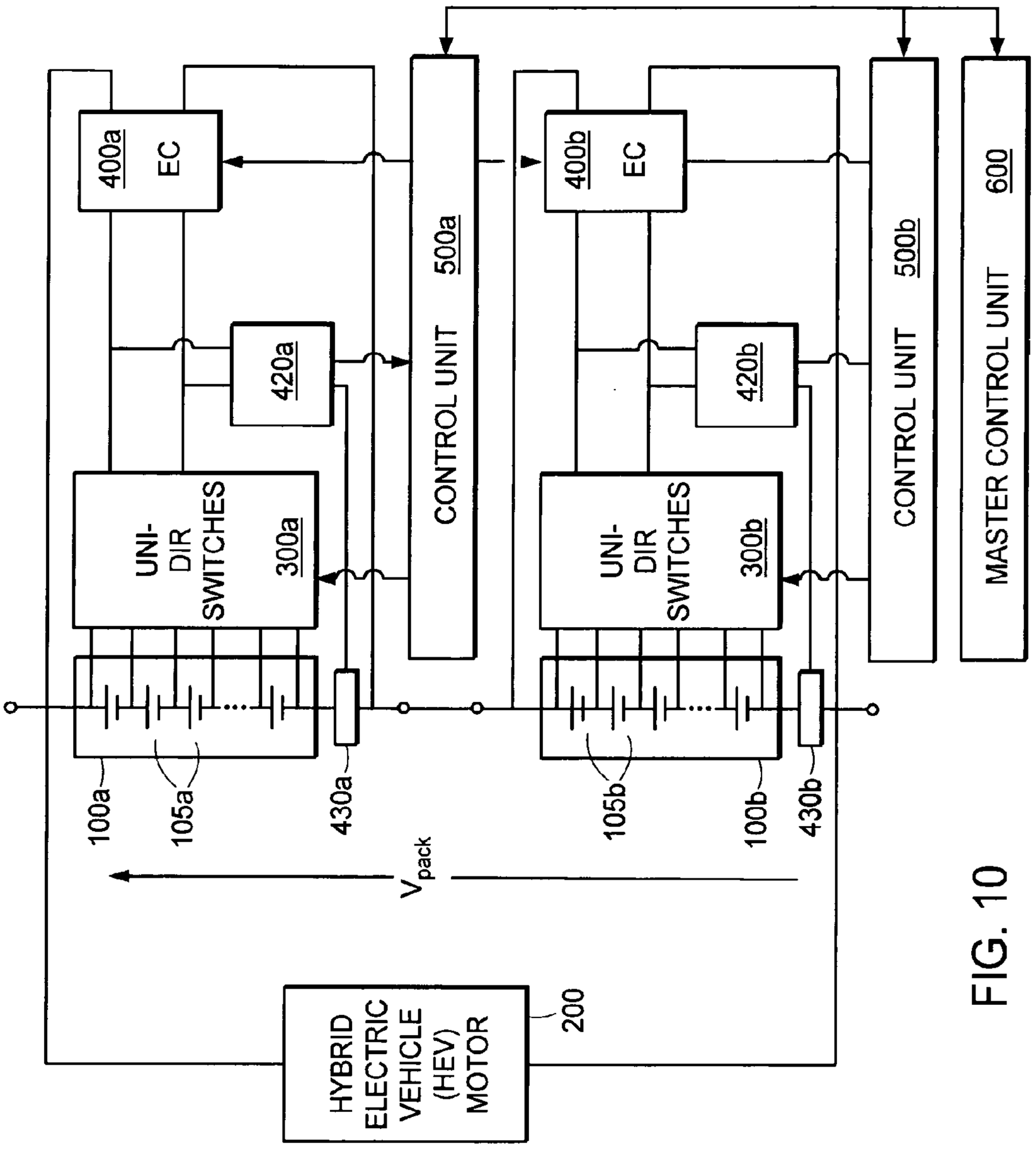
400a
EC
400b
EC
CONTROL UNIT 500a
CONTROL UNIT 500b
MASTER CONTROL UNIT 600
420a
420b
UNI-DIR SWITCHES 300a
UNI-DIR SWITCHES 300b
100a
105a
430a
105b
100b
430b
V_{pack}
HYBRID ELECTRIC VEHICLE (HEV) MOTOR
200

FIG. 10

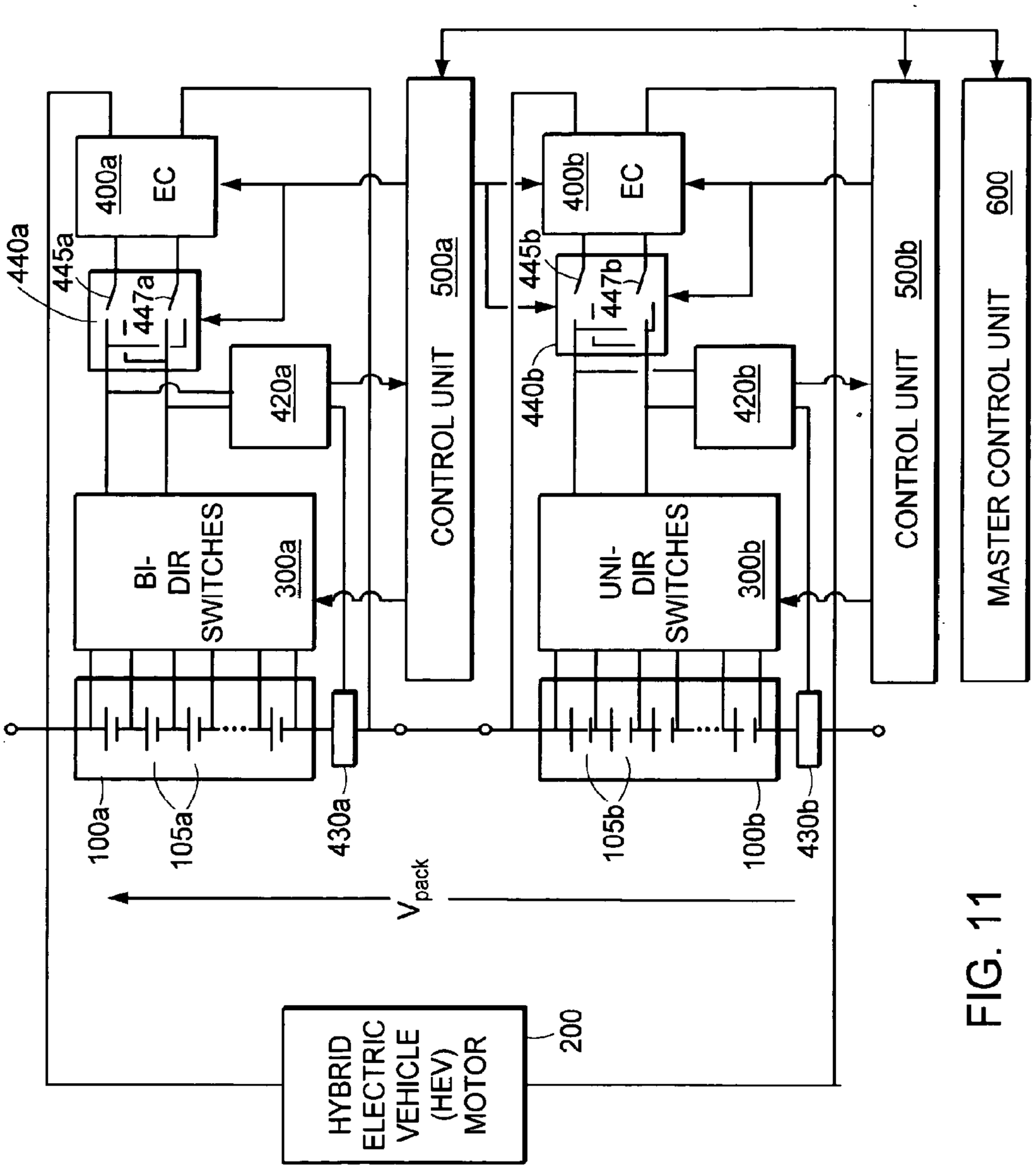
HYBRID ELECTRIC VEHICLE (HEV) MOTOR
200
V_{pack}
100a
105a
430a
BI-DIR SWITCHES
300a
420a
440a
445a
447a
400a
EC
CONTROL UNIT
500a
105b
100b
430b
UNI-DIR SWITCHES
300b
420b
440b
445b
447b
400b
EC
CONTROL UNIT
500b
MASTER CONTROL UNIT
600

FIG. 11

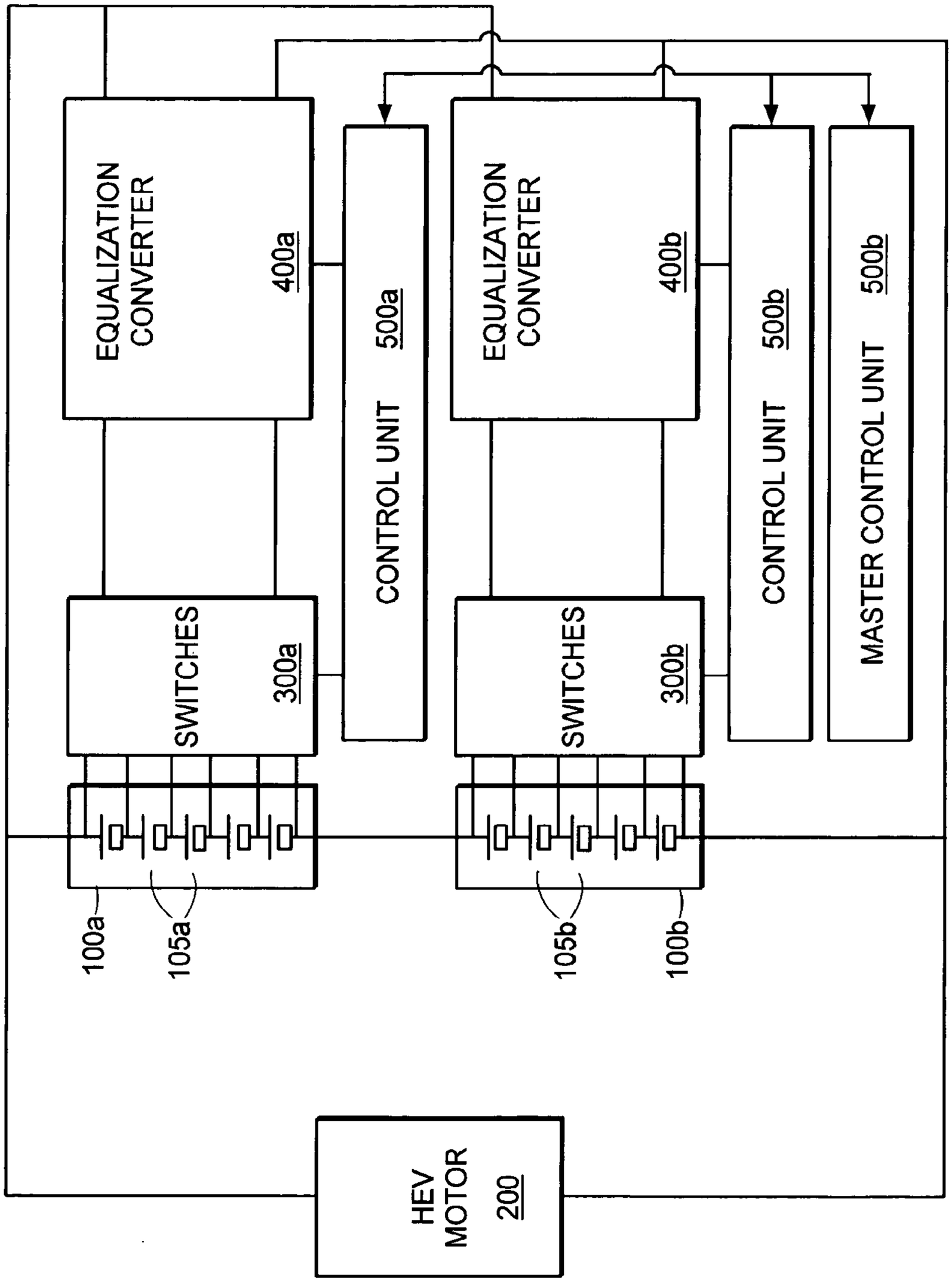
EQUALIZATION CONVERTER 400a
CONTROL UNIT 500a
SWITCHES 300a
EQUALIZATION CONVERTER 400b
CONTROL UNIT 500b
MASTER CONTROL UNIT 500b
SWITCHES 300b
100a
105a
105b
100b
HEV MOTOR 200

FIG. 12

BIDIRECTIONAL POWER CONVERTER FOR BALANCING STATE OF CHARGE AMONG SERIES CONNECTED ELECTRICAL ENERGY STORAGE UNITS

RELATED APPLICATIONS

[0001] This application claims the benefit of U.S. Provisional Application No. 60/464,391, filed Apr. 18, 2003 and U.S. Provisional Application No. 60/428,666, filed Nov. 25, 2002. The entire teachings of the above applications are incorporated herein by reference.

BACKGROUND OF THE INVENTION

[0002] Hybrid electric vehicles (HEVs) combine the internal combustion engine of a conventional vehicle with the battery and electric motor of an electric vehicle. This combination offers the driving range and rapid refueling features to which consumers are accustomed with conventional vehicles, while achieving improved fuel economy and lower emissions.

[0003] Typical HEV designs such as those already on the market and those which will be introduced shortly, are so-called "parallel" configurations. In the parallel HEV, the battery powered motor is principally used to boost engine torque for hill climbing and high acceleration demands. When boost torque is not required, the engine drives the electric motor as a generator to recharge the battery. The motor is also driven as a generator during braking events, thus, relieving thermal loading of the conventional friction brakes and enabling recovery of vehicle kinetic and potential energy which is returned to the battery.

[0004] The battery "pack" of a typical HEV consists of one or more "modules" of series-connected "cells." Nickel cadmium (NiCad) and nickel metal hydride (NiMH) cells have been successfully employed in recently introduced HEVs while higher performance lithium ion (Li-ion) cells are envisioned for future generation designs.

[0005] Desirable attributes of battery cells for HEV applications are high-peak specific power, high specific energy at pulse power, fast charge acceptance to maximize regenerative braking utilization, and long calendar and cycle life. Achieving a favorable HEV battery pack lifetime requires some means to monitor cell state of charge (SOC) and control of cell charging and discharging to assure that all cells in the pack are well "balanced" or "equalized," for example, at a nominally uniform state of charge. The development of means to achieve affordable and reliable balanced cell operation, especially for newer Li-ion cells, has presented significant technical challenges Lithium ion batteries are now widely used in laptop computer and cell-phone products because of their high specific energy. They also have high specific power, high energy efficiency, good high-temperature performance, and low self-discharge.

[0006] Components of lithium ion batteries could also be recycled. These characteristics make lithium ion batteries desirable for HEV applications. However, to make them commercially viable for HEVs, further development is needed to improve calendar and cycle life and cost.

SUMMARY OF THE INVENTION

[0007] If lithium-ion batteries are to be successfully employed in HEV applications, the state of charge of individual battery cells will need to be continuously balanced to maintain a high cell calendar life and cell capacity. Cells must have their state of charge equalized toward a target state of charge so they uniformly support HEV operation. Furthermore, care must be taken to assure that an individual cell is not charged beyond its safe limit. State of charge may be determined from an open circuit cell voltage measurement, or under load, from a measurement of cell voltage combined with cell impedance and current.

[0008] Despite the performance advantages of lithium-ion battery technology, there is a cost tradeoff associated with increased complexity of the controls required to equalize the battery state of charge. The achievement of an affordable solution is particularly challenging in the case of very long high voltage series strings of cells required for an HEV.

[0009] According to one aspect of the invention, a bidirectional power converter is provided for balancing state of charge among series connected electrical energy storage units. Cell chemistries other than lithium-ion, such as nickel-cadmium, lead-acid and nickel metal hydride, may also benefit from embodiments of the bi-directional power converter.

[0010] According to one embodiment, a system for balancing state of charge among plural series connected electrical energy storage units includes a power converter that selectively couples to an individual storage unit of the a string of electrical energy storage units and transfers energy bidirectionally between the individual storage unit and the string of storage units.

[0011] In particular embodiments, the power converter can transfer energy at a controllable rate of transfer. The power converter can monitor voltage and current data of the individual storage unit resulting from the transfer of energy. The power converter can transfer units of energy between the individual storage unit and the string of storage units.

[0012] In particular embodiments for transferring energy from the individual storage unit to the string of storage units, the power converter includes (i) a primary inductor; (ii) a first secondary inductor magnetically coupled to the primary inductor; and (iii) a first switch selectively coupling the individual storage unit to the primary inductor. The first secondary inductor further couples to an output capacitor that is coupled in parallel to the string of storage units. When the first switch is on, energy is transferred from the individual storage unit to charge the primary inductor. When the first switch is off, the energy is discharged into the first secondary inductor to charge the output capacitor, which discharges the energy to the string of storage units.

[0013] In particular embodiments, the system can include a first pulse generator that provides first enable signals to the first switch. The first switch couples the individual storage unit to the primary inductor in response to the first enable signals, resulting in energy being transferred from the individual storage unit to the string of storage units.

[0014] The system can also include a second pulse generator that provides second enable signals to the first pulse generator. The second enable signals control the transfer of energy from the individual storage unit to the string of storage units at a controllable rate with the first pulse generator providing first enable signals in response to the second enable signals.

[0015] In particular embodiments, the system can further include a second secondary inductor that is coupled to the individual storage unit with the second secondary inductor having a secondary voltage. A voltage comparator receives the secondary voltage and a reference voltage at its inputs.

When the secondary voltage is greater than the reference voltage, the second pulse generator is activated. When the secondary voltage reaches the references voltage, the second pulse generator is deactivated.

[0016] In particular embodiments for transferring energy from the string of units to the individual storage unit, the system can include (i) a primary inductor; (ii) a first secondary inductor magnetically coupled to the primary inductor; and (iii) a second switch selectively coupling the first secondary inductor to the string of storage units. When the second switch is on, energy is transferred from the string of storage units to charge the first secondary inductor. When the second switch is off, the energy is discharged into the primary inductor, charging the individual storage unit.

[0017] In particular embodiments, the system can include a first pulse generator that provides first enable signals to the second switch. The second switch couples the string of storage units to the first secondary inductor in response to the first enable signals, resulting in energy being transferred from the string of storage units to the individual storage unit.

[0018] The system can also include a second pulse generator that provides second enable signals to the first pulse generator. The second enable signals control the transfer of energy from the string of storage units to the individual storage unit at a controllable rate with the first pulse generator providing first enable signals in response to the second enable signals.

[0019] In particular embodiments, the system can further include a second secondary inductor that is coupled to the individual storage unit with the second secondary inductor having a secondary voltage. A voltage comparator receives the secondary voltage and a reference voltage at its inputs. When the secondary voltage is less than the reference voltage, the second pulse generator is activated. When the secondary voltage reaches the reference voltage, the second pulse generator is deactivated.

[0020] In particular embodiments, the power converter can include an up convertor for transferring energy from the individual storage unit to the string of storage units and a down convertor transferring energy from the string of storage units to the individual storage unit. In other particular embodiments, the power converter can include a common transformer that is used as a down convertor to charge the individual storage unit and as an up convertor to discharge the individual storage unit.

[0021] Each storage unit can be a storage cell or a battery module having a string of storage units. A string of one or more storage units can comprise a battery pack.

BRIEF DESCRIPTION OF THE DRAWINGS

[0022] The foregoing and other objects, features and advantages of the invention will be apparent from the following more particular description of preferred embodiments of the invention, as illustrated in the accompanying drawings in which like reference characters refer to the same parts throughout the different views. The drawings are not necessarily to scale, emphasis instead being placed upon illustrating the principles of the invention.

[0023] FIG. **1** is a diagram illustrating a cell balancing system according to one embodiment.

[0024] FIG. **2** is a more detailed diagram illustrating a cell balancing system according to one embodiment.

[0025] FIGS. **3**A and **3**B are conceptual diagrams for illustrating the bidirectional charging operation of the equalization converter according to one embodiment.

[0026] FIGS. **4**A and **4**B are schematic diagrams for illustrating the operation of the switch matrix having unidirectional switches.

[0027] FIG. **5** is a more detailed diagram illustrating a cell balancing system according to an alternative embodiment.

[0028] FIGS. **6**A and **6**B are schematic diagrams for illustrating the operation of the switch matrix having bidirectional switches according to one embodiment.

[0029] FIG. **7**A-**7**D are flow charts illustrating a method of operating the cell balancing system according to one embodiment.

[0030] FIG. **8**A is a schematic diagram illustrating the operation of a boost converter according to one embodiment.

[0031] FIG. **8**B is a schematic diagram illustrating the operation of a buck converter according to one embodiment.

[0032] FIG. **9** is a diagram of a cell balancing system having reduced switch blocking requirements according to one embodiment.

[0033] FIGS. **10** and **11** illustrate particular embodiments for reducing switch voltage blocking requirements utilizing the unidirectional and bidirectional switch matrix configurations respectively.

[0034] FIG. **12** is a diagram illustrating a cell balancing system according to an alternative embodiment.

DETAILED DESCRIPTION OF THE INVENTION

[0035] A description of preferred embodiments of the invention follows.

[0036] FIG. **1** is a diagram illustrating a cell balancing system according to one embodiment. The cell balancing system **1** includes a battery pack **100** that further includes a string of series-connected storage cells **105** for storing energy. The battery pack **100** serves as a source to power, for example, a Hybrid Electric Vehicle (HEV) motor **200**. The battery pack **100** may also receive charge from the HEV motor **200** when it is driven as a generator either by the HEV engine or by vehicle kinetic and potential energy during braking operations.

[0037] The battery pack **100** is further coupled to a switch matrix **300**, such that each of the storage cells **105** in the pack **100** may be individually selected and electrically coupled to an equalization converter **400** for monitoring of voltage, current, and temperature and for equalization of the individual cell state of charge toward a target state of charge. In particular embodiments, the switch matrix **300** may be an assembly of semiconductor switches, facilitating integrated circuit design and reduced fabrication costs.

[0038] A control unit **500** directs the switch matrix **300** in selectively coupling individual cells to the equalization converter **400** and monitors the state of charge of the individual cells **105** through communication with the equalization converter **400**. According to one embodiment, the control unit **500** is a micro-controller with on-chip analog-to-digital converter (ADC) of modest resolution (e.g., 10 bits) and a conversion rate of, for example, 1000 per second. When the state of charge of an individual cell is different than a target state of charge, the control unit **500** directs the equalization converter **400** to transfer energy between the individual cell and the string of cells **100**, such that the state of charge of the selected cell converges toward a target state of charge.

[0039] For example, when the state of charge of a selected cell is greater than the target, the cell is incrementally discharged by directing the equalization converter **400** to draw current from the cell and to return the charge back to the battery pack **100** via connection **401**. Conversely, when the state of charge of the selected cell is less than the target, the cell is charged by directing the equalization converter **400** to draw current from the battery pack **100** via connection **401** and to deliver it to the selected cell. State of charge may be determined from a voltage measurement under a fixed load using a method depicted in FIGS. **7**A-**7**D and subsequently described. In such embodiments, an individual cell may be charged or discharged in a non-dissipative manner.

[0040] According to alternative embodiments, the current drawn (i.e., discharged) from the selected cell may be transferred to another non-dissipative load. A load is non-dissipative if at least 80% of the energy through that element is conserved. A non-dissipative load can include an intermediate energy storage buffer (e.g., a capacitor or an auxiliary power supply) for subsequent charging of the string of cells or an individual cell. According to further alternative embodiments, the non-dissipative load may also include another storage cell. Additional switches and equalization converters may need to be incorporated for transferring energy to the other storage cell.

[0041] State of charge (SOC) is a measure that characterizes electrochemical states of a cell after a charging or discharging process. For example, assume that the full capacity of a cell is 'z' Ah (Ampere-hour). After discharging 0.5 z Ah capacity from the fully charged state, the state of charge of the cell is 50%. Likewise, after discharging 0.25 z Ah capacity from the fully charged state, the state of charge is 25%, and so on.

[0042] The state of charge of a cell can be correlated to cell open circuit voltages through electrochemical titration of the cell. As an approximation, a cell's state of charge is often correlated to cell voltages through charging or discharging voltage profiles at very low charging or discharging rates. Since cell state of charge reflect the electrochemical state, it is important to equalize a cell's state of charge in order to enhance cell life and cell safety.

[0043] According to particular embodiments of the invention, the state of charge is measured by measurement of voltage, current, and impedance. The state of charge is equalized by correcting for the voltage difference that is due to the load and then comparing voltages of individual cells.

[0044] In prior art techniques, charge is measured and used as an indicator of cell equalization. However, charge, which is measured in Ampere-hour (Ah), is quite different from state of charge (SOC). It is not sufficient to only measure charge in order to equalize cells, because cells having the same charge may not have the same state of charge.

[0045] For example, assume two cells have a capacity of 20 Ah. When the cells are charged to 20 Ah, both have a 4.2V potential. Assuming that full cell capacity can be utilized, the cells can be equalized to a state of charge of 50% by equalizing the charge of the cells to 10 Ah, resulting in a certain voltage less than 4.2V.

[0046] However, assume further that the two cells degrade differently, such that the first cell can only achieve a maximum capacity of 18 Ah and the second cell can only achieve a maximum capacity of 15 Ah in their respective degraded state. When both cells are charged to their maximum capacities, both have a voltage potential of 4.2V. In this case, if the two cells are equalized to an equilibrium charge of 10 Ah, the first cell would be discharged by 8 Ah and the second cell would be discharged by 5 Ah. This results in the cells having different states of charge (i.e., 56% and 67% respectively), and thus two quite different cell voltages. Hence the cells are not considered equalized.

[0047] Therefore, the method of equalizing cell charge does not become reliable for the degraded cells or for cells that are not equivalent in nature. This inability to equalize state of charge leads to low battery life and safety hazards. The low life is caused by potential deep discharge or overcharging, resulting from the inability to determine state of charge. Further, and especially for lithium-ion batteries, the overcharge or over-discharge may cause thermal runaway due to possible formation of dendrites that can cause internal shortage of the cells.

[0048] According to particular embodiments of the invention, the impedance of a cell, and therefore the state of charge, can preferably be measured by employing a test current coming from or into the cell and measuring the voltage in response. The cell resistance is determined by dividing the measured cell voltage by the measured cell current. Additional information about the more complex cell impedance can be determined by measuring the resistance change over time in response to a constant current or a current profile.

[0049] The test current can be a controlled current that can be programmed by the controller to take a current sample from or supply a current sample to the cell in a non-dissipative manner via the converter. The test current can also employ the actual load current going into or out of the string of cells as the vehicle brakes or accelerates.

[0050] In the case of the controlled current, the amplitude and duration of the current pulse can be tailored to optimize the impedance measurement. In the case of a load current due to vehicle motion, the measurement of impedance may not be optimized, but it can occur during normal vehicle operation.

[0051] Both types of test current impedance measurement may be combined if necessary. For example, if the vehicle is drawing only a light load from the stack that is not sufficient to accurately measure the impedance of a particular cell, the converter may be programmed to draw just enough extra current from the cell to provide an accurate measurement.

[0052] For batteries, when determining internal impedance of the cell, the voltage and current are preferably measured during a fast pulse of the system. This impedance is only due to the so-called internal impedance and not due to other polarization effects in the battery. This is also the impedance that is used to calculate the voltage that corresponds to a certain state of charge, by correcting for the load applied to the battery during operation.

[0053] FIG. **2** is a more detailed diagram illustrating a cell balancing system according to one embodiment. In this embodiment the switch matrix **300** includes an assembly of 2(N+1) unidirectional switches (not shown) where N is the number of cells in the battery pack **100**. In order to electronically couple an individual cell to, for example, the equalization converter **400**, the control unit **500** energizes a pair of unidirectional switches that provides a conduction path between the converter **400** and an individual cell **105**. In particular, a first selected pair of switches provides a conduction path for charging the cell and a second selected pair of switches provides a conduction path for monitoring and dis-

charging the cell. Implementation of switch matrix **300** with unidirectional switches is depicted in FIGS. **4**A and **4**B and subsequently described.

[0054] The equalization convertor **400** is used to transfer energy between an individual cell and the string of cells **100** when the state of charge for the selected cell is different than the target state of change. The control unit **500** provides control signals directing the converter **400** to transfer energy into a selected cell from the string of cells **100** or to transfer energy out of the cell back into the string of cells **100**. The control unit **500** also provides control signals for limiting current to and from the cell and for identifying a target state of charge (e.g., cell voltage).

[0055] The equalization converter **400** includes a buck converter **412**, also referred to as a down converter. When the state of charge of an individual cell is less than a target state of charge, the control unit **500** directs the buck converter **412** to transfer energy from the string of cells to charge the individual cell.

[0056] According to one embodiment, the buck converter **412** may be a galvanically isolated buck converter circuit, which can accept charge from a pack of series-connected cells or a battery module of cells (e.g., a 400-volt battery pack of five 80-volt modules) and deliver it to a selected cell. The buck converter input voltage range can be matched to the maximum voltage produced by a string of cells in a battery module (e.g., 80 volts) or the entire battery pack itself (e.g., 400 volts). The buck converter output can be matched to the voltage of an individual cell. The converter output may also have its voltage and current limits programmable by the control unit **500**.

[0057] The buck converter power rating may be determined by the maximum equalization charge current demand. For example, the peak power rating of a buck converter providing a maximum equalization charge current of 10 Amperes delivered at 4 Volts is 40 Watts, resulting in the size and cost of the circuit components being relatively small. The buck converter may also supply a small amount of control power necessary to operate cell monitoring and equalization control circuits.

[0058] In one particular embodiment, the buck converter is a Beta Dyne 40 W Power Watt™ DC/DC Converter. In another particular embodiment, the buck converter is implemented as a combined buck/boost converter, which can be enabled to perform either function. A boost converter returns charge to the pack. The operation of a buck converter according to one embodiment is illustrated in FIG. **8**B.

[0059] The equalization converter **400** further includes a boost equalization converter **414**, also referred to as an up converter. When the state of charge of the individual cell is higher than the target state of charge, the control unit **500** directs the boost converter **414** to transfer energy from the selected cell to charge the string of cells **100**.

[0060] According to one embodiment, the boost converter **414** may be a galvanically isolated boost converter circuit which can accept charge from a selected cell and return it to a pack of cells or a module of cells (e.g., a 400 volt battery pack employing five 80-volt modules). Its output provides a current source with adequate voltage to assure charge acceptance at the maximum desired rate over the operating voltage range of the pack or module to which it is connected.

[0061] The boost converter may have its output voltage limited to avoid over-voltage when disconnected. The boost converter may have its input voltage and current limits determined by the control unit **500**. For example, the input may be configured to accept charge from the connected cell over the expected range of cell voltages. The size and cost of the circuit components of the boost converter may be similar to the buck converter. The operation of a boost converter according to one embodiment is illustrated in FIG. **8**A.

[0062] The cell balancing system further includes a cell voltage and current monitor **420**, and a current sensor **430**. The cell voltage and current monitor **420** reports selected cell voltage and current to the control unit **500** for determining the state of charge of that cell. The cell voltage and current monitor **420** also observes battery current sensor **430**. Cell voltage and current data is utilized by the control unit **500** for determining a target state of charge dynamically. When each of the individual states of charge of the cells converges toward the target state of charge, the charge will be equalized across the string of cells, facilitating longer operating and calendar life.

[0063] FIGS. **3**A and **3**B are conceptual diagrams for illustrating the bidirectional charging operation of the equalization converter according to one embodiment. At this conceptual level, attention is focused on the galvanic isolation provided by transformer coupling means (a,b) employed in the buck converter **412** and boost converter **414**. Switch mode power supply circuitry required to interface the DC input and DC outputs with the transformer is assumed but not shown.

[0064] In FIG. **3**A, when the buck converter **412** is directed by the control unit **500** to transfer energy into selected cell V**3**, current from the string of cells **100** is drawn through an inductor element "b," causing induced current to be driven from the buck converter **412** into selected cell V**3** via inductor element "a." For example, in FIG. **3**A, where there are 5 storage cells in the string, the voltage across the string of cells must be down converted to about the target voltage of the individual cell, or about ⅕ the string voltage. Assuming all cells have about the same impedance and 1 A of induced current is driven into the selected cell from the buck converter **412**, about ⅕ A will be drawn from the string. The resultant current through the cell being charged will then be approximately (1 A−⅕ A)=⅘ A of current for charging the selected cell, while ⅕ A of current is discharged from the remaining cells.

[0065] Conversely, in FIG. **3**B, when the boost converter **414** is directed by the control unit **500** to transfer energy out of the selected cell V**3**, current from the selected cell is drawn through an inductor element "a," causing induced current to be driven from the boost converter **414** back into the string of cells **100** via inductor element "b." For example, in FIG. **3**B, where there are 5 storage cells in the string and 1 A of induced current is drawn from the selected cell by the equalization discharge converter **414**, ⅘A of current (i.e., 1 A−⅕ A=⅘ A) is discharged from the selected cell, while ⅕ A of current is delivered to the remaining cells for charging.

[0066] FIGS. **4**A and **4**B are schematic diagrams for illustrating the operation of the switch matrix having unidirectional switches. The operation of the switch matrix permits a cell to be selectively charged or discharged and its voltage to be monitored. For embodiments of the cell balancing system, such as illustrated in FIG. **2**, an assembly of N cells requires 2(N+1) independently controlled unidirectional switches S.

[0067] Although not so limited, in the illustrated embodiment the unidirectional switches are MOSFET switches S with each coupled to a blocking diode D. The unidirectional switches are arranged such that by energizing a pair of switches, a conduction path through the selected cell is main-

tained for monitoring and/or transferring energy in or out of the cell. Since switches S are unidirectional, one pair of switches may be enabled to selectively charge an individual cell and another pair of switches may be enabled to discharge or monitor the same cell.

[0068] For example, in FIG. **4**A, it is possible to selectively charge an individual cell V**1** by enabling unidirectional MOSFET switches S**9** and S**12**. Current taken from a battery of cells via the buck converter **412**, which is represented by controlled current source **12**, flows from switch S**9** and diode D**9** through cell V**1** and returns back to the switch matrix **300** by switch S**12** and diode D**12**. In this example, blocking diodes D**10** and D**11** prevent cell V**1** from being short circuited through the intrinsic body diodes of S**10** and S**11** while S**9** and S**12** are conducting. For example, the intrinsic body diode bd**7** of switch S**7** is shown in FIG. **4**A. That diode allows conduction from right to left even when switch S**7** is gated OFF. Such conduction would provide a short circuit from the positive node of V**2**, through the intrinsic body diode of S**7** and the ON switch S**9** if the diode D**7** were not in place.

[0069] Similarly, in FIG. **4**B, it is possible to discharge an individual cell V**1** by enabling unidirectional MOSFET switches S**11** and S**10**. Charge returning to the battery of cells via the boost converter **414**, which is represented by a controlled current sink **11**, flows from switch S**11** and diode D**11** through cell V**1** and returns back to the switch matrix **300** by switch S**10** and diode D**10**. Alternatively, II may be a current limited voltage sink (i.e. one which permits cell discharge to a controllable potential).

[0070] As noted above, a diode in series with each unidirectional MOSFET switch is required to block undesired conduction paths. To provide minimal voltage drop across the blocking diodes, Shottky diodes may be used. Because the associated current is known, it is possible to compensate for the blocking voltage drop in charge, discharge, and measurement modes of operation. The residual non-systematic voltage drop after compensation is due to variations in diode properties among devices and cannot be compensated, but it is small relative to the operating voltages. This combined charge/discharge capability with a single controlled matrix provides the ability to transfer charge selectively among cells to provide for cell balancing.

[0071] According to particular embodiments, the unidirectional switches may also be insulated gate bipolar transistors (IGBT). However, MOSFET technology avoids the conduction loss associated with the IGBT saturation voltage drop (Vce sat). MOSFET switches provide low impedance when turned ON. In particular, the losses due to drop across the MOSFET "on-resistance" (RDS on) are relatively small and there is low MOSFET "on-resistance" variation among devices and with temperature variation, providing an acceptable level of error in all voltage measurements through the matrix.

[0072] Isolated gate drives of the MOSFET switches may facilitate implementation in the form of an application specific integrated circuit (ASIC). According to one embodiment, the gate drivers are galvanically isolated light emitting diode (LED) driven photovoltaic (PV) gate drivers. The modest turn-ON/turn-OFF speeds achieved by these drivers are more than adequate for the intended application.

[0073] FIG. **5** is a more detailed diagram illustrating a cell balancing system according to an alternative embodiment. This embodiment is substantially similar in operation to that of FIG. **2** with the exception of the configuration and operation of switch matrix **300** and the additional polarity selector **440** that is controlled by control unit **500**. The polarity selector **440** is coupled between the switch matrix **300** and the equalization converter **400**.

[0074] In particular, the switch matrix **300** includes a bank of N+1 bidirectional switches (not shown) where N is the number of cells in the battery pack **100**. In order to electronically couple an individual cell to, for example, the equalization converter **400**, the control unit **500** energizes a pair of bidirectional switches that provides a conduction path between the converter **400** and the cell. One pair of switches may be used to selectively charge or discharge an individual cell.

[0075] The control unit **500** determines whether to charge or discharge the cell based on whether the state of charge of the selected cell is greater or less than a target state of charge. When the state of charge is greater, the control unit **500** sends a signal to the equalization converter **400** to discharge the cell. At the same time, the control unit **500** also sends a control message to the polarity selector **440** to select the polarity of links **445** and **447** which are coupled to the switch matrix **300**, as discussed in FIG. **6**A. The polarity selector may be implemented with MOSFET switches and galvanically isolated LED-PV gate drivers or electromechanical relays. Other implementations of the polarity selector known to those skilled in the art may suffice.

[0076] FIGS. **6**A and **6**B are schematic diagrams for illustrating the operation of the switch matrix having bidirectional switches according to one embodiment. The operation of the switch matrix permits a cell to be selectively charged or discharged and its voltage to be monitored. Note that for this embodiment, a pair of unidirectional MOSFETs connected "back-to-back" comprises a single bidirectional switch. This will be explained in detail in FIG. **6**B.

[0077] For embodiments of the cell balancing system, such as illustrated in FIG. **5**, an assembly of N cells requires (N+1) independently controlled bidirectional switches. Thus, the number of switching components is reduced from implementations that utilize unidirectional switches. This reduction also corresponds to a reduction in the number of gate drivers that are required. The bidirectional switches are arranged such that by energizing a pair of switches, a conduction path through the selected cell is maintained for monitoring and/or transferring energy in or out of the cell.

[0078] Since switches are bidirectional, a single pair of switches may be enabled to both charge or discharge an individual cell. For example, in FIG. **6**A it is possible to selectively charge cell V**5** by enabling switch M**1**/M**2** and switch M**3**/M**4**. To charge the cell, the equalization converter **400** causes current to flow in a direction from switch M**1**/M**2**, charging cell V**5** and exiting through switch M**3**/M**4** back to the cell balancing circuitry. In particular, the internal resistance of the equalization circuit **400** is represented by a resistor and the string of cells **100** is represented by a battery symbol.

[0079] Similarly, in order to selectively charge cell V**4**, switches M**5**/M**6** and M**3**/M**4** must be enabled. However, in order to drive current from the equalization converter **400** into cell V**4** for charging, the polarity across the pair of switches must be reversed. The polarity is set by the control unit **500** sending control signals to the polarity selector **440** to set the polarity across links **445** and **447**. The selection of polarity is based, for example, on the particular arrangement of the bidirectional switches coupling to the individual cells. Other

arrangements of bidirectional switches may be implemented avoiding the need for the polarity selector.

[0080] It is also possible to selectively discharge cell V**5** by enabling the same bidirectional switches M**1**/M**2** and M**3**/M**4** that were enabled to charge the cell. To discharge the cell, the equalization converter **400** causes current to flow in an opposite direction from M**3**/M**4**, discharging cell V**5**, and exiting through switch M**1**/M**2** back to the cell balancing circuitry. The same polarity set for charging may be used for discharging.

[0081] However, in order to selectively discharge cell V**4**, switches M**5**/M**6** and M**3**/M**4** are enabled and the polarity across the pair of switches must be reversed. Thus, the equalization converter **400** is able to withdraw current from cell V**4**, such that current flows from switch M**5**/M**6**, discharging cell V**4** and exiting through switch M**3**/M**4** back to the cell balancing circuitry.

[0082] FIG. **6**B is a schematic diagram of a bidirectional switch according to one embodiment. In this embodiment, the bidirectional switch **305** is a pair of discrete MOSFET switches (M**1**, M**2**) having a common gate **305***g* and source **305***s*. To turn on the bidirectional switch, a voltage is applied to the gate **305***g*. According to one embodiment, the gate is driven by galvanically isolated LED photovoltaic (PV) gate drivers. Current flows in a direction determined by the equalization converter **400** and the polarity applied at terminals d**1** and d**2** as applied by links **445** and **447** of the polarity selector **440**.

[0083] With this configuration, a forward biased intrinsic body diode, bd**1** or bd**2**, does not introduce a voltage drop to compromise cell voltage measurement accuracy because current flows principally through the channel of the associated MOSFET device and the voltage drop across its channel resistance is much lower than a diode drop, and thus dominant. Moreover, when the bidirectional switch gate drive is off (i.e., zero or close to zero volts), the MOSFET switch pair blocks conduction in both directions thus avoiding need for the blocking diodes required for the unidirectional switch embodiment depicted in FIG. **4**A and FIG. **4**B. Thus, the illustrated embodiment of the switch provides low voltage drop switching with lower power dissipation and high accuracy in cell voltage and state of charge estimation, due to lower contaminating voltage drops in the circuit.

[0084] According to particular embodiments, the bidirectional switches may be implemented with insulated gate bipolar transistor (IGBT) devices or electromechanical relays, or Semiconductor Assisted Relay Switches. IGBT switches do not have an intrinsic reverse diode and provide only unidirectional conduction. Hence, if parallel "back-to-back" IGBT switches are utilized to implement the bidirectional switch previously described, each IGBT switch must contain series blocking diodes to prevent reverse current.

[0085] While bidirectional IGBT switches are applied in power switching applications, the conducting IGBT and reverse diode introduce contaminating voltage drops which are highly undesired here. MOSFET switches provide low impedance when turned ON, and thus are generally preferred for this reason. However, where voltage and current rating requirements cannot be affordably met by MOSFET switches, IGBT embodiments may be viable provided that compensation for the IGBT and diode conduction voltage drops is provided.

[0086] If electromechanical relays can attain suitable cycle life and their size and weight are not objectionable, they too may be employed for implementing the cell selection switch matrix in lieu of MOSFET bidirectional switches, with the advantage of avoiding the need for LED-PV drive isolation and virtual elimination of conduction losses. According to still further embodiments, the bidirectional switches may also be implemented with parallel-connected "back-to-back" silicon controlled rectifiers (SCRs).

[0087] Isolated gate drives of the MOSFET switches and the MOSFET switches themselves may facilitate implementation in the form of an application specific integrated circuit (ASIC). Moreover, more than one isolated gate drive bidirectional switch might be advantageously integrated in one ASIC chip. According to one embodiment, the gate drivers are galvanically isolated LED driven photovoltaic (PV) gate drivers. The modest turn ON, turn OFF speeds are more than adequate for the intended application.

[0088] FIG. **7**A-**7**D are flow charts illustrating a method of operating the cell balancing system according to one embodiment. Although not so limited, this method may be implemented as an algorithm that causes the control unit **500** to perform the following procedure. Referring to FIG. **7**A, the process starts at **1000**. At **1020**, the status of the motor is checked. If the motor is off, the method returns to **1000** and waits to poll the motor status again. If the motor is started, a cell number n is initialized to 1 at **1040** to select the first cell of the battery pack **100**. At **1060**, the process calls subroutine "READ IMPEDANCE."

[0089] Referring to FIG. **7**B at **2000**, subroutine "READ IMPEDANCE" is started. At **2020** a pair of switches is energized, connecting the selected cell (i.e., cell n=1). At **2040**, the open circuit voltage (Vopen) of the selected cell is read. At **2060**, a load is applied to the selected cell, causing current to flow from the selected cell and the cell voltage to drop. The applied load may be the boost converter **414**. By using the boost converter **414**, energy from the cell is not lost, as compared with a dissipative load. Rather, the boost converter **414** recharges the battery **100** with the current discharged from the cell.

[0090] At **2080** the loaded voltage (Vload) and current (Icell) of the selected cell are read. At **2100** the impedance of the selected cell is calculated and stored in variable Rn**2**. The cell impedance Rn**2** is calculated as a ratio of the voltage difference between the loaded voltage (Vload) and the open circuit voltage (Vopen) divided by the cell current (Icell). The previously saved cell impedance value is stored in variable Rn**1**.

[0091] Since cell impedance can vary due to the dynamic usage of the battery pack, the steps **2060** and **2080** may be repeated multiple times in order to obtain a more accurate determination of cell impedance. For example, according to one embodiment, the boost converter may be operated such that constant amplitude current pulses (i.e., DC pulses) are withdrawn from the cell at fixed or varied time intervals, as discussed in reference to FIG. **8**A. Whenever a DC pulse is drawn from the cell, the loaded voltage may be measured, resulting in a number of loaded voltage measurements. Whenever a DC pulse is not being drawn from the cell, the open circuit voltage across the cell may be measured, resulting in a corresponding number of open circuit voltage measurements. The voltage difference between the open circuit voltage and the voltage under load is referred to as a voltage ripple. From the voltage ripples and corresponding current pulses obtained over a period of time, a more accurate cell

impedance may be inferred. The resulting cell impedance value may then be stored in variable Rn**2**.

[0092] According to a further embodiment, the applied load may be a buck converter operated such that constant amplitude current pulses (i.e., DC pulses) can be inserted into the cell at fixed or varied time intervals to infer cell impedance in a similar manner.

[0093] At **2120** the applied load is removed. At **2140** the change in cell impedance (ΔR) between the present and previous cell impedance values (Rn**2**, Rn**1**) is calculated. At **2160** it is determined whether the present value Rn**2** has changed by 50% or more from the previous value Rn**1**. If so, a RETRY command is issued at **2180** causing the process to loop back to **2040** to recalculate the present cell impedance Rn**2**. If not, the previous impedance value Rn**1** is replaced with the present value Rn**2** at **2200**. At **2220** the selected pair of switches is de-energized, decoupling the selected cell from the cell balancing circuitry. At **2240**, subroutine "READ IMPEDANCE" returns.

[0094] Referring back to FIG. **7**A at **1080**, the cell number 'n' is compared with the total number of cells N in the pack to determine whether all of the present cell impedances have been determined. If not, the cell number 'n' is incremented at **1100** and subroutine "READ IMPEDANCE" is repeated until all of the present cell impedances R**1**, . . . RN have been determined.

[0095] At **1120** the sum of the present cell impedance values ΣR is calculated. At **1140** the pack voltage, Vp, and pack current, Ip are read. The pack current is measured by current sensor **430** and saved. At **1160** a setpoint voltage Vset is calculated by averaging the pack voltage Vp, offset by the product of the pack current Ip and the sum of the cell impedances ER, over the total number of cells N. In particular, the pack current Ip has a positive value when pack current enters the pack. Conversely, the pack current Ip has a negative value when pack current exits the pack. The set point voltage Vset is referred to as the target state of charge. At **1180**, subroutine "SCAN CELLS" is called.

[0096] Referring to FIG. **7**C, at **3000** subroutine "SCAN CELLS" is started. At **3020** the cell number 'n' is initialized to 1 to select the first cell in the pack. At **3040**, a load is applied to the circuit. The applied load may be the boost converter **414**. At **3060** a pair of switches is energized, connecting the selected cell to boost converter **414**. Current flows from the selected cell and the cell voltage drops. At **3080** the loaded voltage Vn and cell current In are read. At **3100** the state of charge of the selected cell is calculated. According to one embodiment, the state of charge Vcell is the difference between the loaded voltage Vn and the product of the cell current In and the present cell impedance Rn. In particular, where the applied load (e.g., boost converter) draws current out of the cell, the cell current In has a negative value. Conversely, where the applied load (e.g., buck converter) draws current into the cell, the cell current In has a positive value. At **3120**, the state of charge Vcell is stored in variable Vn.

[0097] At **3140** the selected pair of switches is de-energized, decoupling the selected cell from the boost converter **414**. At **3160** the cell number 'n' is compared with the total number of cells N in the pack to determine whether the state of charge Vcell has been calculated for each cell in the pack. If not, the cell number 'n' is incremented at **3180** and a next pair of switches is energized to electrically couple the next selected cell. This is repeated until all the individual cells have been analyzed. At **3200**, subroutine "SCAN CELLS" returns.

[0098] Referring back to FIG. **7**A, at **1200** the individual cells are prioritized for equalization based on the difference between their state of charge Vcell and the target state of charge Vset. According to one embodiment, the individual cells are sorted for equalization with the individual cell having the largest difference being selected first. Additionally, the amounts of time for charging a cell or returning charge to the pack may be proportioned according to the amount of this difference. According to another embodiment, the individual cells are accessed sequentially for equalization. At **1220** subroutine "EQUALIZE" is called.

[0099] Referring to FIG. **7**D, at **4000** subroutine "EQUALIZE" is started. At **4060** a pair of switches is energized, connecting the selected cell with the highest priority. At **4080** a load is applied to the selected cell, causing current to flow from the selected cell and the cell voltage to drop. The applied load may be the boost converter **414**. At **4000** the loaded cell voltage Vn and cell current In are read. At **4120** the state of charge Vcell of the selected cell is calculated. According to one embodiment, the state of charge Vcell is the difference between the loaded voltage Vn and the product of the cell current In and the present cell impedance Rn. In particular, where the applied load (e.g., boost converter) draws current out of the cell, the cell current In has a negative value. Conversely, where the applied load (e.g., buck converter) draws current into the cell, the cell current In has a positive value. After calculating the state of charge Vcell, the applied load is removed at **4140**. At **4160** the state of charge Vcell of the selected cell is compared with the target state of charge Vset.

[0100] If the state of charge Vcell is less than target state of charge Vset, the buck converter **412** is applied to the selected cell at **4180**. At **4200** the charge time is monitored as determined by prioritization, and the applied voltage is monitored at **4220**. If the charge time expires, the equalization charger circuit is removed at **4340**. If the charge time has not expired, but the voltage from the buck converter that is applied to the selected cell is too high, the charging voltage is decreased at **4240**.

[0101] If the state of charge (Vcell) is greater than target state of charge (Vset), the boost converter **414** is applied to the selected cell at **4260**. At **4280** the discharge time is monitored as determined by prioritization, and the applied voltage is monitored at **4300**. If the discharge time expires, the boost converter **414** is removed at **4340**. If the discharge time has not expired, but the voltage being applied from the selected cell to the input of the boost converter is too low, the discharge current is decreased at **4240**.

[0102] If the state of charge Vcell is equal to target state of charge Vset, within a pre-established deadband, the equalization converter **400** is removed from the selected cell at **4340**. At **4360** the selected pair of switches is de-energized, decoupling the selected cell from the cell balancing circuitry. At **4380** subroutine "EQUALIZE" returns.

[0103] Referring back to FIG. **7**A, at **1240** the equalize time is compared with a pre-determined interval (e.g. 5 minutes). If the equalize time does not exceed the pre-determined interval, the routine loops back to **1180** to repeat subroutine "SCAN CELLS" in preparation for another equalization. If the pre-determined interval has been exceeded, the temperatures of the individual cells are scanned at **1260**. At **1280** each of the scanned temperatures T is compared to a pre-established high temperature limit, Tlim. If any of the scanned temperatures T is greater than temperature limit Tlim, the system is shut down at **1320**. If not, a determination is made

at **1300** whether the temperature of any cell has changed (|ΔT|) by more than a prescribed increment Tc (e.g., 5 degrees Celsius). If not, the routine loops back to **1180** to repeat subroutine "SCAN CELLS" in preparation for another equalization. If so, the routine loops back to **1040**, resetting the cell number to 1 and repeating the process at subroutine "READ IMPEDANCE".

[0104] Embodiments of the equalization converter **400** may include separate or integrated buck and boost power converters to monitor the condition of an individual, selectable, cell in a series string of cells. Such embodiments also achieve desired cell equalization, such as charging an individual cell from the series string (buck mode) or transferring excess energy from an overcharged cell to the series string (boost mode). In particular, charge may be added or subtracted from an individual cell in a non-dissipative manner.

[0105] With respect to monitoring in general, testing of cell state of charge involves measuring temperature, open circuit voltage, and voltage under a fixed load for a certain period of time. Typically, the load current used is a discharge current into a resistive load, resulting in wasted energy (i.e., dissipation). If a conventional dissipative load is applied to a cell, it is normal to keep the measurement time as short as possible to avoid discharging the cell.

[0106] Embodiments of the equalization converter can be used in a cell balancing system to make the necessary measurements of open circuit voltage and voltage under load, as well as the change of these voltages over time, in a non-dissipative manner by monitoring the amplitude of the voltage ripple across the cell while transferring energy in either a positive (charge) or negative (discharge) mode without wasting energy. This non-dissipative technique has the advantage of extending this measurement time indefinitely, since it is occurring as part of the normal cell balancing process.

[0107] In particular, the equalization converter withdraws or inserts constant amplitude current pulses into a cell. In the time interval between these pulses, the open circuit voltage is present and measured. At the peak of the current pulses, the internal resistance of the cell affects the voltage in a positive or negative way depending on the direction of the current. The difference between the open circuit voltage and the voltage under load is the ripple. From multiple determinations of the voltage ripple, a more accurate cell impedance can be inferred. The length of time these current pulses are applied is the charge or discharge time.

[0108] In addition, low resistance bi-directional cell selector switches that connect the equalization converter to an individual cell are essentially lossless connections for monitoring the ripple across the cell.

[0109] With respect to equalization of cell state of charge, the equalization converter **400** removes energy in integer "packets" from an individual cell in a series string of storage cells (e.g., lithium ion cells) and transfers that energy to the series string as a whole or vice versa. The rate of transfer of these packets represents the power being transferred. A timer produces a packet by charging the primary side of an inductor/transformer for a period of time T**1**. A second timer controls the number of these packets produced per second at a rate of 1/T**2**. Immediately following the period T**1**, the energy is transferred to the battery string via the discharge of the energy stored in the inductor/transformer. The primary and secondary of the converter are electrically isolated so that the primary can be switched to any arbitrary cell. The size of the energy packet is controlled by varying T**1**, and the power by varying the time T**2**.

[0110] FIG. **8**A is a schematic diagram illustrating the operation of a boost converter according to one embodiment. In particular, the boost converter enhances monitoring of the state of charge within a cell by withdrawing fixed amplitude current pulses from the cell and observing the resultant voltage "ripple." The amplitude of the resulting ripple voltage can be used to infer the impedance of the cell. This technique provides a more accurate indication of state of charge than the average cell voltage taken alone. The current pulses are "up-converted" to a higher voltage and returned to the series string with only negligible losses. This approach is an improvement over prior art equalization methods that place a dissipative load on selected cells, thus wasting their energy.

[0111] In more detail, a pulse generator T**1** generates pulses of fixed length T**1**, that are used to close switch S**1** connecting the cell to the inductor Lp. Current from the cell then charges the inductor (Lp) with a triangular shaped current ramp reaching a peak current (Ipp) of:

$$Ipp = V\text{cell} * Lp/T1$$

[0112] The resulting pulse of energy (Ep) is stored in the magnetic field of the inductor. The pulse energy is: $Ep = \frac{1}{2} Lp * Ipp^2$. When pulse T**1** transitions low, switch S**1** is turned off and the magnetic field collapses. This causes the energy to discharge into the transformer secondary Ls. The peak current in the secondary winding (Ips), assuming negligible losses, is:

$$Ips = (2 * Vbat/Ls)^{1/2}$$

This secondary peak current discharges into the output capacitor C**1** in time T**3**, where:

$$T3 = (Vbat * Ls)/Ips$$

[0113] It follows that the power output is proportional to the number of T**1** pulses per second, or 1/T**2**. When the secondary voltage across inductor Ls**2** reaches a voltage determined by the voltage reference (Ref), the pulse generator T**2** stops generating T**1** pulses since the Enable signal is removed from the pulse generator T**2**. Ideally, the second secondary has the same number of turns as the first secondary Ls and therefore reflects the secondary voltage across the isolation barrier.

[0114] FIG. **8**B is a schematic diagram illustrating the operation of a buck converter according to one embodiment. In particular, current is drawn from the battery stack **100** and delivered to an individually selected cell **105**. By adding switch S**2** on the secondary side and diode D**1** on the primary side of the circuit in FIG. **8**A completes the conversion to a buck converter. Not shown in FIG. **8**B is isolation circuitry to drive switch S**2** across the isolation barrier. Additionally, minor adjustments to the voltage regulator and timer portions may also be necessary.

[0115] As shown, a pulse generator T**1** generates pulses of fixed length T**1** that are used to close switch S**2** connecting the string of cells to the inductor Ls . Current from the string then charges the inductor (Ls) with a triangular shaped current ramp reaching a peak current (Isp). The resulting pulse of energy (Ep) is stored in the magnetic field of the inductor Ls.

[0116] When pulse T**1** transitions low, switch S**1** is turned off and the magnetic field collapses. This causes the energy to discharge into the inductor Lp. This secondary peak current

discharges into the output capacitor C**1** in time T**3**. It follows that the power output is proportional to the number of T**1** pulses per second, or 1/T**2**.

[0117] When the voltage across inductor Ls**2** reaches a voltage determined by the voltage reference (Ref), the pulse generator T**2** stops generating T**1** pulses since the Enable signal is removed from the pulse generator T**2**. Ideally, inductor Ls**2** has the same number of turns as inductor Ls and therefore reflects the voltage across the isolation barrier.

[0118] Both diodes D**1** and the secondary rectifier diode can be considered part of the switches S**1** and S**2**, as they are the bulk substrate "intrinsic" diodes of N-channel FETS. These intrinsic diodes are now available in their companion FETS as high speed diodes and improve the switching efficiency of the circuit. If the Boost circuit is built with an N channel FET as the rectifier on the secondary side, then no additional power components are needed to convert it to a buck circuit with associated savings in space and parts cost.

[0119] FIG. **9** is a diagram of a cell balancing system having reduced switch blocking voltage requirements according to one embodiment. Due to the modular nature of embodiments of the cell balancing circuitry, the maximum voltage accommodated by the switch matrix switching devices may be limited to attainable and affordable ratings by connecting multiple cell balancing circuits in series, providing one for each module of cells constituting the HEV battery pack.

[0120] In this embodiment, multiple battery module units, or modules, **100***a*, **100***b* form the battery pack **100** having a total voltage potential Vp. Each battery module is coupled to a respective equalization converter **400***a*, **400***b* by a corresponding switch matrix **300***a*, **300***b*. The equalization coverters **400***a*, **400***b* are coupled in series, such that each converter is coupled across the terminals of a corresponding battery module **100***a*, **100***b*. This configuration reduces the switch blocking voltage requirement to Vp/M where M is the number of battery modules connected in series. In the illustrated embodiment, there are M=2 modules, resulting in each unit balancing the state of charge of a string of cells of the respective battery module **100***a*, **100***b* with the switch blocking voltage requirement reduced in half. By reducing the switch blocking voltage, cost benefits exist due to the ability to use lower voltage rated switch components.

[0121] A master control unit **600** directs local control units **500***a*, **500***b* in selectively monitoring and equalizing (i.e. charging and discharging) individual cells of the battery modules **100***a*, **100***b* as previously described. The master control unit **600** and the control units **500***a*, **500***b* may communicate over a galvanically isolated serial data communication link. In particular, the master control unit **600** broadcasts pack current and equalization setpoint values (i.e., target state of charge) to the local control units **500***a*, **500***b*. Likewise, the local control units may communicate diagnostic or prognostic status information to the master control unit **600**, such as voltage, current, and temperature, from the modules.

[0122] FIGS. **10** and **11** illustrate particular embodiments for reducing switch voltage blocking requirements utilizing the unidirectional and bidirectional switch matrix configurations respectively. Such embodiments result in the individual cells of a corresponding battery module being equalized to a target state of charge. However, the target state of charge in one battery module **100***a* may be different from the target state of charge for another battery module **100***b*.

[0123] Due to the modular nature of the cell balancing circuitry, many different configurations may be employed. For example, it is possible to have a configuration where one or more battery modules in a battery pack have their states of charge being balanced by embodiments of the cell balancing system, while other battery modules within the same battery pack are balanced using other known cell balancing systems. Furthermore, it is also possible to employ a nested control system where one or more battery modules in a battery pack have their states of charge individually balanced by embodiments of the cell balancing system and a secondary control system for balancing the state of charge across the entire pack. The secondary control system may be an embodiment of the cell balancing system or alternatively a different cell balancing system. Thus, the cell balancing may be applied to electrical energy storage units which may be cells or modules of multiple cells.

[0124] FIG. **12** is a diagram illustrating a cell balancing system according to an alternative embodiment. In the illustrated embodiment, equalization converters **400***a*, **400***b* are coupled to the terminals of the entire battery pack of M battery modules, resulting in the individual cells of each battery module being equalized to a common target state of charge. However, this configuration requires a switch blocking voltage requirement that is at least equal to the maximum voltage of the pack.

[0125] While this invention has been particularly shown and described with references to preferred embodiments thereof, it will be understood by those skilled in the art that various changes in form and details may be made therein without departing from the scope of the invention encompassed by the appended claims.

1-22. (canceled)

23. A system, comprising:

a string of electrical energy storage units having a first end and a second end; and

a buck-boost dc-dc power converted coupled simultaneously to a selected portion of the string of electrical energy storage units and to the first and second ends of the string of electrical energy storage units, the power converter being configured to transfer energy bidirectionally between the selected portion of the string of storage units and the end points of the string of storage units,

wherein the power converter is configured to transfer energy at a controllable rate of transfer, and

the power converter comprises:

an up-converter configured to transfer energy from the selected portion of the string of storage units to the end points of the string of storage units; and

a down-converter configured to transfer energy from the string of storage units to the selected portion of the string of storage units.

24. The system of claim **23**, wherein the power converter is configured to monitor voltage and current data of the selected portion of the string of storage units resulting from a transfer of energy.

25. The system of claim **23**, wherein the power converter is configured to transfer units of energy between the selected portion of the string of storage units and the end points of the string of storage units.

26. The system of claim **23**, wherein the power converter comprises:

a primary inductor;

a first secondary inductor magnetically coupled to the primary inductor;

a first switch selectively coupling the selected portion of the string of storage units to the primary inductor; and

the first secondary inductor coupling to an output capacitor;

the output capacitor coupled in parallel to the string of storage units.

27. The system of claim **23**, further comprising:

a primary inductor;

a first secondary inductor magnetically coupled to the primary inductor;

a switch selectively coupling the first secondary inductor to the end points of the string of storage units, and configured to transfer energy from the string of storage units to charge the first secondary inductor when the switch is on, and to discharge energy into the primary inductor and charging the selected portion of the string of individual storage units when the switch is of.

28. The system of claim **23**, wherein a common transfer is configured to serve as the up-converter and the down converter.

29. The system of claim **23**, wherein each storage unit is a storage cell.

30. The system of claim **23**, wherein each storage unit is a battery module having a string of storage units.

31. The system of claim **23**, wherein a battery pack comprises a string of one or more storage units.

* * * * *