US 20080080098A1

(19) **United States**

(12) **Patent Application Publication**

(10) **Pub. No.: US 2008/0080098 A1**

(43) **Pub. Date: Apr. 3, 2008**

Fuke et al.

(54) **MAGNETO-RESISTANCE EFFECT ELEMENT, MAGNETIC HEAD, MAGNETIC RECORDING/REPRODUCING DEVICE AND MAGNETIC MEMORY**

(75) Inventors: **Hiromi Fuke**, Yokohama-shi (JP); **Susumu Hashimoto**, Nerima-ku (JP); **Masayuki Takagishi**, Kunitachi-shi (JP); **Hitoshi Iwasaki**, Yokosuka-shi (JP)

Correspondence Address:
NIXON & VANDERHYE, PC
901 NORTH GLEBE ROAD, 11TH FLOOR
ARLINGTON, VA 22203

(73) Assignees: **Kabushiki Kaisha Toshiba**, Tokyo (JP); **TDK Corporation**, Tokyo (JP)

(21) Appl. No.: **11/892,890**

(22) Filed: **Aug. 28, 2007**

(30) **Foreign Application Priority Data**

Sep. 28, 2006 (JP) P2006-265836

Publication Classification

(51) **Int. Cl.**
G11B 5/33 (2006.01)

(52) **U.S. Cl.** **360/314**

(57) **ABSTRACT**

A magneto-resistance effect element includes: a first magnetization layer of which a magnetization is substantially fixed in one direction; a second magnetization layer of which a magnetization is rotated in accordance with an external magnetic field; an intermediate layer which contains insulating portions and magnetic metallic portions and which is provided between the the first magnetic layer and the second magnetic layer; and a pair of electrodes to flow current in a direction perpendicular to a film surface of a multilayered film made of the first magnetic layer, the intermediate layer and the second magnetic layer; wherein the magnetic metallic portions of the intermediate layer contain non-ferromagnetic metal.

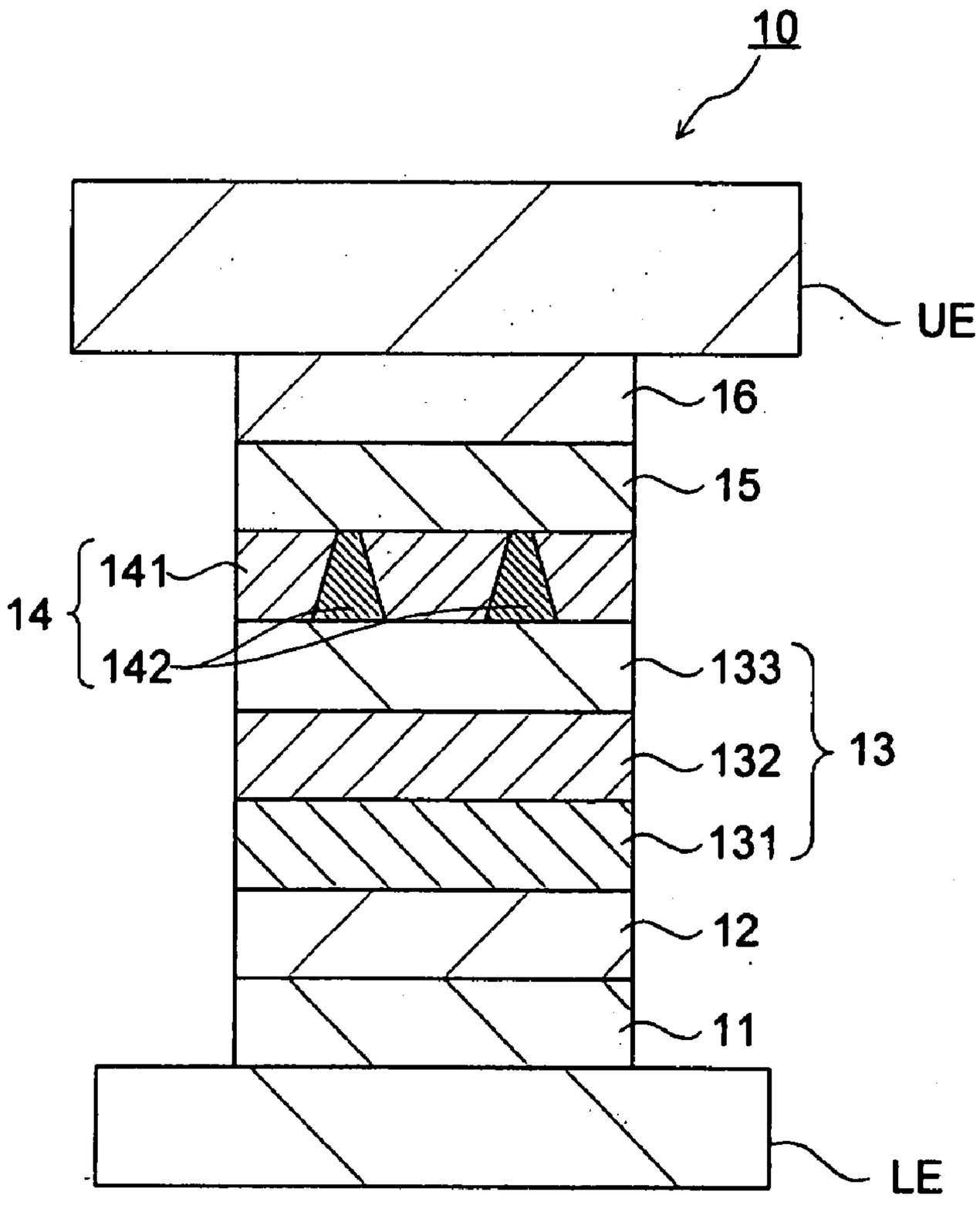

FIG. 1

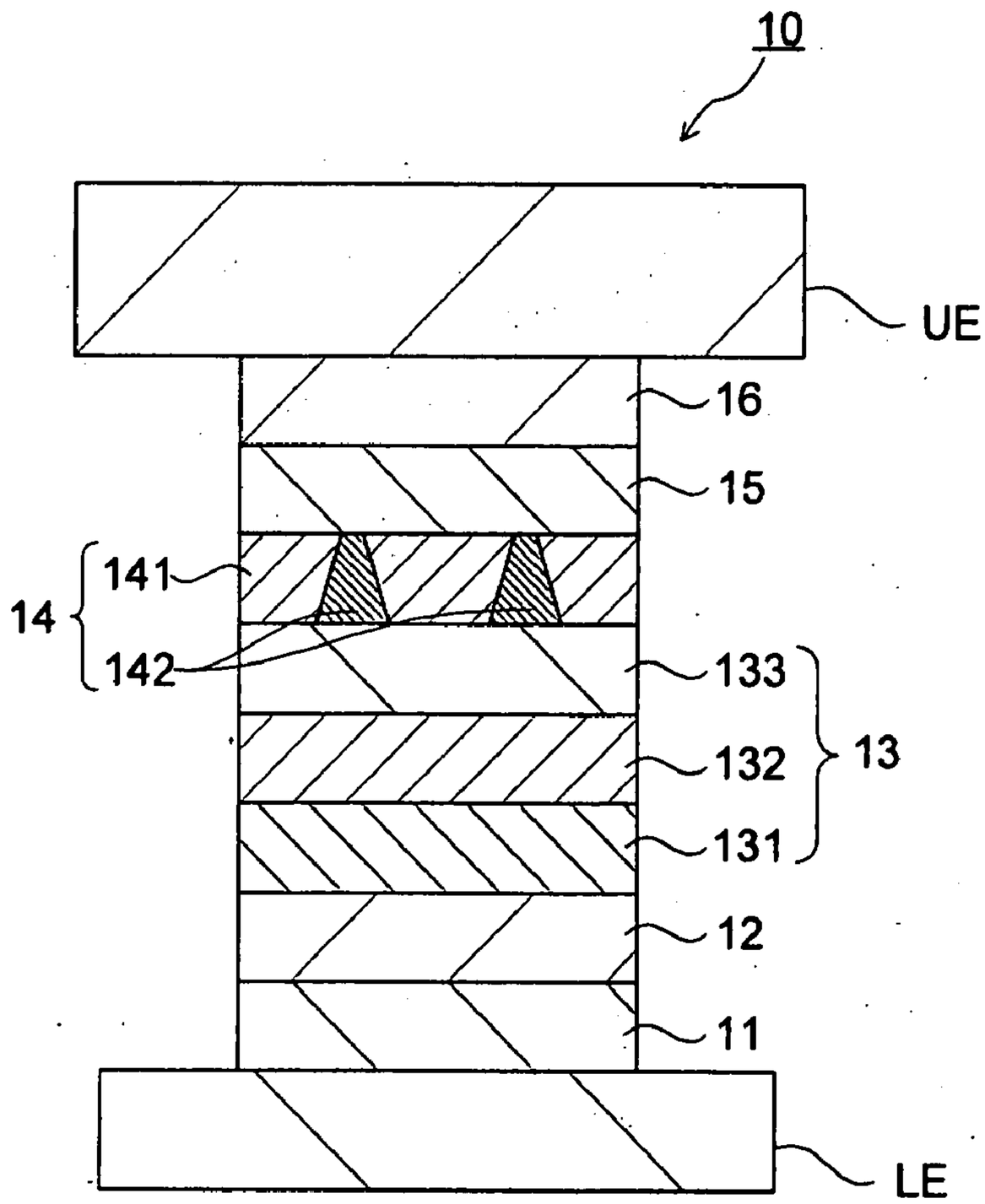

FIG. 2

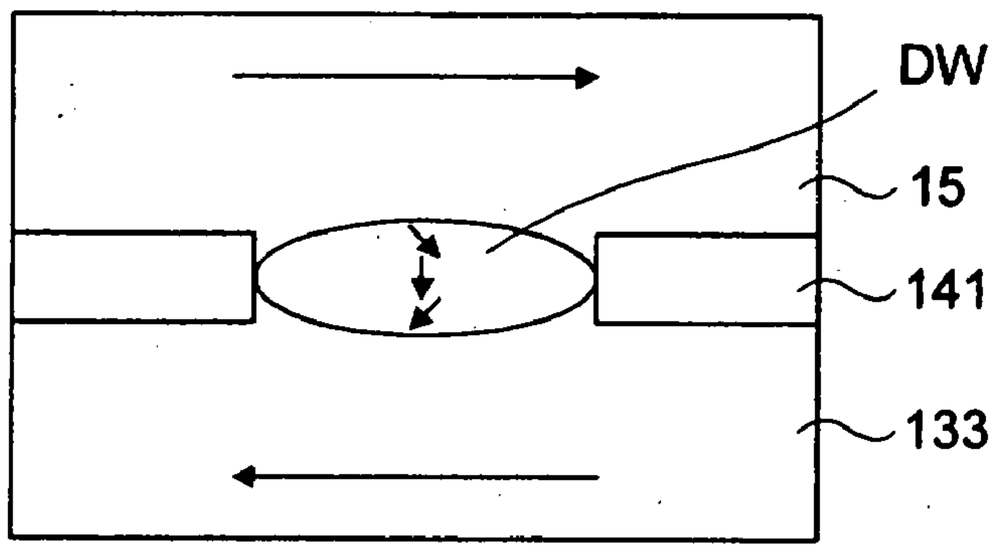

FIG. 3

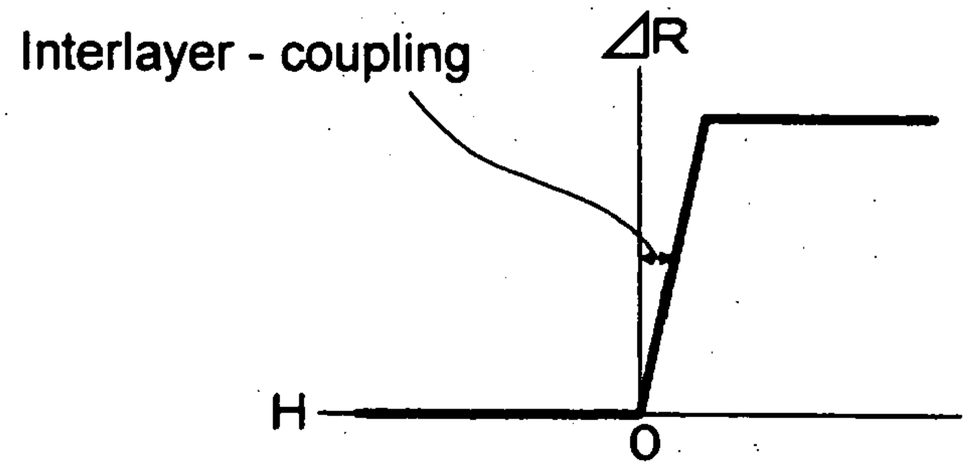

FIG. 4

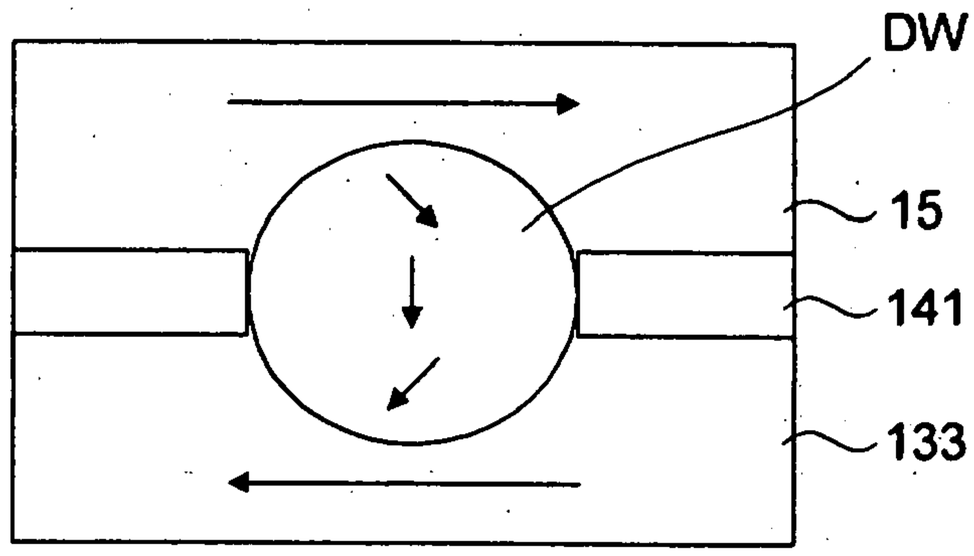

FIG. 5

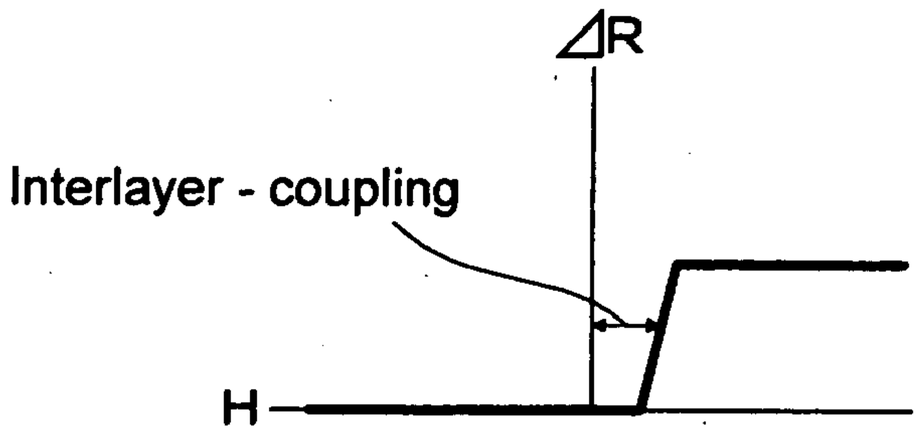

FIG. 6

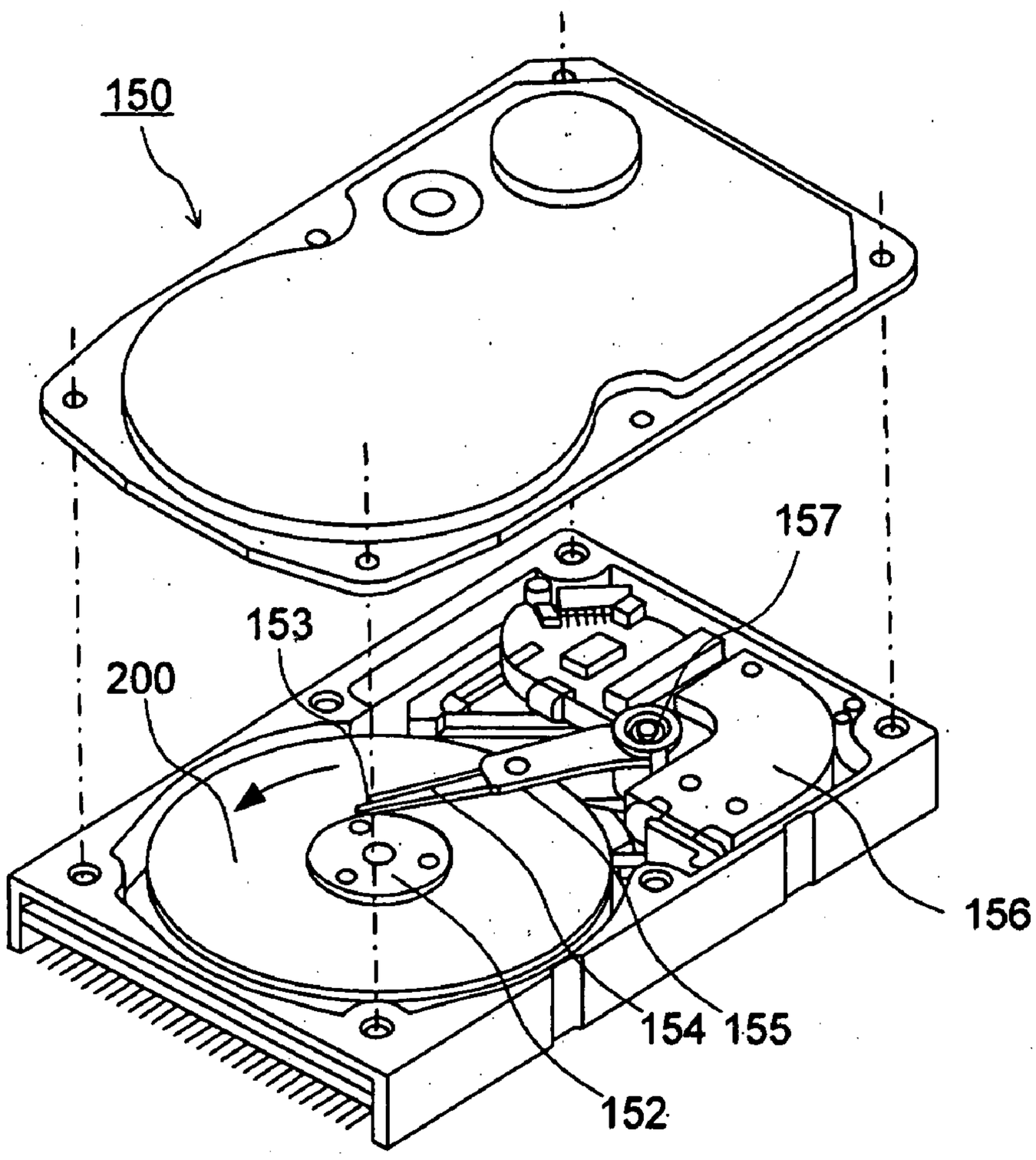

FIG. 7

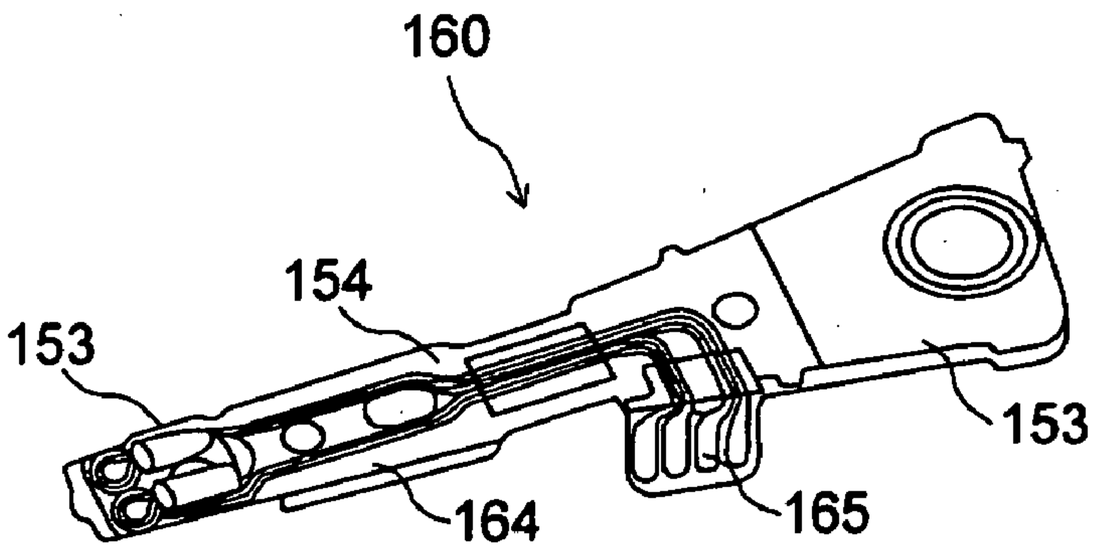

FIG. 8

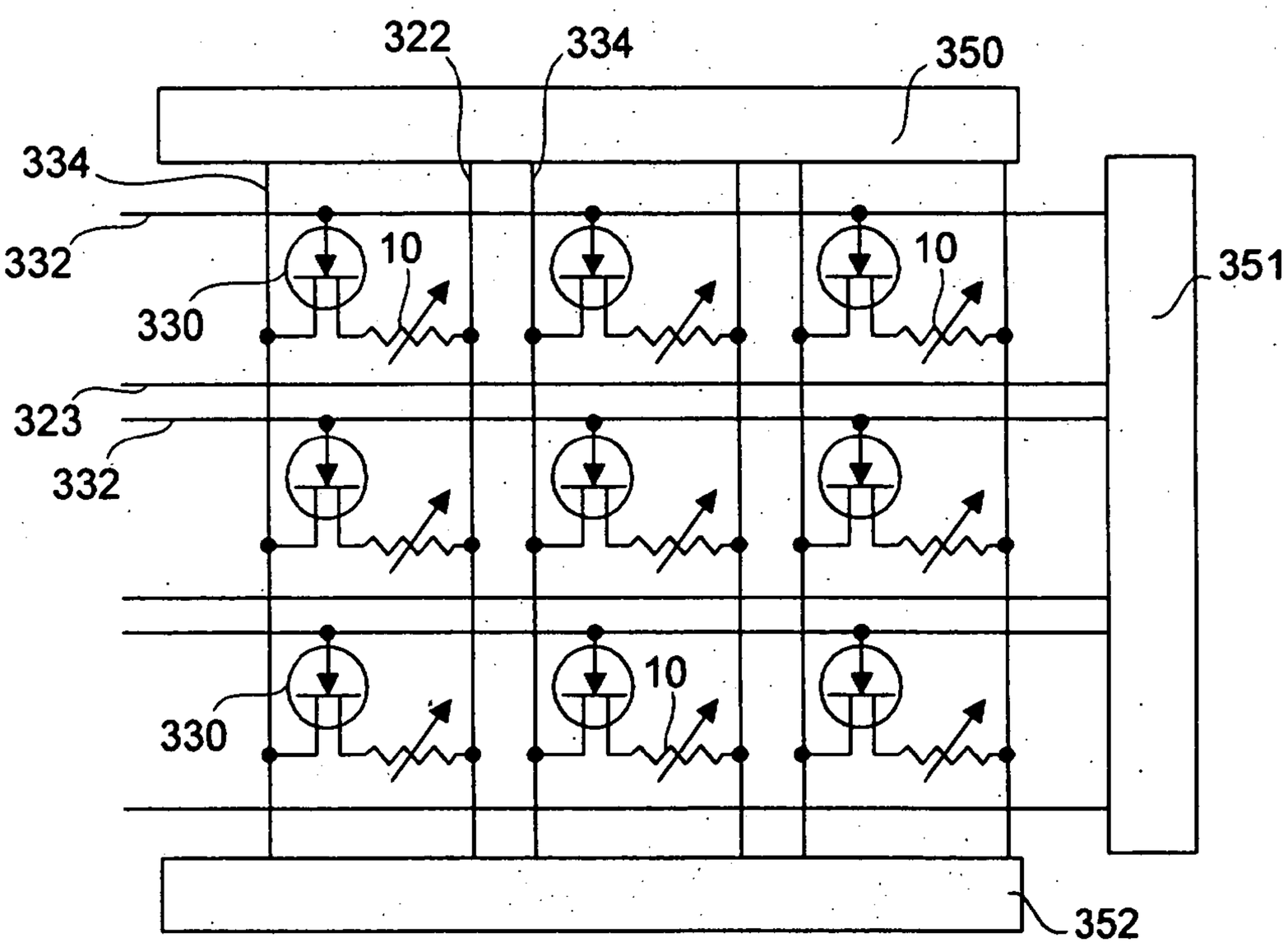
322
334
350
334
332
10
10
351
330
323
332
10
330
352

FIG. 9

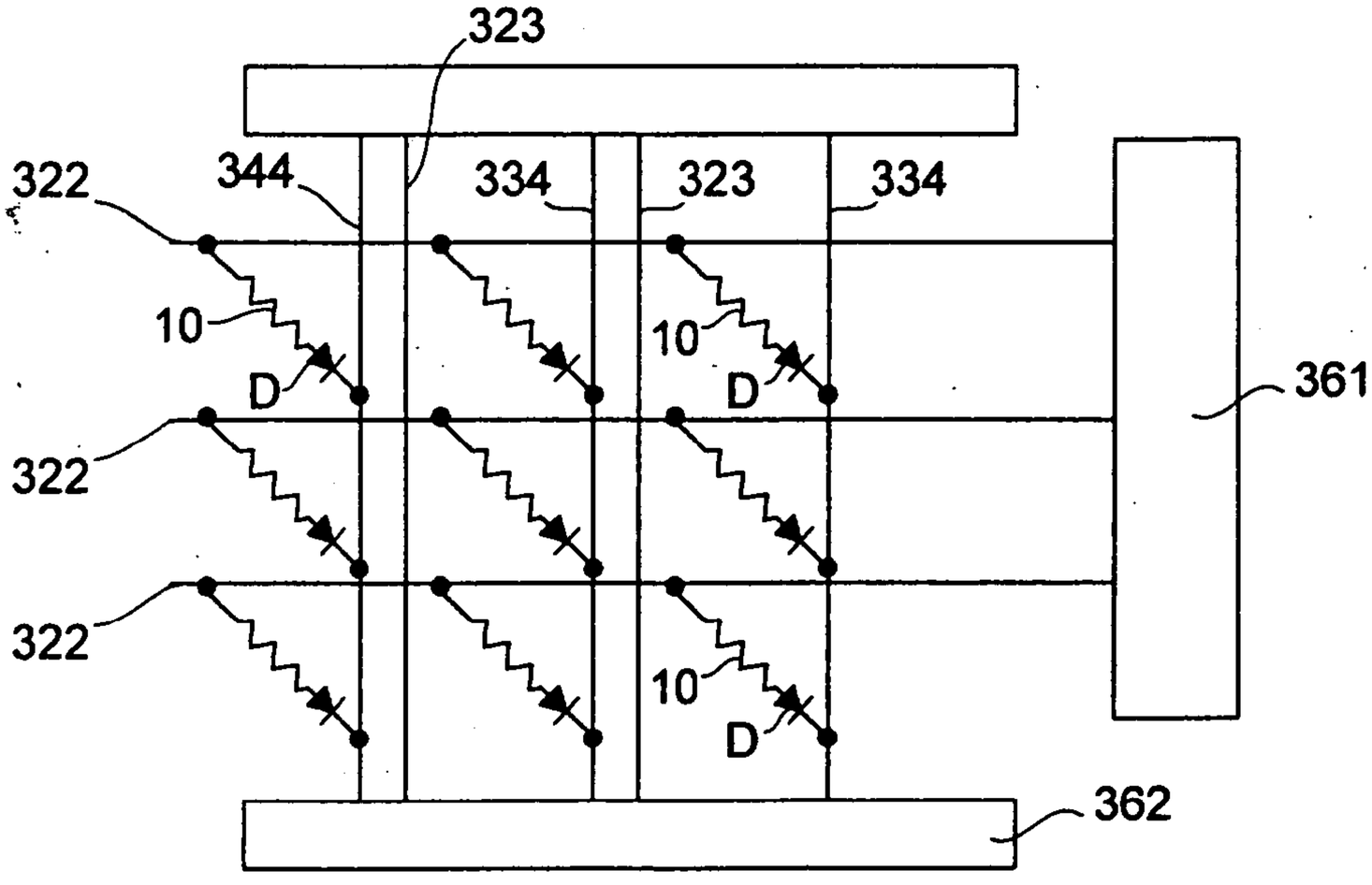
323
322
344
334
323
334
10
10
361
D
D
322
322
10
D
362

FIG. 10

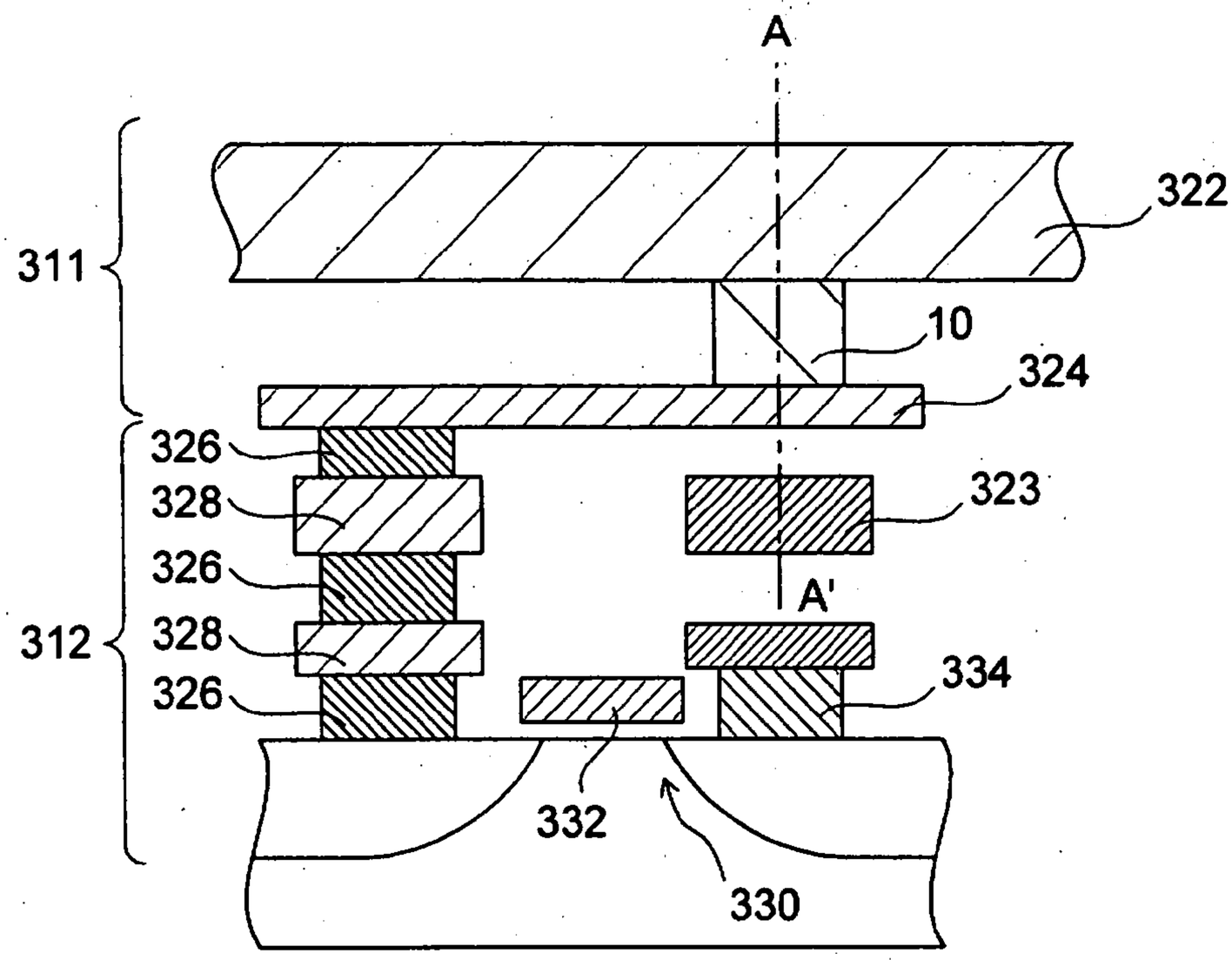
A
322
311
10
324
326
328
326
328
326
312
323
A'
334
332
330

FIG. 11

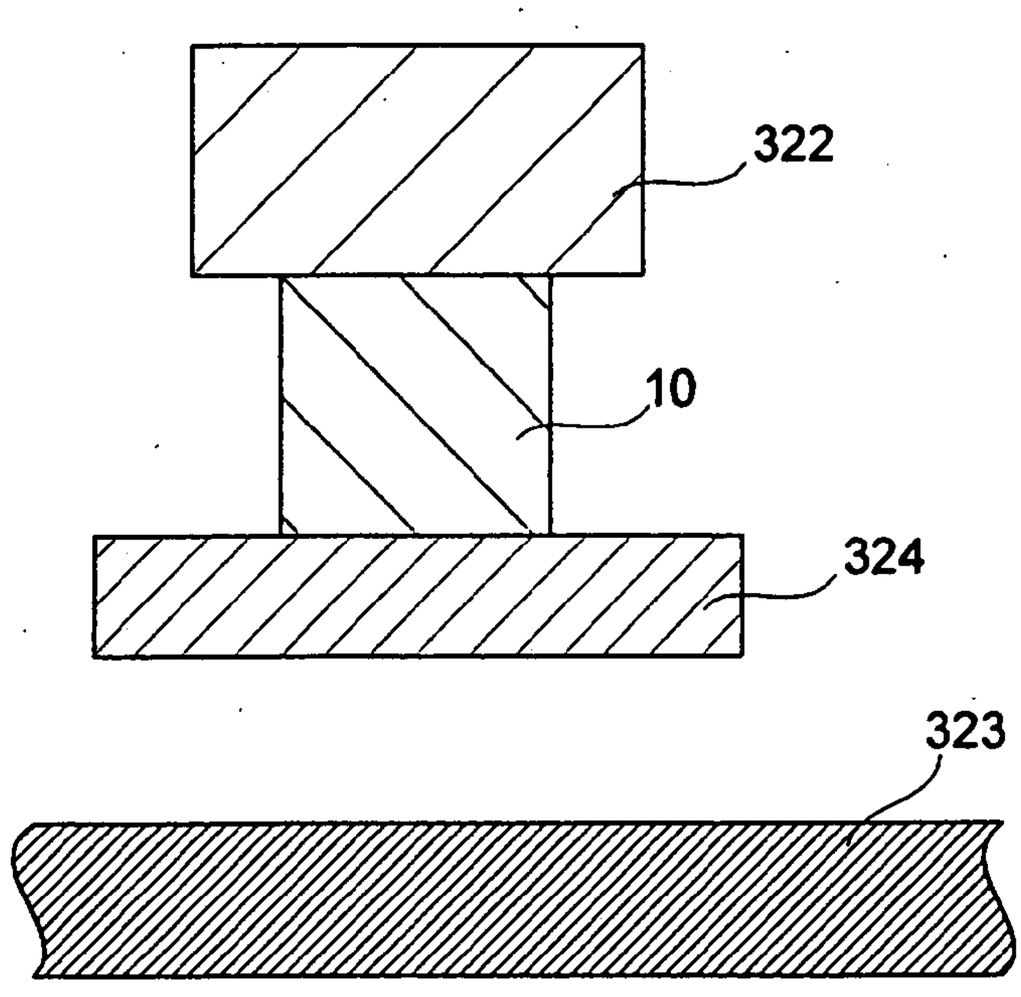
322
10
324
323

MAGNETO-RESISTANCE EFFECT ELEMENT, MAGNETIC HEAD, MAGNETIC RECORDING/REPRODUCING DEVICE AND MAGNETIC MEMORY

CROSS-REFERENCE TO RELATED APPLICATIONS

[0001] This application is based upon and claims the benefit of priority from the prior Japanese Patent Application No. 2006-265836, filed on Sep. 28, 2006; the entire contents of which are incorporated herein by reference.

BACKGROUND OF THE INVENTION

[0002] 1. Field of the Invention

[0003] The present invention relates to a magneto-resistance effect element which is configured such that a current is flowed in the direction perpendicular to the film surface thereof. The present invention also relates to a magnetic head, a magnetic recording/reproducing device and a magnetic memory which utilize the magneto-resistance effect element according to the present invention.

[0004] 2. Description of the Related Art

[0005] Recently, the performance of a magnetic device, particularly such as a magnetic head is enhanced by means of Giant Magneto-Resistance Effect (GMR) made of a multilayered magnetic structure. Particularly, since a spin valve film (SV film) can exhibit a larger GMR effect, the SV film has developed the magnetic device such as a magnetic head and MRAM (Magnetic Random Access Memory).

[0006] The "spin valve" film has such a structure as sandwiching a non-magnetic metal spacer layer between two ferromagnetic layers and is configured such that the magnetization of one ferromagnetic layer (often called as a "pinning layer" or "fixed magnetization layer) is fixed by the magnetization of an anti-ferromagnetic layer and the magnetization of the other ferromagnetic layer (often called as a "free layer" or "free magnetization layer") is rotated in accordance with an external magnetic field. With the spin valve film, the large MR effect can be obtained by the variation of the relative angle in magnetization between the pinned layer and the free layer.

[0007] A conventional spin valve film is employed for a CIP (Current In plane)-GMR element. In the CIP-GMR element, a sense current is flowed to the SV film in the direction parallel to the film surface thereof. Recently, attention is paid to a CPP (Current Perpendicular to Plane)-GMR element and a TMR (Tunneling Magneto Resistance) element because the CPP-GMR element and the TMR element can exhibit the respective large MR effect in comparison with the CIP element. In the CPP-GMR element and the TMR element, a sense current is flowed to the SV film in the direction almost perpendicular to the film surface thereof.

[0008] Recently, it was confirmed that a large MR effect with high MR-ratio can be obtained from the minute coupling of Ni wires (Reference 1).

[0009] Then, the minute magnetic coupling is formed three-dimensionally so as to realize a magneto-resistance effect element with high MR ratio (Reference 2). In this case, the three-dimensional minute magnetic coupling is carried out by means of EB (Electron beam) irradiation, FIB (Focused Ion beam) irradiation or AFM (Atomic Force Microscope).

[0010] [Reference 1] Phys. Rev. Lett. 82 2923(1999)

[0011] [Reference 2] JP-A 2003-204095 (KOKAI)

[0012] It is considered that the MR effect as described above is originated from the rapid variation in magnetization at the minute magnetic coupling point. Namely, if the magnetic domain to be formed at the minute magnetic coupling point is narrowed, the large MR effect can be obtained. The magnetic domain can be indirectly narrowed by decreasing the size (diameter) of the minute magnetic coupling point (the size (diameter) of the ferromagnetic metallic portion of the complex spacer layer). However, too small size of the minute magnetic coupling point may increase the resistance thereof excessively.

[0013] On the other hand, if the size of the minute magnetic coupling point is enlarged, the resistance of the minute magnetic coupling point can be reduced, but too large size of the minute magnetic coupling point may strengthen the magnetic coupling between the pinned layer and the free layer via the minute magnetic coupling so as to increase the interlayer-coupling. The increase of the interlayer-coupling causes undesirably the shift of the operating point toward the higher magnetic field at the magnetic head containing the minute magnetic coupling.

BRIEF SUMMARY OF THE INVENTION

[0014] It is an object of the present invention to provide a new magneto-resistance effect element which can exhibit a larger MR effect without the shift of operating point due to the low resistance and the high interlayer-coupling.

[0015] In order to achieve the above object, an aspect of the present invention relates to a magneto-resistance effect element, comprising: a first magnetization layer of which a magnetization is substantially fixed in one direction; a second magnetization layer of which a magnetization is rotated in accordance with an external magnetic field; an intermediate layer which contains insulating portions and magnetic metallic portions and which is provided between the first magnetic layer and the second magnetic layer; and a pair of electrodes to flow current in a direction perpendicular to a film surface of a multilayered film made of the first magnetic layer, the intermediate layer and the second magnetic layer; wherein the magnetic metallic portions of the intermediate layer contain non-ferromagnetic metal.

[0016] The inventors had intensely studied to achieve the above object. As a result, according to the aspect of the present invention, an intermediate layer containing insulating portions and magnetic metallic portions is provided between the first magnetic layer and the second magnetic layer to cause the magnetic coupling via the magnetic metallic portions of the intermediate layer. Then, non-ferromagnetic metal is contained in the magnetic metallic portions of the intermediate layer so that the magnetization of the magnetic metallic portions can be reduced.

[0017] As a result, since the width of the magnetic wall, which is formed in the magnetic metallic portion of the intermediate layer, is decreased in the thickness direction, the resistance change ratio, that is, the MR effect can be enhanced and the interlayer-coupling between the first magnetic layer and the second magnetic layer, which sandwich the intermediate layer, can be suppressed. Particularly, even though the diameter of the minute magnetic coupling point is increased so as to decrease the element resistance, the interlayer-coupling can be reduced.

[0018] The non-ferromagnetic metal may be at least one selected from the group consisting of Cu, Cr, V, Ta, Nb, Sc, Ti, Mn, Zn, Ga, Ge, Zr, Y, Tc, Re, B, In, C, Si, Sn, Ca, Sr, Ba, Au, Ag, Pd, Pt, Ir, Rh, Ru, Os and Hf. Particularly, the non-ferromagnetic metal may contain at least Cu.

[0019] Similarly, the magnetic metallic portions of the intermediate layer may contain at least one of Fe, Co and Ni. Also, the first magnetic layer and the second magnetic layer may contain at least one of Fe, Co and Ni.

[0020] According to the aspects of the present invention can be provided a new magneto-resistance effect element which can exhibit a larger MR effect without the shift of operating point due to the low resistance and the high interlayer-coupling.

BRIEF DESCRIPTION OF THE SEVERAL VIEWS OF THE DRAWINGS

[0021] FIG. **1** is a structural view illustrating an embodiment of the magneto-resistance effect element according to the present invention.

[0022] FIG. **2** is an explanatory view schematically showing the cross sectional state of the magnetization of the magneto-resistance effect element in FIG. **1** in the vicinity of the intermediate layer thereof.

[0023] FIG. **3** is a graph showing the dependence of the resistance change ratio AR with the external magnetic field H in the magneto-resistance effect element in FIG. **1**.

[0024] FIG. **4** is an explanatory view schematically showing the cross sectional state of the magnetization of a magneto-resistance effect element which is different from the magneto-resistance effect element in FIG. **1** and which does not contain a non-ferromagnetic portion in the ferromagnetic portion of the intermediate layer thereof.

[0025] FIG. **5** is a graph showing the dependence of the resistance change ratio ΔR with the external magnetic field H in the magneto-resistance effect element in FIG. **4**.

[0026] FIG. **6** is a perspective view illustrating a magnetic recording/reproducing device according to the present invention.

[0027] FIG. **7** is a perspective view illustrating the magnetic head assembly of the magnetic recording/reproducing device in FIG. **6**.

[0028] FIG. **8** is a view illustrating a magnetic memory matrix according to the present invention.

[0029] FIG. **9** is a view illustrating another magnetic memory matrix according to the present invention.

[0030] FIG. **10** is a cross sectional view illustrating an essential part of the magnetic memory.

[0031] FIG. **11** is a cross sectional view of the magnetic memory illustrated in FIG. **10**, taken on line "A-A".

DETAILED DESCRIPTION OF THE INVENTION

[0032] Hereinafter, the present invention will be described in detail with reference to the drawings.

(Magneto-Resistance Effect Element)

[0033] FIG. **1** is a perspective view illustrating a magneto-resistance effect element according to an embodiment of the present invention. Some or all components throughout the drawings in the present application are schematically illustrated so that the illustrated sizes (thickness) and thickness ratio for the components is different from the real sizes and thickness ratio for the components.

[0034] The magneto-resistance effect element **10** illustrated in FIG. **1** includes a bottom electrode LE and a top electrode UE which are disposed so as to sandwich a plurality of layers composing the magneto-resistance effect element **10**. Concretely, the magneto-resistance effect element **10** is configured such that an underlayer **11**, an antiferromagnetic layer **12**, a complex pinned layer **13**, an intermediate layer **14**, a free layer **15** and a protective layer **16** are subsequently formed on the bottom electrode LE. The complex pinned layer **13** is configured such that a magnetic anti-parallel coupling layer **132** is sandwiched between a first pinned layer **131** and a second pinned layer **132**. The intermediate layer **14** is composed of insulating portions **141** and magnetic metallic portions **142** which are disposed alternately in the intermediate layer **14**.

[0035] In this embodiment, the complex pinned layer **13**, the intermediate layer **14** and the free layer **15** constitute the spin valve film.

[0036] The complex pinned layer **13** corresponds to a first magnetic layer, as defined in claims, of which the magnetization is substantially fixed in one direction, and the free layer **15** corresponds to a second magnetic layer, as defined in claims, of which the magnetization is rotated in accordance with an external magnetic field. The intermediate layer **14** corresponds to an intermediate layer as defined in claims. The first magnetic layer may be made of a single magnetic layer instead of a multilayered structure such as the complex magnetic layer **13**.

[0037] The bottom electrode LE and the top electrode UE function as flowing a sense current to the magneto-resistance effect element **10** in the direction perpendicular to the film surface of the spin valve film. As a result, the magneto-resistance effect element **10** constitutes a CPP (Current Perpendicular to Plane) type magneto-resistance effect element configured such that the sense current is flowed in the direction perpendicular to the film surface of the element.

[0038] The underlayer **11** maybe formed as a two-layered structure of a buffer layer and a seed layer, for example. The buffer layer can relax the surface roughness of the bottom electrode LE and be made of Ta, Ti, W, Zr, Hf, Cr or an alloy thereof. The seed layer functions as controlling the crystalline orientation of the spin valve film and be made of Ru, $(Fe_xNi_{100-x})_{100-y}X_y$ (X═Cr, V, Nb, Hf, Zr, Mo; 15<x<25, 20<y<45).

[0039] The antiferromagnetic layer **12** may be made of antiferromagnetic material (e.g., PtMn, PdPtMn, IrMn, RuRhMn) which applies unidirectional anisotropy to the complex pinned layer **13** so as to fix the magnetization of the complex pinned layer **13**.

[0040] The first pinned layer **131** and the second pinned layer **132** of the complex pinned layer **13** may be made of, e.g., Fe, Co, Ni, FeCo alloy or FeNi alloy. The magnetic anti-parallel coupling layer **132** functions as coupling in antiferromagnetism the first pinned layer **131** and the second pinned layer **132** and may be made of Ru, Ir or Rh.

[0041] The insulating portion **141** of the intermediate layer **14** may be made of an oxide, a nitride, an oxynitride or a carbide containing at least one selected from the group consisting of Al, Mg, Li, Si, Ca, Sc, Ti, V, Cr, Mn, Fe, Co, Ni, Cu, Zn, Ga, Se, Sr, Y, Zr, Nb, Mo, Pd, Ag, Cd, In, Sn,

Sb, Ba, Ka, Hf, Ta, W, Re, Pt, Hg, Pb, Bi and lanthanoid. The insulating portion **141** may be made of another electrically insulating material.

[0042] The magnetic metallic portion **142** of the intermediate layer **14** functions as an electric current path to flow current therethrough in the direction perpendicular to the film surface of the intermediate layer **14** and may be made of single ferromagnetic material such as Fe, Co, Ni or ferromagnetic alloy material. When a magnetic field directed at the direction opposite to the direction of the magnetization of the second pinned layer **132** is applied to the free layer **15** so that the direction of the magnetization of the free layer **15** is aligned in the direction of the magnetic field, the direction of the magnetization of the second pinned layer **133** becomes anti-parallel to the direction of the magnetization of the free layer **15**. In this case, since the magnetic metallic portion **142** is sandwiched between the ferromagnetic layers (complex pinned layer **13** and the free layer **15**) with the respective different directions of magnetization, a magnetic domain wall DW is formed in the magnetic metallic portion **142**.

[0043] In this embodiment, the diameter "d" of the magnetic metallic portion **142** is not constant in the thickness direction as shown in FIG. **1** (In FIG. **1**, the top width of the metallic portion **142** becomes larger than the bottom width of the metallic portion **142**). In this case, the typical diameter "d" can be defined by the average diameter in thickness direction.

[0044] In this embodiment, non-ferromagnetic metal is incorporated in the magnetic metallic portion **142** of the intermediate layer **14**. The non-ferromagnetic metal can be selected from the group consisting of Cu, Cr, V, Ta, Nb, Sc, Ti, Mn, Zn, Ga, Ge, Zr, Y, Tc, Re, B, In, C, Si, Sn, Ca, Sr, Ba, Au, Ag, Pd, Pt, Ir, Rh, Ru, Os, Hf. Preferably, the non-magnetic metal is Cu. In this case, the interlayer-coupling between the complex pinned layer **13** (second pinned layer **133**) and the free layer **15** can be suppressed even though the diameter of the minute magnetic coupling point, that is, the magnetic metallic portion **142** is enlarged so as to decrease the resistance between the complex pinned layer **13** and the free layer **15**.

[0045] The free layer (free magnetization layer) **15** may be made of ferromagnetic material (e.g., Fe, Co, Ni, FeCo alloy, FeNi alloy) so that the magnetization of the free layer **15** can be rotated in accordance with an external magnetic field. In this embodiment, the free layer **15** is formed as a single-layered structure, but may be formed as a multilayered structure composed of a plurality of layers stacked.

[0046] The protective layer **16** functions as protecting the spin valve film. The protective layer **16** may be formed as a two-layered structure of Cu/Ru or a three-layered structure of Cu/Ta/Ru.

[0047] FIG. **2** is an explanatory view schematically showing the cross sectional state of the magnetization of the magneto-resistance effect element **10** in the vicinity of the intermediate layer **14**. FIG. **3** is a graph showing the R—H characteristic of the magneto-resistance effect element **10**.

[0048] In the magneto-resistance effect element **10** of this embodiment, as shown in FIG. **2**, since the non-ferromagnetic metal as described above is incorporated in the magnetic metallic portion **142** of the intermediate layer **14**, the magnetization (Ms) of the magnetic metallic portion **142** is reduced. Therefore, the interlayer-coupling between the complex pinned layer **13** (second pinned layer **133**) and the free layer **15** can be suppressed and the width of the magnetic domain wall DW, which is formed in the magnetic metallic portion **142**, is decreased in the thickness direction so as to enhance the resistance change ratio, that is, the MR effect.

[0049] In real, in the magneto-resistance effect element **10** of this embodiment, as shown in FIG. **3**, the shift of the R—H curve by the external magnetic field, which is originated from the interlayer-coupling, can not be almost recognized, and the resistance change ΔR becomes high.

[0050] FIG. **4** is an explanatory view schematically showing the cross sectional state of the magnetization of a magneto-resistance effect element which is different from the magneto-resistance effect element **10** and which does not contain the non-ferromagnetic metal in the magnetic metallic portion **142** of the intermediate layer **14**. FIG. **5** is a graph showing the R—H characteristic of the magneto-resistance effect element in FIG. **4**.

[0051] In the case that the non-ferromagnetic metal is not incorporated in the magnetic metallic portion **142** of the intermediate layer **14**, the width of the magnetic domain wall DW in the magnetic metallic portion **142** becomes almost equal to the diameter of the magnetic domain wall DW and becomes larger than the width of the insulating portion **141**. Therefore, the interlayer-coupling between the complex pinned layer **13** (second pinned layer **133**) and the free layer **15** is increased so as to reduce the resistance change ΔR.

[0052] In real, in the magneto-resistance effect element **10** of this embodiment, as shown in FIG. **5**, the shift of the R—H curve by the external magnetic field, which is originated from the interlayer-coupling, is observed, and the resistance change ΔR becomes low.

(Method for Manufacturing a Magneto-Resistance Effect Element)

[0053] Then, the method for manufacturing the magneto-resistance effect element will be schematically described. First of all, on the substrate are subsequently formed the bottom electrode LE, the underlayer **11**, the antiferromagnetic layer **12**, the complex pinned layer **13**, the intermediate layer **14**, the free layer **15**, the protective layer **16** and the top electrode UE. Normally, each layer is formed under depressurized atmosphere. Hereinafter, the forming process of each layer will be described.

(1) Formation of Bottom Electrode LE through Antiferromagnetic Layer **12**

[0054] The bottom electrode **11** is formed on the (not shown) substrate by means of micro-process in advance. Then, the underlayer **11** and the antiferromagnetic layer **12** are formed.

(2) Formation of Complex Pinned Layer **13**

[0055] Then, the first pinned layer **131**, the magnetic anti-parallel coupling layer **132** and the second pinned layer **133** are subsequently formed. In this case, a non-ferromagnetic metallic layer may be formed on the second pinned layer **133**. Also, an alloy layer made of the material consti-

tuting the pinned layer and the material constituting the non-ferromagnetic metallic layer may be formed on the second pinned layer **133**.

(3) Formation of Intermediate Layer **14**

[0056] Then, the formation of the intermediate layer **14** will be described. The intermediate layer **14** is composed of the insulating portions **141** made of Al_2O_3 and the magnetic metallic portions **142** made of a mixture of main Fe component and Cu component added to the main Fe component.

[0057] First of all, the first metallic layer is formed on the second pinned layer **133**. The first metallic layer contains the main Fe component as a supplier for the magnetic metallic layer **142** and the Cu component. Then, the second metallic layer (e.g., Al), which is to be converted into the insulating portions **141**, is formed on the first metallic layer. Then, ion beams of inert gas (e.g., Ar) are irradiated onto the second metallic layer so that the pre-treatment (ion treatment) can be carried out for the second metallic layer. According to the ion treatment, the elements of the first metallic layer are partially infiltrated into the second metallic layer. Instead of the ion treatment, another energy applying means may be employed. For example, the plasma treatment or the thermal treatment can be exemplified, but the energy applying means is not limited to the above-listed ones only if the elements of the first metallic layer are partially infiltrated into the second metallic layer.

[0058] Then, an oxidizing gas (e.g., an inert gas containing oxygen gas) is supplied so that the second metallic layer can be oxidized to form the insulating portions **141**. In this case, the oxidizing condition is determined so that some elements of the first metallic layer infiltrated into the second metallic layer are unlikely to be oxidized. According to the oxidizing treatment, the second metallic layer is converted into the insulating portions made of Al_2O_3, and the elements of the first metallic layer forms the magnetic metallic portions **142**.

[0059] Herein, the oxidizing method is not restricted only if the magnetic metallic portions **142** are not oxidized and remains. Concretely, ion beam oxidizing method, plasma oxidizing method or ion assisted oxidizing method may be employed. Instead of the oxidizing treatment, nitriding treatment or carbonizing treatment can be employed.

[0060] The intermediate layer **14** can be formed as follows. First of all, the first metallic layer as the supplier of the magnetic metallic portions **142** is formed on or as the second pinned layer **133**. Thereafter, the second metallic layer (e.g., Al) to be converted into the insulating portions **141** is formed on the first metallic layer. After the second metallic layer is formed, an oxidizing gas (e.g., an inert gas containing oxygen gas) is supplied so that the second metallic layer can be oxidized to form the insulating layer. Concretely, ion beam oxidizing method, plasma oxidizing method or ion assisted oxidizing method may be employed as the oxidizing treatment. Instead of the oxidizing treatment, nitriding treatment or carbonizing treatment can be employed.

[0061] Then, ion beams of inert gas (e.g., Ar) are irradiated onto the insulating portions so that the post-treatment (ion treatment) can be carried out for the insulating portions. According to the ion treatment, the elements of the first metallic layer are infiltrated into the insulating layer to form the intermediate layer **14** containing the insulating portions **141** made of Al_2O_3 and the magnetic metallic portions **142**. Instead of the ion treatment, the plasma treatment or the thermal treatment may be employed.

(4) Formation of Free Layer **15**, Protective Layer **16** and Top Electrode UE

[0062] Then, the free layer **15** is formed on the intermediate layer **14**, and the protective layer **16** and the top electrode UE are formed on the free layer **15**, thereby forming the magneto-resistance effect element **10**.

(5) Thermally Treatment

[0063] The magneto-resistance effect element **10** is thermally treated under magnetic field so that the direction of the magnetization of the first pinned layer **131** is fixed.

(Magnetic Head and Magnetic Recording/Reproducing Device)

[0064] The magneto-resistance effect element is installed in advance in an all-in-one magnetic head assembly allowing both the recording/reproducing, and mounted as the head assembly at the magnetic recording/reproducing device.

[0065] FIG. **6** is a perspective view illustrating the schematic structure of the magnetic recording/reproducing device. The magnetic recording/reproducing device **150** illustrated in FIG. **6** constitutes a rotary actuator type magnetic recording/reproducing device. In FIG. **6**, a magnetic recording disk **200** is mounted to a spindle **152** to be turned in the direction designated by the arrow A by a motor (not shown) which is driven in response to control signals from a drive unit controller (not shown). In FIG. **6**, the magnetic recording/reproducing apparatus **150** may be that provided with a single magnetic recording disk **200**, but with a plurality of magnetic recording disks **200**.

[0066] A head slider **153** recording/reproducing information to be stored in the magnetic recording disk **200** is mounted on a tip of a suspension **154** of a thin film type. The head slider **153** mounts at the tip the magnetic head containing the magnetic resistance effect element as described in above embodiments.

[0067] When the magnetic recording disk **200** is rotated, such a surface (ABS) of the head slider **153** as being opposite to the magnetic recording disk **200** is floated from on the main surface of the magnetic recording disk **200**. Alternatively, the slider may constitute a so-called "contact running type" slider such that the slider is in contact with the magnetic recording disk **200**.

[0068] The suspension **154** is connected to one edge of the actuator arm **155** with a bobbin portion supporting a driving coil (not shown) and the like. A voice coil motor **156** being a kind of a linear motor is provided at the other edge of the actuator arm **155**. The voice coil motor **156** is composed of the driving coil (not shown) wound around the bobbin portion of the actuator arm **155** and a magnetic circuit with a permanent magnet and a counter yoke which are disposed opposite to one another so as to sandwich the driving coil.

[0069] The actuator arm **155** is supported by ball bearings (not shown) provided at the upper portion and the lower portion of the spindle **157** so as to be rotated and slid freely by the voice coil motor **156**.

[0070] FIG. **7** is an enlarged perspective view illustrating a portion of the magnetic head assembly positioned at the tip side thereof from the actuator arm **155**, as viewed from the side of the magnetic recording disk **200**. As illustrated in

FIG. **7**, the magnetic head assembly **160** has the actuator arm **155** with the bobbin portion supporting the driving coil and the like. The suspension **154** is connected with the one edge of the actuator arm **155**.

[0071] Then, the head slider **153** with the magnetic head containing the magneto-resistance effect element as defined in above-embodiments is attached to the tip of the suspension **154**. The suspension **154** includes a lead wire **164** for writing/reading signals, where the lead wire **164** is electrically connected with the respective electrodes of the magnetic head embedded in the head slider **153**. In the drawing, reference numeral "**165**" denotes an electrode pad of the assembly **160**.

[0072] In the magnetic recording/reproducing device illustrated in FIGS. **6** and **7**, since the magneto-resistance effect element as described in the above embodiments is installed, the information magnetically recorded in the magnetic recording disk **200** under higher density recording than normal recording can be read out properly.

(Magnetic Memory)

[0073] The magneto-resistance effect element as described above can constitute a magnetic memory such as a magnetic random access memory (MRAM) where memory cells are arranged in matrix.

[0074] FIG. **8** is a view illustrating an embodiment of the magnetic memory matrix according to the present invention. This drawing shows a circuit configuration when the memory cells are arranged in an array. In order to select one bit in the array, a column decoder **350** and a line decoder **351** are provided, where a switching transistor **330** is turned ON by a bit line **334** and a word line **332** and to be selected uniquely, so that the bit information recorded in a magnetic recording layer (free layer) in the magneto-resistance effect film **10** can be read out by being detected by a sense amplifier **352**. In order to write the bit information, a writing current is flowed in a specific write word line **323** and a bit line **322** to generate a magnetic field for writing.

[0075] FIG. **9** is a view illustrating another embodiment of the magnetic memory matrix according to the present invention. In this case, a bit line **322** and a word line **334** which are arranged in matrix are selected by decoders **360**, **361**, respectively, so that a specific memory cell in the array is selected. Each memory cell is configured such that the magneto-resistance effect film **10** and a diode D is connected in series. Here, the diode D plays a role of preventing a sense current from detouring in the memory cell other than the selected magneto-resistance effect film **10**. A writing is performed by a magnetic field generated by flowing the writing current in the specific bit line **322** and the word line **323**, respectively.

[0076] FIG. **10** is a cross sectional view illustrating a substantial portion of the magnetic memory in an embodiment according to the present invention. FIG. **11** is a cross sectional view of the magnetic memory illustrated in FIG. **10**, taken on line "A-A". The configuration shown in these drawings corresponds to a 1-bit memory cell included in the magnetic memory shown in FIG. **8** or FIG. **9**. This memory cell includes a memory element part **311** and an address selection transistor part **312**.

[0077] The memory element part **311** includes the magneto-resistance effect film **10** and a pair of wirings **322**, **324** connected to the magneto-resistance effect film **10**. The magneto-resistance effect film **10** is the magneto-resistance effect element (CCP-CPP element) as described in the above embodiments.

[0078] Meanwhile, in the address selection transistor part **312**, a transistor **330** having connection therewith via a via **326** and an embedded wiring **328** is provided. The transistor **330** performs switching operations in accordance with voltages applied to a gate **332** to control the opening/closing of the current confining path between the magneto-resistance effect film **10** and the wiring **334**.

[0079] Further, below the magneto-resistance effect film **10**, a write wiring **323** is provided in the direction substantially orthogonal to the wiring **322**. These write wirings **322**, **323** can be formed of, for example, aluminum (Al), copper (Cu), tungsten (W), tantalnum (Ta) or an alloy containing any of these elements.

[0080] In the memory cell of such a configuration, when writing bit information into the magneto-resistance effect element **10**, a writing pulse current is flowed in the wirings **322**, **323**, and a synthetic magnetic field induced by the writing current is applied to appropriately invert the magnetization of a recording layer of the magneto-resistance effect element **10**.

[0081] Further, when reading out the bit information, a sense current is flowed through the magneto-resistance effect element **10** including the magnetic recording layer and a lower electrode **324** to measure a resistance value of or a fluctuation in the resistance values of the magneto-resistance effect element **10**.

[0082] The magnetic memory according to the embodiment can assure writing and reading by surely controlling the magnetic domain of the recording layer even though the cell is miniaturized in size, with the use of the magneto-resistance effect element according to the above-described embodiment.

EXAMPLES

[0083] The present invention will be described in detail in view of Examples.

Example 1

[0084] Example 1 relating to the magneto-resistance effect element **10** will be described. In Example 1, the magneto-resistance effect element **10** was formed as follows:

[0085] Underlayer **11**: Ta 5 nm/NiFeCr 7 nm

[0086] Antiferromagnetic layer **12**: PtMn 15 nm

[0087] First pinned layer **131**: Co_9Fe_1 3.3 nm

[0088] Magnetic antiparallel coupling layer **132**: Ru 0.9 nm

[0089] Second pinned layer **132**: Fe_5Co_5 2.5 nm/Cu 0.1 nm

[0090] The underlayer **11** through the second pinned layer **132** were subsequently formed. Then, the Al layer with a thickness of 0.9 nm was formed and oxidized under Ar ion atmosphere. Then, the ion treatment was carried out to form the multilayered structure of the intermediate layer **14**: the Al oxide/FeCo—Cu metallic layer. Then,

[0091] Free layer **15**: Fe_5Co_5 2.5 nm

[0092] Protective layer **16**: Cu 1 nm/Ta 2 nm/Ru 15 nm were formed.

[0093] The thus obtained magneto-resistance effect element **10** was thermally treated at 270° C. during ten hours under magnetic field. As a result, in Example 1, the RA of

the magneto-resistance effect element **10** was 0.5 $\Omega\mu m^2$. Then, the MR value was 200%, and the interlayer-coupling between the complex pinned layer **133** and the free layer **15** was 20 Oe.

Example 2

[0094] Example 2 relating to the magneto-resistance effect element **10** will be described. In Example 2, the magneto-resistance effect element **10** was formed as follows:

[0095] Underlayer **11**: Ta 5 nm/Ru 2 nm

[0096] Antiferromagnetic layer **12**: PtMn 15 nm

[0097] First pinned layer **131**: Co_9Fe_1 3.3 nm

[0098] Magnetic antiparallel coupling layer **132**: Ru 0.9 nm

[0099] Second pinned layer **132**: Fe_5Co_5 2.5 nm/Cu 0.1 nm

[0100] The underlayer **11** through the second pinned layer **132** were subsequently formed. Then, the Al layer with a thickness of 0.9 nm was formed and oxidized under Ar ion atmosphere. Then, the ion treatment was carried out to form the multilayered structure of the intermediate layer **14**: the Al oxide/FeCo—Cu metallic layer. Then,

[0101] Free layer **15**: Fe_5Co_5 2.5 nm

[0102] Protective layer **16**: Cu 1 nm/Ta 2 nm/Ru 15 nm

were formed.

[0103] The thus obtained magneto-resistance effect element **10** was thermally treated at 270° C. during ten hours under magnetic field. As a result, in Example 2, the RA of the magneto-resistance effect element **10** was 0.3 $\Omega\mu m^2$. Then, the MR value was 150%, and the interlayer-coupling between the complex pinned layer **133** and the free layer **15** was 25 Oe.

Example 3

[0104] Example 3 relating to the magneto-resistance effect element **10** will be described. In Example 3, the magneto-resistance effect element **10** was formed as follows:

[0105] Underlayer **11**: Ta 5 nm/NiFeCr 7 nm

[0106] Antiferromagnetic layer **12**: PtMn 15 nm

[0107] First pinned layer **131**: Co_9Fe_1 3.3 nm

[0108] Magnetic antiparallel coupling layer **132**: Ru 0.9 nm

[0109] Second pinned layer **132**: Fe_5Co_5 2.5 nm/Zr 0.1 nm

[0110] The underlayer **11** through the second pinned layer **132** were subsequently formed. Then, the Al layer with a thickness of 0.9 nm was formed and oxidized under Ar ion atmosphere. Then, the ion treatment was carried out to form the multilayered structure of the intermediate layer **14**: the Al oxide/FeCo—Zr metallic layer. Then,

[0111] Free layer **15**: Fe_5Co_5 2.5 nm

[0112] Protective layer **16**: Cu 1 nm/Ta 2 nm/Ru 15 nm

were formed.

[0113] The thus obtained magneto-resistance effect element **10** was thermally treated at 270° C. during ten hours under magnetic field. As a result, in Example 3, the RA of the magneto-resistance effect element **10** was 0.5 $\Omega\mu m^2$. Then, the MR value was 180%, and the interlayer-coupling between the complex pinned layer **133** and the free layer **15** was 23 Oe.

Example 4

[0114] Example 4 relating to the magneto-resistance effect element **10** will be described. In Example 4, the magneto-resistance effect element **10** was formed as follows:

[0115] Underlayer **11**: Ta 5 nm/Ru 2 nm

[0116] Antiferromagnetic layer **12**: PtMn 15 nm

[0117] First pinned layer **131**: Co_9Fe_1 3.3 nm

[0118] Magnetic antiparallel coupling layer **132**: Ru 0.9 nm

[0119] Second pinned layer **132**: Fe_5Co_5 2.5 nm/Zr 0.1 nm

[0120] The underlayer **11** through the second pinned layer **132** were subsequently formed. Then, the Al layer with a thickness of 0.9 nm was formed and oxidized under Ar ion atmosphere. Then, the ion treatment was carried out to form the multilayered structure of the intermediate layer **14**: the Al oxide/FeCo—Zr metallic layer. Then,

[0121] Free layer **15**: Fe_5Co_5 2.5 nm

[0122] Protective layer **16**: Cu 1 nm/Ta 2 nm/Ru 15 nm

were formed.

[0123] The thus obtained magneto-resistance effect element **10** was thermally treated at 270° C. during ten hours under magnetic field. As a result, in Example 4, the RA of the magneto-resistance effect element **10** was 0.4 $\Omega\mu m^2$. Then, the MR value was 120%, and the interlayer-coupling between the complex pinned layer **133** and the free layer **15** was 28 Oe.

Example 5

[0124] Example 5 relating to the magneto-resistance effect element **10** will be described. In Example 5, the magneto-resistance effect element **10** was formed as follows:

[0125] Underlayer **11**: Ta 5 nm/NiFeCr 7 nm

[0126] Antiferromagnetic layer **12**: PtMn 15 nm

[0127] First pinned layer **131**: Co_9Fe_1 3.3 nm

[0128] Magnetic antiparallel coupling layer **132**: Ru 0.9 nm

[0129] Second pinned layer **132**: Fe_5Co_5 2.5 nm/Cu 0.2 nm

[0130] The underlayer **11** through the second pinned layer **132** were subsequently formed. Then, the Al layer with a thickness of 0.9 nm was formed and oxidized under Ar ion atmosphere. Then, the ion treatment was carried out to form the multilayered structure of the intermediate layer **14**: the Al oxide/FeCo—Cu metallic layer. Then,

[0131] Free layer **15**: Fe_5Co_5 2.5 nm

[0132] Protective layer **16**: Cu 1 nm/Ta 2 nm/Ru 15 nm

were formed.

[0133] The thus obtained magneto-resistance effect element **10** was thermally treated at 270° C. during ten hours under magnetic field. As a result, in Example 5, the RA of the magneto-resistance effect element **10** was 0.5 $\Omega\mu m^2$.

Then, the MR value was 220%, and the interlayer-coupling between the complex pinned layer **133** and the free layer **15** was 15 Oe.

Example 6

[0134] Example 6 relating to the magneto-resistance effect element **10** will be described. In Example 6, the magneto-resistance effect element **10** was formed as follows:

[0135] Underlayer **11**: Ta 5 nm/NiFeCr 7 nm

[0136] Antiferromagnetic layer **12**: PtMn 15 nm

[0137] First pinned layer **131**: Co_9Fe_1 3.3 nm

[0138] Magnetic antiparallel coupling layer **132**: Ru 0.9 nm

[0139] Second pinned layer **132**: $(Fe_5CO_5)_{0.9}Cu_{0.1}$ 2.5 nm

[0140] The underlayer **11** through the second pinned layer **132** were subsequently formed. Then, the Al layer with a thickness of 0.9 nm was formed and oxidized under Ar ion atmosphere. Then, the ion treatment was carried out to form the multilayered structure of the intermediate layer **14**: the Al oxide/FeCo—Cu metallic layer. Then,

[0141] Free layer **15**: Fe_5Co_5 2.5 nm

[0142] Protective layer **16**: Cu 1 nm/Ta 2 nm/Ru 15 nm were formed.

[0143] The thus obtained magneto-resistance effect element **10** was thermally treated at 270° C. during ten hours under magnetic field. As a result, in Example 6, the RA of the magneto-resistance effect element **10** was 0.5 $\Omega\mu m^2$. Then, the MR value was 230%, and the interlayer-coupling between the complex pinned layer **133** and the free layer **15** was 18 Oe.

[0144] In Examples, the second pinned layer **133** contains Cu or Zr, but may contain another non-magnetic metal such as Cr, V, Ta, Nb, Sc, Ti, Mn, Zn, Ga, Ge, Y, Tc, Re, B, In, C, Si, Sn, Ca, Sr, Ba, Au, Ag, Pd, Pt, Ir, Rh, Ru, Os or Hf. In these cases using the non-magnetic metal except Cu or Zr, the same effects as in Examples were obtained. Namely, according to the magneto-resistance effect element of to the present invention, the interlayer-coupling between the complex pinned layer and the free layer can be suppressed and the relatively large MR value can be obtained.

[0145] Although the present invention was described in detail with reference to the above examples, this invention is not limited to the above disclosure and every kind of variation and modification may be made without departing from the scope of the present invention.

[0146] In the application of the magneto-resistance effect element to a reproducing magnetic head, if a top and bottom shields are added to the magneto-resistance effect element, the detecting resolution of the magnetic head can be defined.

[0147] Moreover, the magneto-resistance effect element can be applied for both of a longitudinal magnetic recording type magnetic head and a vertical magnetic recording type magnetic recording type magnetic head. Also, the magneto-resistance effect element can be applied for both of a longitudinal magnetic recording/reproducing device and a vertical magnetic recording/reproducing device.

[0148] The magnetic recording/reproducing device may be a so-called stationary type magnetic device where a specific recording medium is installed therein or a so-called removable type magnetic device where a recording medium can be replaced.

What is claimed is:

1. A magneto-resistance effect element, comprising:

a first magnetization layer of which a magnetization is substantially fixed in one direction;

a second magnetization layer of which a magnetization is rotated in accordance with an external magnetic field;

an intermediate layer which contains insulating portions and magnetic metallic portions and which is provided between the said first magnetic layer and said second magnetic layer; and

a pair of electrodes to flow current in a direction perpendicular to a film surface of a multilayered film made of said first magnetic layer, said intermediate layer and said second magnetic layer,

wherein said magnetic metallic portions of said intermediate layer contain non-ferromagnetic metal.

2. The magneto-resistance effect element as set forth in claim **1**,

wherein said non-ferromagnetic metal is at least one selected from the group consisting of Cu, Cr, V, Ta, Nb, Sc, Ti, Mn, Zn, Ga, Ge, Zr, Y, Tc, Re, B, In, C, Si, Sn, Ca, Sr, Ba, Au, Ag, Pd, Pt, Ir, Rh, Ru, Os and Hf.

3. The magneto-resistance effect element as set forth in claim **2**,

wherein said non-ferromagnetic metal contains at least Cu.

4. The magneto-resistance effect element as set forth in claim **1**,

wherein said insulating portions of said intermediate layer contain a compound containing at least one of oxygen, nitrogen and carbon.

5. The magneto-resistance effect element as set forth in claim **1**,

wherein said magnetic metallic portions of said intermediate layer contain at least one of Fe, Co and Ni.

6. The magneto-resistance effect element as set forth in claim **1**,

wherein said first magnetic layer and said second magnetic layer contain at least one of Fe, Co and Ni.

7. The magneto-resistance effect element as set forth in claim **1**,

wherein said intermediate layer suppresses an interlayer-coupling between said first magnetic layer and said second magnetic layer.

8. The magneto-resistance effect element as set forth in claim **1**,

wherein in said intermediate layer, magnetic domain walls formed in said magnetic metallic portions are narrowed to enhance an MR effect of said magneto-resistance effect element.

9. A magnetic head comprising a magneto-resistance effect element as set forth in claim **1**.

10. A magnetic recording/reproducing device comprising a magnetic recording medium and a magnetic head as set forth in claim **1**.

11. A magnetic memory comprising a magneto-resistance effect element as set forth in claim **1**.

12. A method for manufacturing a magneto-resistance effect element, comprising:

forming a first magnetization layer of which a magnetization is substantially fixed in one direction;

forming a first metallic layer as magnetic metallic portions on said first magnetization layer;

forming a second metallic layer on said first metallic layer;

applying energy enough to excite atoms onto said second metallic layer and then, oxidizing said second metallic layer to convert said second metallic layer into insulating portions, thereby forming an intermediate layer which contains said insulating portions and said magnetic metallic portions;

forming a second magnetization layer of which a magnetization is rotated in accordance with an external magnetic field; and

forming a pair of electrodes to flow current in a direction perpendicular to a film surface of a multilayered film made of said first magnetic layer, said intermediate layer and said second magnetic layer.

13. A method for manufacturing a magneto-resistance effect element, comprising:

forming a first magnetization layer of which a magnetization is substantially fixed in one direction;

forming a first metallic layer as magnetic metallic portions on said first magnetization layer;

forming a second metallic layer on said first metallic layer;

oxidizing said second metallic layer to convert said second metallic layer into insulating portions and then, applying energy enough to excite atoms onto said insulating portions, thereby forming an intermediate layer which contains said insulating portions and said magnetic metallic portions;

forming a second magnetization layer of which a magnetization is rotated in accordance with an external magnetic field; and

forming a pair of electrodes to flow current in a direction perpendicular to a film surface of a multilayered film made of said first magnetic layer, said intermediate layer and said second magnetic layer.

* * * * *