US 20060261663A1

(19) **United States**

(12) **Patent Application Publication**

(10) **Pub. No.: US 2006/0261663 A1**

(43) **Pub. Date: Nov. 23, 2006**

Sollami

(54) **SPRING LOCK MECHANISM FOR A GROUND-ENGAGING**

(76) Inventor: **Jimmie L. Sollami**, Herrin, IL (US)

Correspondence Address:
PITTS AND BRITTIAN P C
P O BOX 51295
KNOXVILLE, TN 37950-1295 (US)

(21) Appl. No.: **11/371,557**

(22) Filed: **Mar. 9, 2006**

Related U.S. Application Data

(63) Continuation-in-part of application No. 11/132,781, filed on May 19, 2005.

Publication Classification

(51) **Int. Cl.**
E21C 25/10 (2006.01)

(52) **U.S. Cl.** **299/104**

(57) **ABSTRACT**

A spring lock mechanism for a ground-engaging tool, or bit. The spring lock mechanism is provided for engaging a bit into a positive engagement with a bit holder, thereby reducing the failure rate of the bit while also allowing the bit to rotate within the bit block. The spring lock mechanism is configured to be received about the shank of a bit between a support block and a retainer. The spring lock mechanism defines a frustoconical configuration having a selected inside diameter, outside diameter, and uncompressed height. The spring lock mechanism is fabricated from a resilient material to allow it to compress. When compressed, the spring lock mechanism biases the bit into the support block receptor.

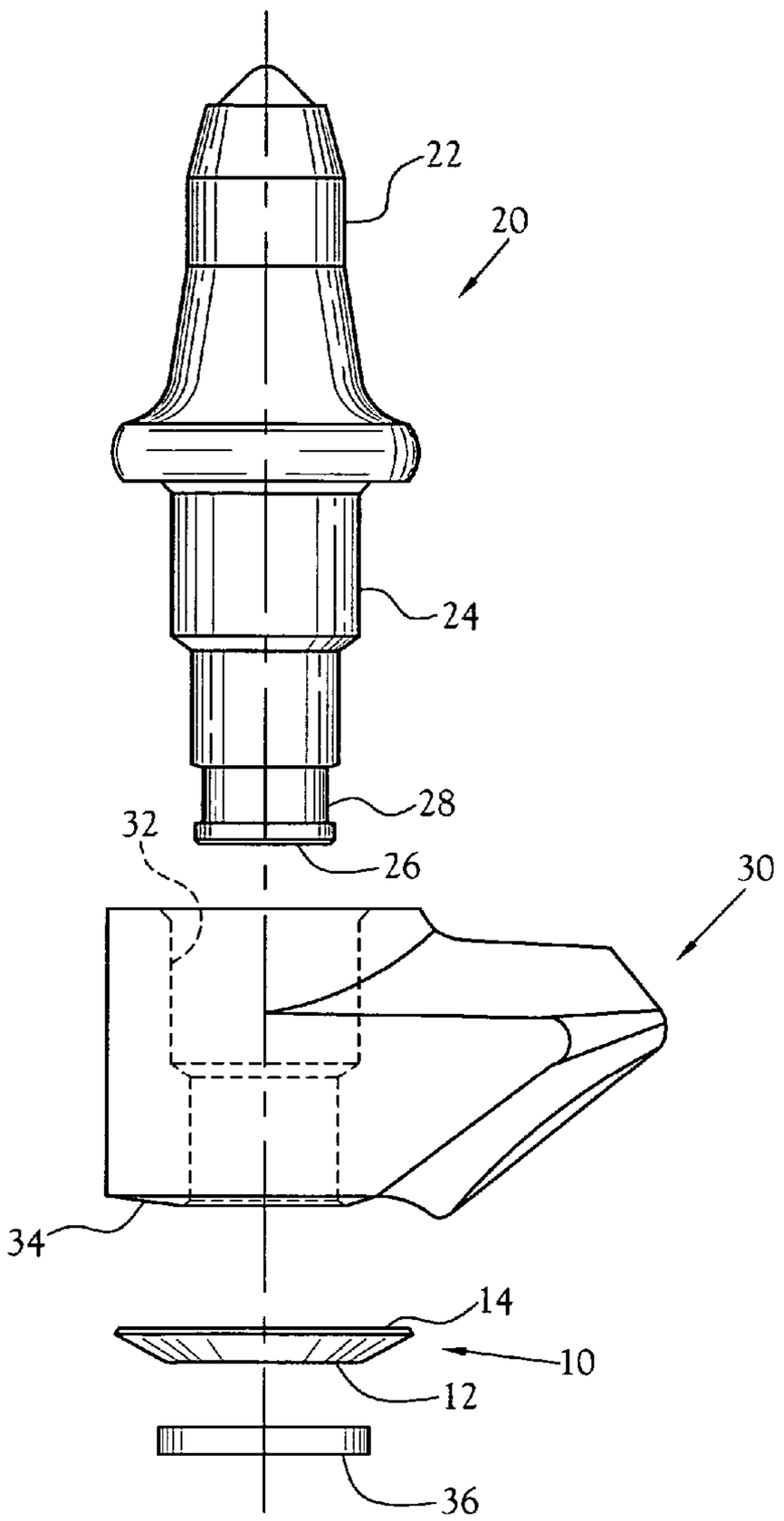

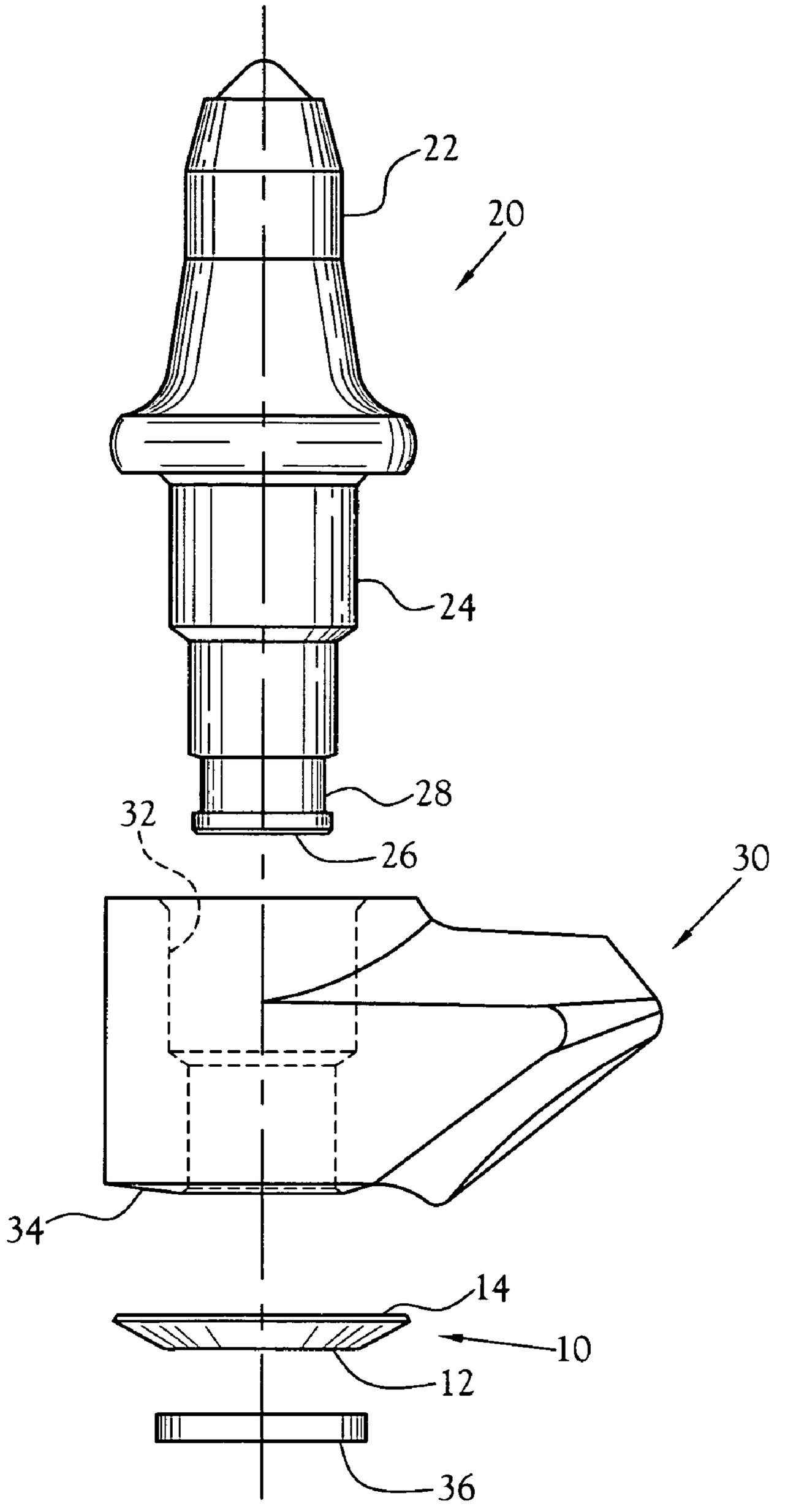

Fig. 1

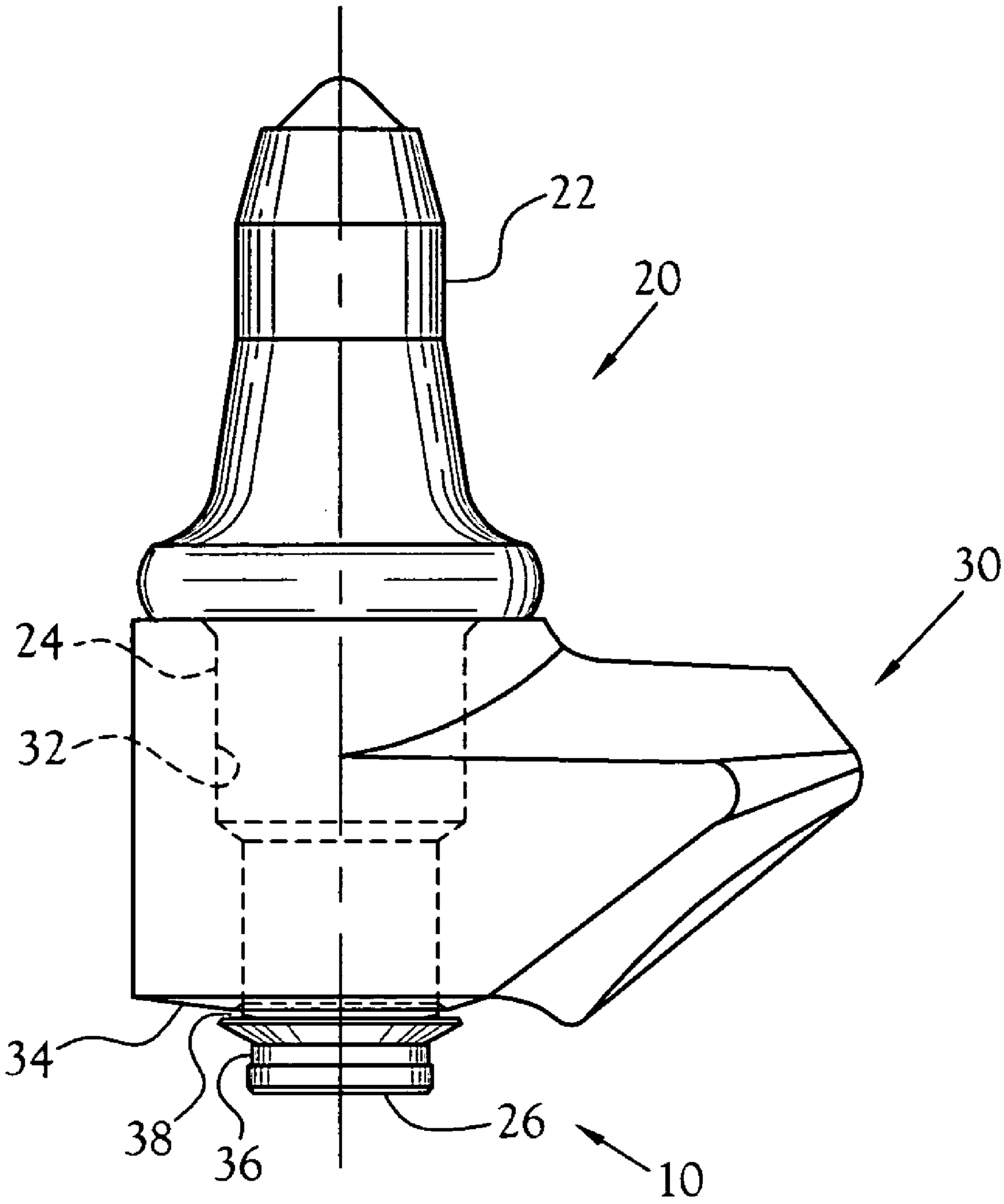

Fig.1A

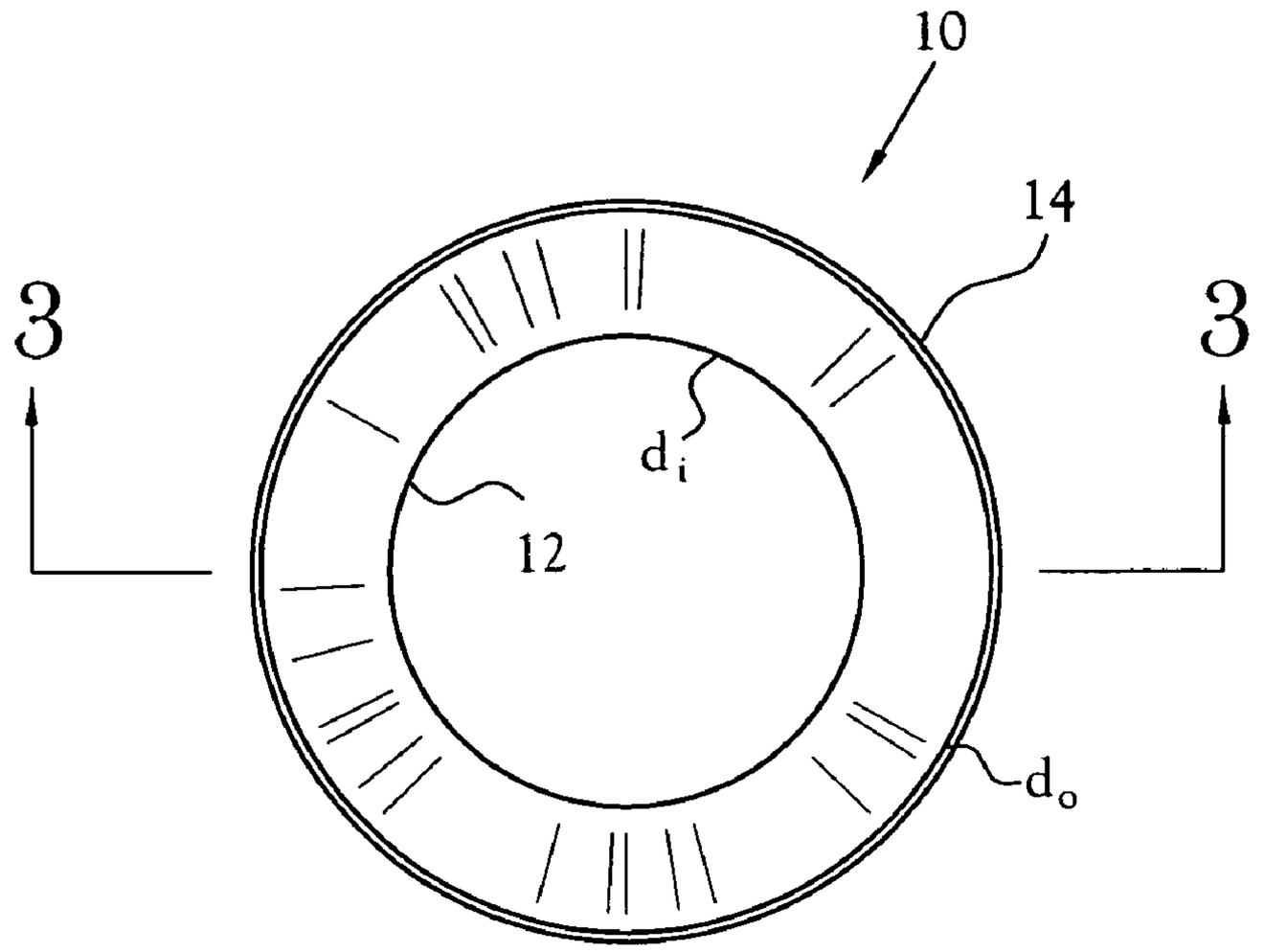

Fig.2

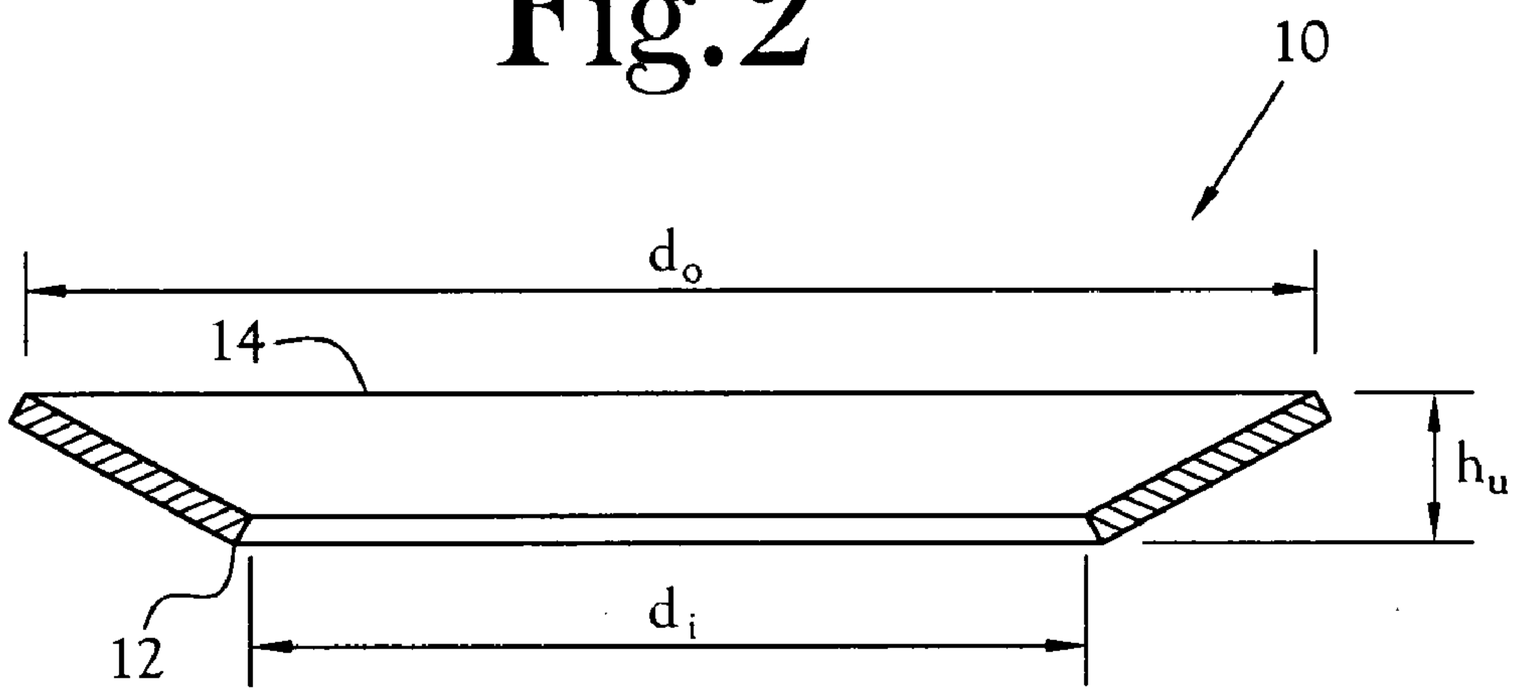

Fig.3A

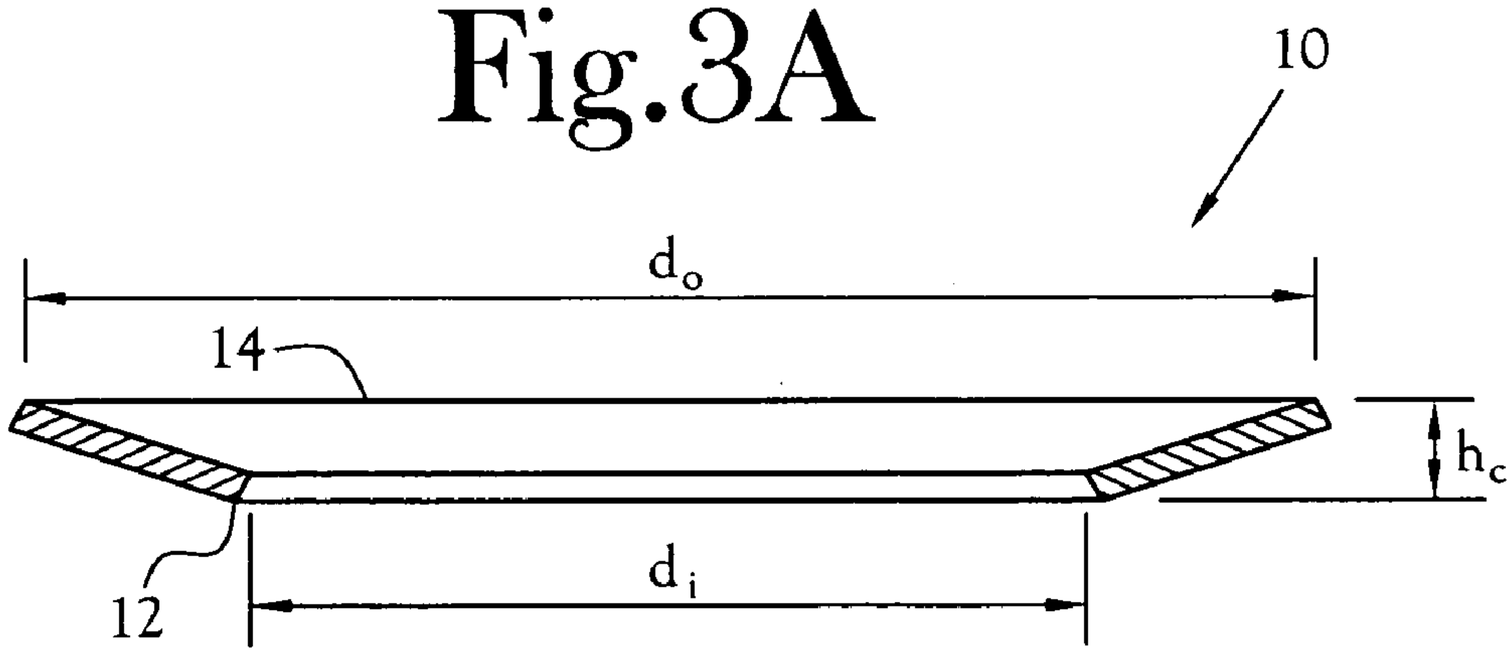

Fig.3B

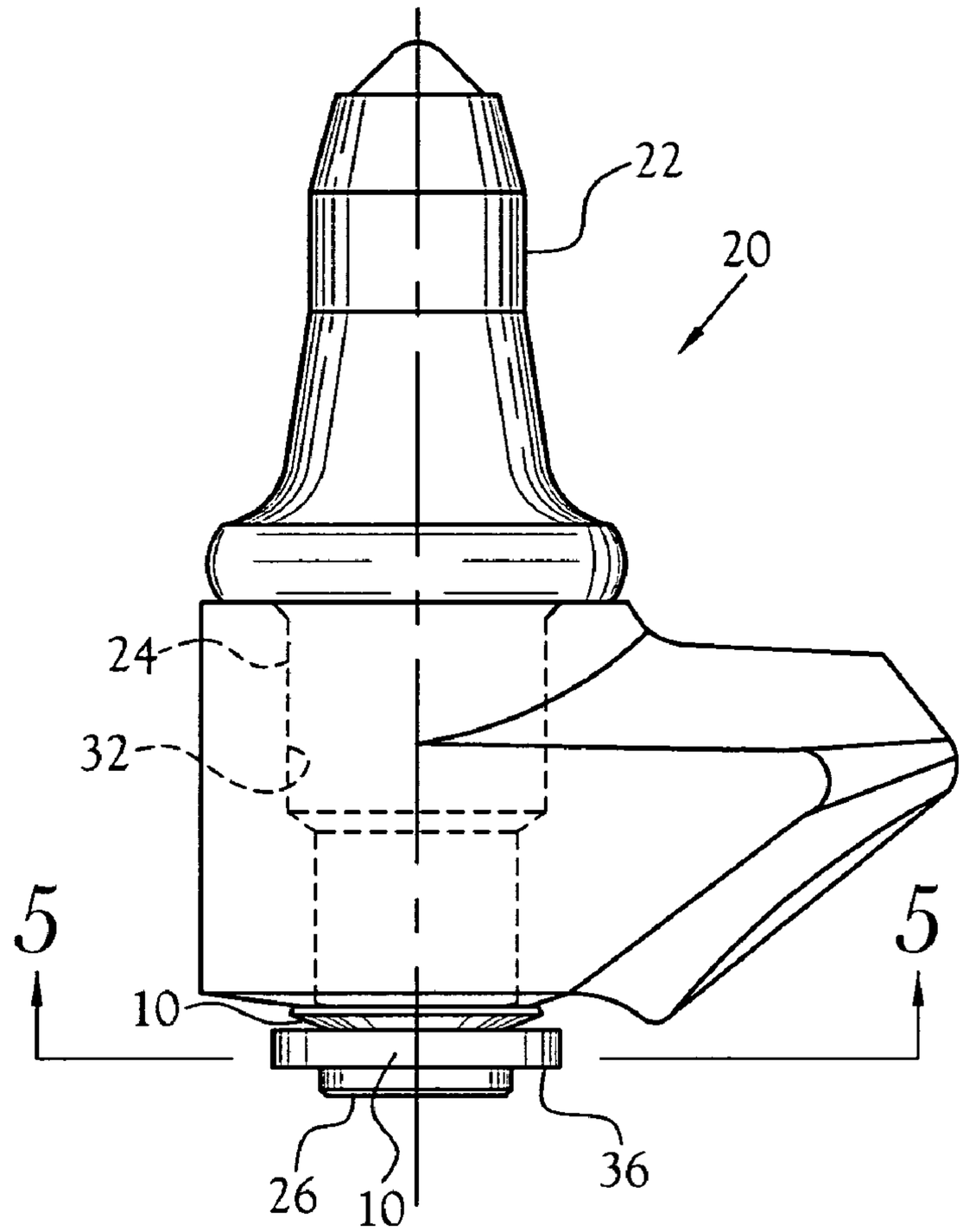

Fig.4

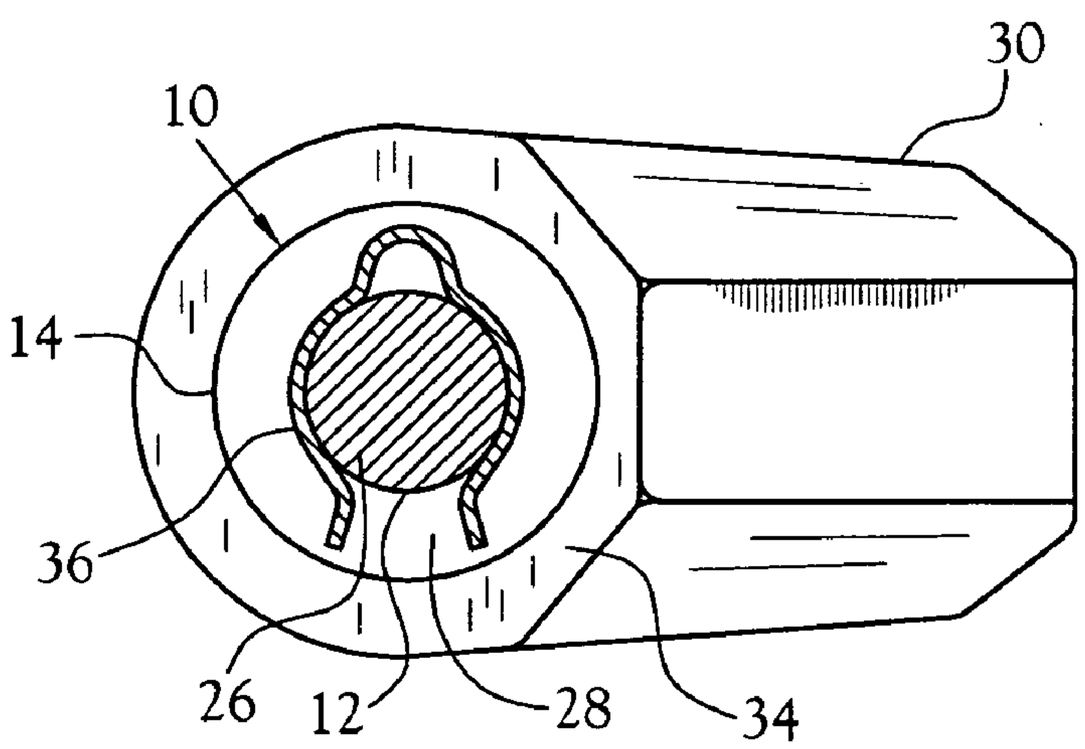

Fig.5

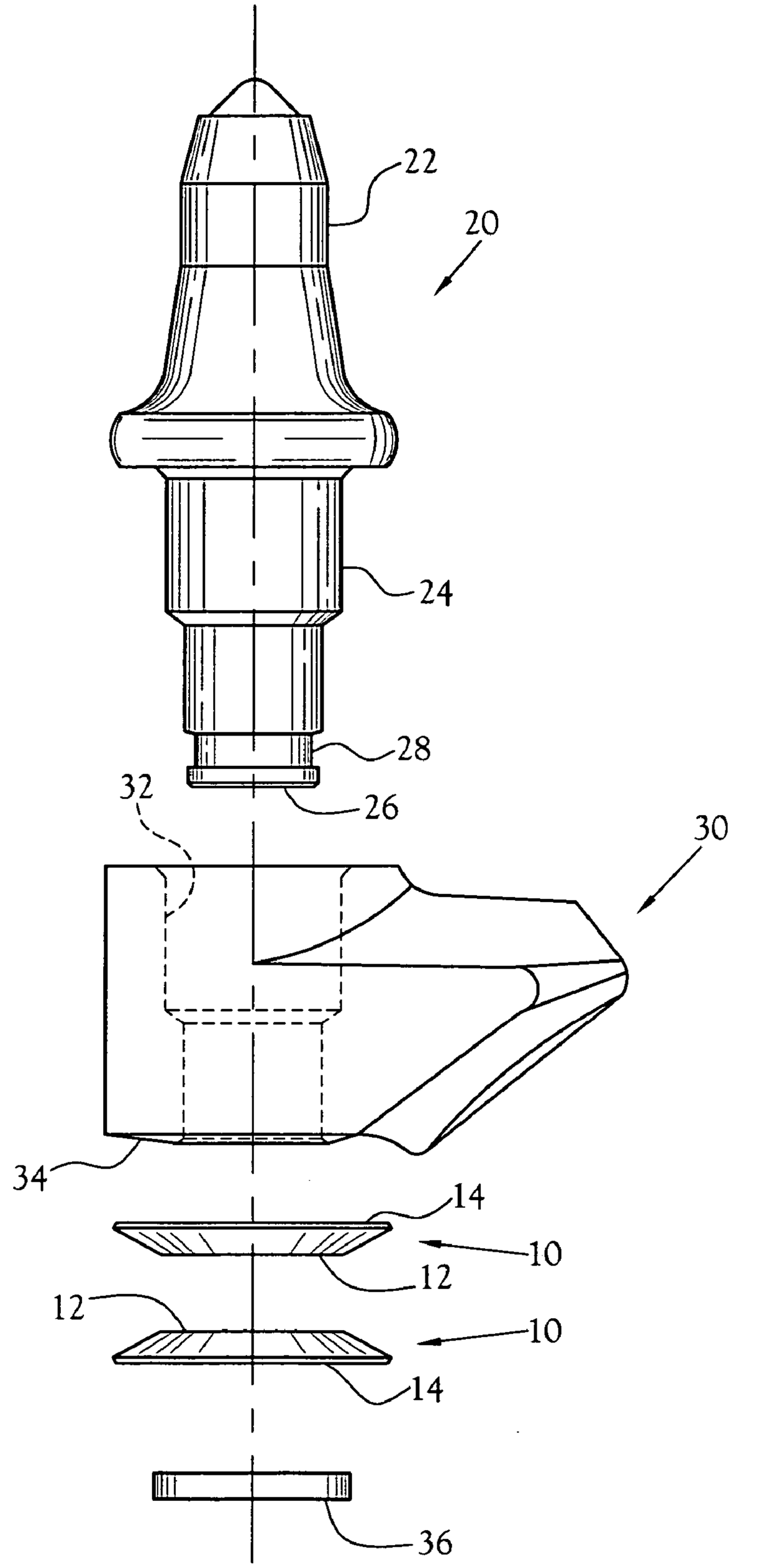

Fig.6

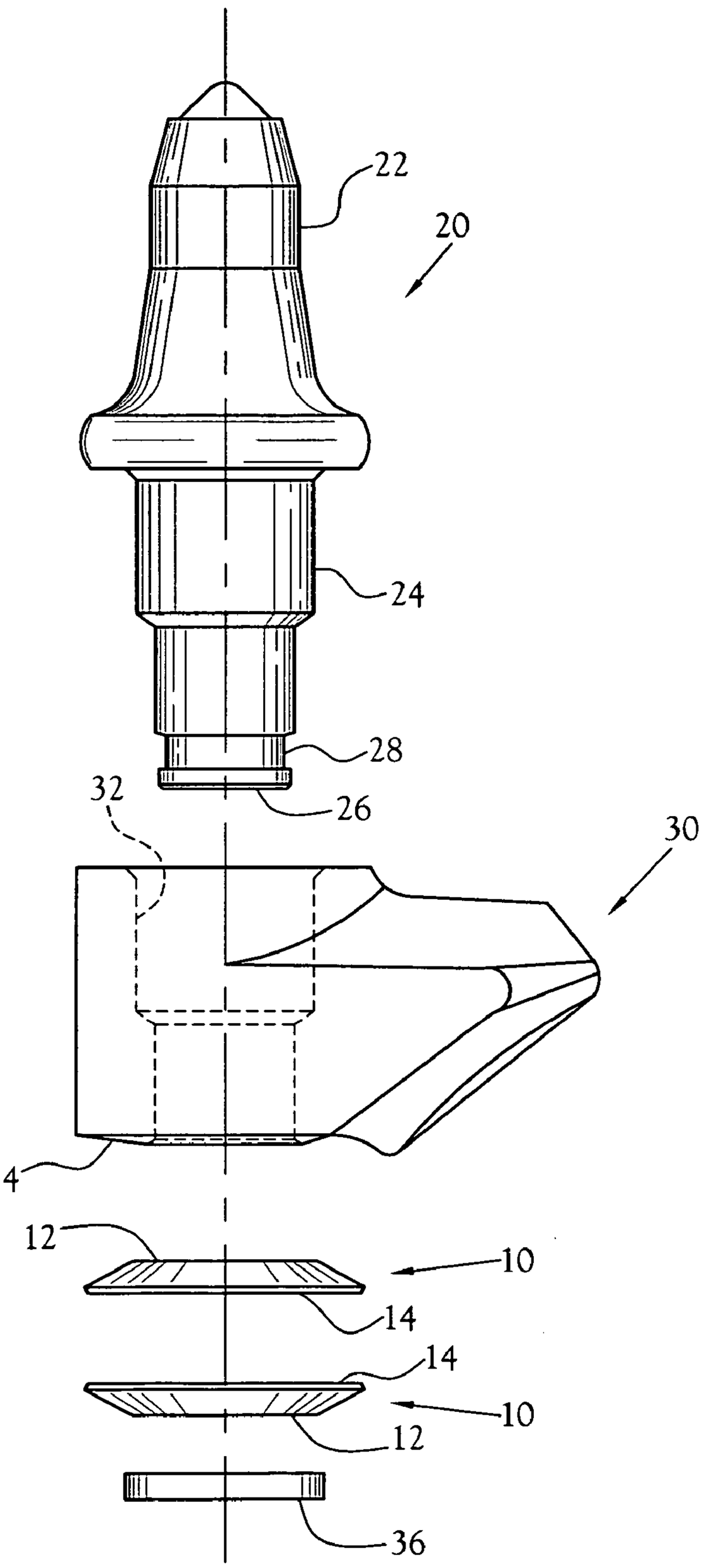

Fig.7

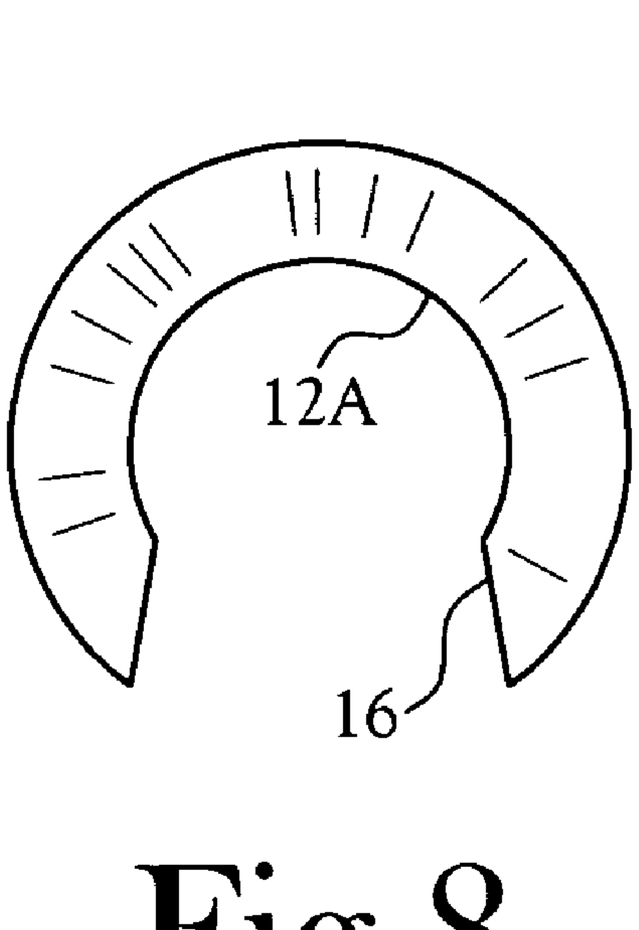

Fig.8

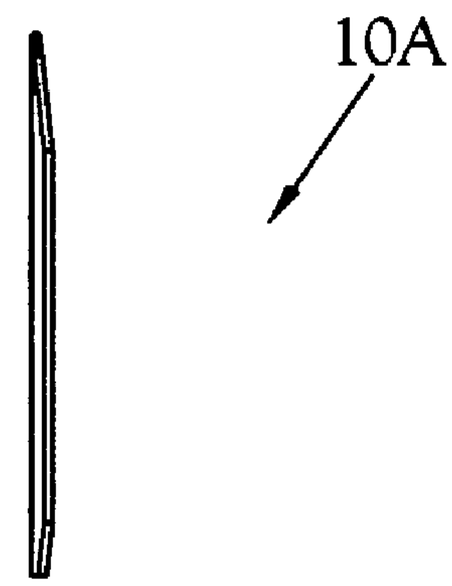

Fig.9

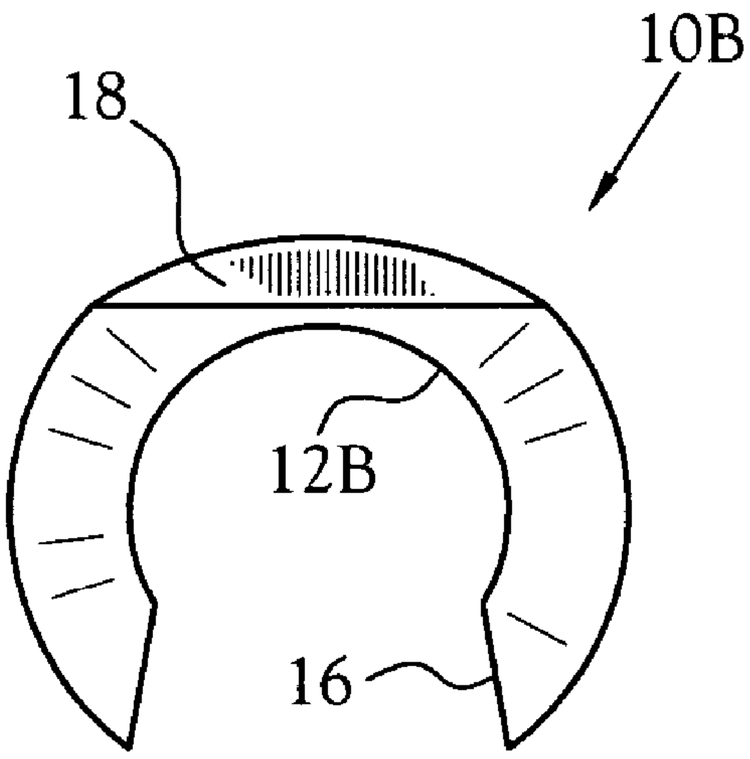

Fig.10

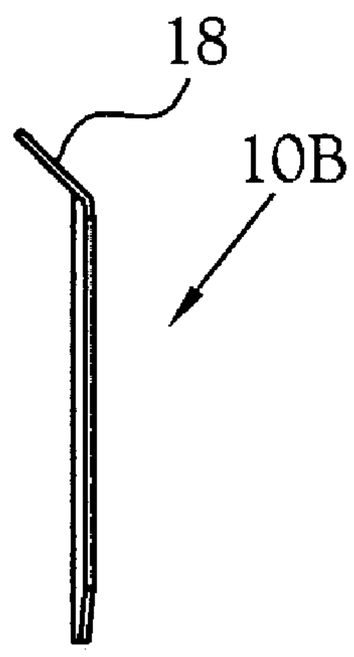

Fig.11

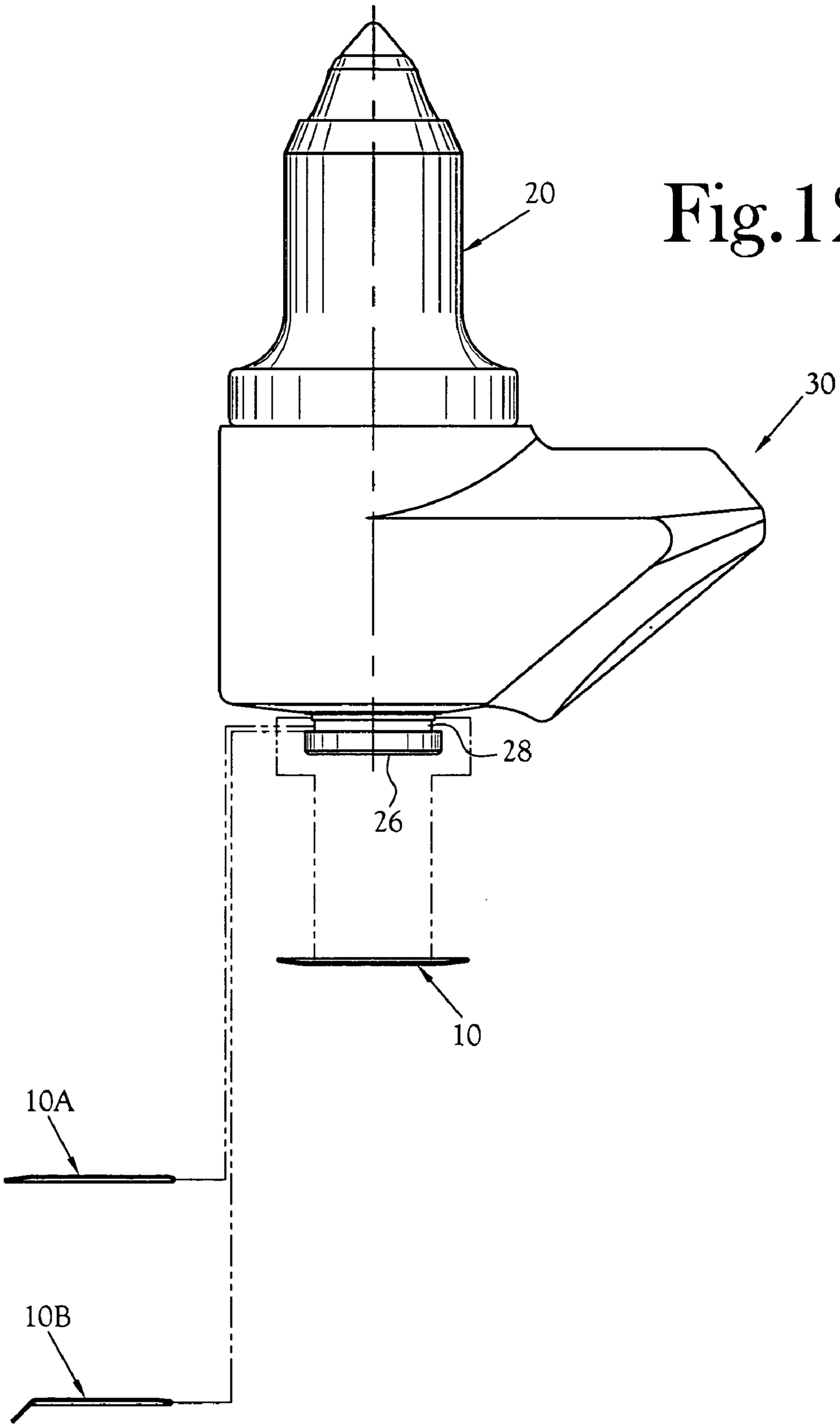

Fig.12

SPRING LOCK MECHANISM FOR A GROUND-ENGAGING

CROSS-REFERENCE TO RELATED APPLICATIONS

[0001] This is a continuation-in-part of application Ser. No. 11/132,781, filed May 19, 2005.

STATEMENT REGARDING FEDERALLY SPONSORED RESEARCH OR DEVELOPMENT

[0002] Not Applicable

BACKGROUND OF THE INVENTION

[0003] 1. Field of Invention

[0004] The present invention pertains to the field of earth working equipment. More particularly, the present invention is related to a spring lock mechanism for reducing axial movement of a ground-engaging tool or bit within a bit holder block.

[0005] 2. Description of the Related Art

[0006] In the field of earthworking, various types of equipment are used in various applications. Equipment varies from trenchers using chain excavation lines to rotatable drum equipment used for excavating rock, highly compressed earth, and mining materials. A plurality of ground-engaging tools, or bits, is attached to each of these machines for engaging and penetrating into the material being excavated.

[0007] Prior to the use of bits the equipment was provided with a plurality of teeth that would eventually wear and need replacing. In order to reduce the time and cost of replacing these teeth, bits were introduced. As is known in the art, bits typically include a bit insert made of a harder, more durable material than that of the bit or holder, thereby increasing the life of the bit. Typically, tungsten carbide is used.

[0008] Since their introduction, there have been several ways devised for mounting the bits. Initially the bits were welded to the equipment. However, holders or pockets were eventually introduced. In so doing, the bits have become more easily interchangeable after being worn or broken. In some circumstances, it has also made the bits more effective. Of primary structural note is that the bits have been allowed to rotate within a socket or receptacle defined by the bit mounting block. This has increased the useful life of the bits. To transfer force from the mounting block to the tool, the tool is provided with an annular flange having a planar rear surface which rests upon the planar forward surface of the mounting block surrounding the aperture such that the rear surface of the flange applies force to the forward surface of the mounting block.

[0009] In those embodiments where the bit is permitted to rotate within the bit block, axial movement of the bit within the bit mounting block is also permitted to at least a limited extent. As a result of such axial movement, the bits have a higher tendency to fail as compared to bits that are welded onto the earthworking equipment. Specifically, movement of the bit shank within the bit mounting block causes wear within the block, thereby increasing the opening in the block and therefore the wobbling of the bit. As this occurs, dust, dirt, mud and rock eventually build up in the mounting block. While the bit is rotating, centrifugal force pulls the bit further from the mounting block, causing an increased risk of breaking the shank. This is a result of the force being applied to the shank as opposed to the flange. The effects of the movement of the bit within the block are cumulative, causing early failure of both the bit and the bit mounting block.

[0010] Typical of the art are those devices disclosed in the following U.S. Pat. Nos:

Patent No.	Inventor(s)	Issue Date
3,830,546	T. J. Kniff	Aug. 20, 1974
3,833,264	G. W. Elders	Sep. 3, 1974
3,841,708	T. J. Kniff et al.	Oct. 15, 1974
4,065,185	G. W. Elders	Dec. 27, 1977
4,247,150	H. Wrulich et al.	Jan. 27, 1981
4,316,636	J. A. Taylor et al.	Feb. 23, 1982
4,342,486	M. L. O'Neill	Aug. 3, 1982
4,711,504	R. Berchem	Dec. 8, 1987
4,736,533	C. R. May et al.	Apr. 12, 1988
5,067,775	M. D. D'Angelo	Nov. 26, 1991
5,230,548	P. W. Southern	Jul. 27, 1993
6,000,153	J. L. Sollami	Dec. 14, 1999

[0011] Of these patents, Kniff, in his '546 patent, discloses a mining tool and support block for retaining the mining tool. The tool includes a shank having a circular cross-section such that it is rotatable within the support block. The distal end of the shank defines a radial groove for receiving a retainer in the form of a snap ring, the retainer being provided for preventing unselected removal of the tool from the support block. In order to allow for rotation of the tool, the retained is spaced apart from the support block when the tool is fully inserted therein. This is similar to the construction disclosed by Kniff et al. ('708), Elders ('185), and Bercham ('504), as well.

[0012] Other devices of the prior art define similar mechanisms for securing a bit within a support block. Elders, in his '264 patent, discloses a bit having a shank defining an annular groove in its distal end. The mounting block carries a rubber insert, through which is received a locking pin. The locking pin defines a pointed distal end configured to engage the annular groove defined by the bit shank.

[0013] In the '150 patent, H. Wrulich et al., teach a similar bit held in the mounting block with a spring clip inserted into the annular groove. This spring clip defines a C-shaped configuration having an opening for receiving the annular groove of the bit shank. Further, the clip defines a curvature for encouraging the bit shank into the mounting block to prevent fluttering of the bit. It is seen that the spring clip engages the bit shank annular groove at two points, and the bit holder at a single point.

[0014] Taylor et al., in the '636 patent, disclose an expansible clip configured to be received within an annular groove defined by the bit shank, and within the receptacle of the mounting block. In this embodiment, an annular groove is defined within the mounting block receptacle, and is configured to receive a plurality of protrusions defined by the expansible clip. Thus, the expansible clip serves to selectively retain the bit within the mounting block receptacle. This configuration is similar to mounting devices disclosed

by May et al. ('533) and in the '153 patent issued to the inventor of the present invention.

[0015] In the '486 patent issued to O'Neill, a locking means which appears to be in the form of a torsion spring is used to maintain the bit within the mounting block. While there is no specific discussion of the structure or function of the locking means, it appears to define a pair of tabs which are engaged to enlarge the diameter of the locking means in order to facilitate application on and removal from an annular groove defined in the distal end of the bit shank.

[0016] Southern, in his '548 patent, discloses a cutter drum having a sump ring and a plurality of vanes, each defining holes for receiving and removably mounting cutting bits for cutting material to be mined. Retaining blocks are removably mounted in the vanes or sump ring for engaging a base portion of the cutting bit and retaining the cutting bit in the cutting drum. In the illustrated embodiment of the '548 device, the cutting bits are allowed limited axial movement within the holes.

[0017] Finally, D'Angelo, in his '775 patent, discloses a retainer for rotatable bits. The '775 retainer includes a removable collar consisting of at least two semi-annular members each having a flange extending from its inside diameter and a groove disposed about its outside diameter. The removable collar is circumferentially mountable about a rearward portion of either the mining tool or the wear resistant sleeve extending from the support block when mounted therein. The extending rearward portion has a groove circumferentially disposed therein. When the semi-annular members are mated thereabout, the flange of each member cooperates with the groove in the rearward portion of either the mining tool or the wear resistant sleeve. The groove about each semi-annular member defines in combination a substantially continuous groove about the collar. A snap ring is removably mounted in the substantially continuous groove about the removable collar.

BRIEF SUMMARY OF THE INVENTION

[0018] The present invention is a spring lock mechanism for an earthworking bit. The spring lock mechanism is provided for engaging an earthworking bit, or bit, into a positive engagement with a bit holder, thereby reducing the failure rate of the bit while also allowing the bit to rotate within the bit block.

[0019] The bit used in association with the present invention includes a body which defines a bit and a shank. The shank is adapted to be received within a receptor defined by a support block. The bit and the support block receptor are cooperatively configured such that when the bit is inserted into the support block receptor, the bit is permitted to rotate within the receptor. When the shank is fully inserted into the receptor, a distal end of the shank is extended from the receptor. The distal end of the shank defines a radial groove adapted to receive a retainer. The radial groove is disposed on the shank distal end such that it is exposed when the shank is fully inserted into the support block receptor. A retainer is received within the radial groove for preventing unselected removal of the bit from the support block.

[0020] At least one spring lock mechanism is provided. Each spring lock mechanism is configured to be received about the shank between the support block and the retainer. The spring lock mechanism defines a frustoconical configuration having a selected inside diameter, outside diameter, and uncompressed height. The spring lock mechanism defines an upper end at the inside diameter, and a lower end at the outside diameter. The spring lock mechanism is fabricated from a resilient material to allow it to compress. When compressed, the spring lock mechanism defines a compressed height. However, when the retainer is removed, the spring lock mechanism returns to its uncompressed height. The spring lock mechanism is configured in a preferred embodiment whereby it is received on the shank in an uncompressed state, whereby the shank is allowed a minimal amount of movement along its longitudinal axis.

BRIEF DESCRIPTION OF THE SEVERAL VIEWS OF THE DRAWINGS

[0021] The above-mentioned features of the invention will become more clearly understood from the following detailed description of the invention read together with the drawings in which:

[0022] **FIG. 1** is an exploded view of the spring lock mechanism of the present invention shown in association with a bit, support block, and retainer;

[0023] **FIG. 1A** is an assembled view of the spring lock mechanism, bit, support block, and retainer of **FIG. 1**, wherein the spring lock mechanism is not compressed, and a gap is defined between the spring lock mechanism and the support block;

[0024] **FIG. 2** is a top plan view of the spring lock mechanism of **FIG. 1**;

[0025] **FIG. 3A** is a cross-sectional view of the spring lock mechanism, taken along **3-3** in **FIG. 2**, the spring lock mechanism being shown in an uncompressed state;

[0026] **FIG. 3B** is a cross-sectional view of the spring lock mechanism, taken along **3-3** in **FIG. 2**, the spring lock mechanism being shown in a compressed state;

[0027] **FIG. 4** is an assembled view of the various elements depicted in **FIG. 1**;

[0028] **FIG. 5** is an end view, in section taken along **5-5** of **FIG. 4**;

[0029] **FIG. 6** is an exploded view of an alternate assembly using two of the spring lock mechanisms of the present invention shown in association with a bit, support block, and retainer, wherein the two spring lock mechanisms are oriented such that the respective upper ends are engaged;

[0030] **FIG. 7** is an exploded view of an alternate assembly using two of the spring lock mechanisms of the present invention shown in association with a bit, support block, and retainer, wherein the two spring lock mechanisms are oriented such that the respective lower ends are engaged;

[0031] **FIG. 8** is a top plan view of an alternate embodiment of a spring lock mechanism incorporating various features of the present invention;

[0032] **FIG. 9** is a side elevation view of the spring lock mechanism of **FIG. 8**;

[0033] **FIG. 10** is a top plan view of a further alternate embodiment of a spring lock mechanism incorporating various features of the present invention;

[0034] **FIG. 11** is a side elevation view of the spring lock mechanism of **FIG. 10**; and

[0035] **FIG. 12** is an exploded view of an assembly using one spring lock mechanism of **FIG. 2**, one spring lock mechanism of **FIG. 8**, and one spring lock mechanism of **FIG. 10** in combination and in association with a bit, support block, and retainer.

DETAILED DESCRIPTION OF THE INVENTION

[0036] A spring lock mechanism for an earthworking bit is disclosed. The spring lock mechanism is illustrated in the Figures generally at **10**. The spring lock mechanism **10** is provided for engaging an earthworking bit, or bit **20**, into a positive engagement with a bit holder, or support block **30**, thereby reducing the failure rate of the bit **20** while also allowing the bit **20** to rotate within the support block **30**.

[0037] As illustrated in **FIG. 1**, the bit **20** used in association with the present invention includes a body which defines a bit **22** and a shank **24**. The shank **24** is adapted to be received within a receptor **32** defined by a holder, or support block **30**, carried by an implement of earth working equipment such as the chain excavator or a rotatable drum, or the like. The bit **20** and the support block receptor **32** are cooperatively configured such that when the bit **20** is inserted into the support block receptor **32**, the bit **20** is permitted to rotate within the receptor **32**.

[0038] Further, the bit **20** and support block **30** are cooperatively configured such that when the shank **24** is fully inserted into the receptor **32**, a distal end **26** of the shank **24** is extended from the receptor **32**. The distal end **26** of the shank **24** defines a radial groove **28** adapted to receive a retainer **36**. The radial groove **28** is disposed on the shank distal end **26** such that it is exposed when the shank **24** is fully inserted into the support block receptor **32**. A retainer **36** is received within the radial groove **28** for preventing unselected removal of the bit **20** from the support block **30**.

[0039] In the present invention, at least one spring lock mechanism **10** is provided. Each spring lock mechanism **10** is configured to be received about the shank **24** between the support block **30** and the retainer **36**. In the illustrated embodiment, the spring lock mechanism **10** is a conical spring washer.

[0040] **FIGS. 2, 3A** and 3B better illustrate the spring lock mechanism **10** of the present invention. As best illustrated in **FIGS. 3A and 3B**, the spring lock mechanism **10** defines a frustoconical configuration having a selected inside diameter d_i, outside diameter d_o, and uncompressed height h_u. For discussion purposes, the spring lock mechanism **10** defines an upper end **12** at the inside diameter d_i, and a lower end **14** at the outside diameter d_o. The inside diameter d_i is selected to receive the bit shank distal end **26**. The spring lock mechanism **10** is fabricated from a resilient material to allow it to compress. When compressed, the spring lock mechanism **10** defines a compressed height h_c. However, when the retainer **36** is removed, the spring lock mechanism **10** returns to its uncompressed height h_u.

[0041] While the spring lock mechanism **10** may be compressed when assembled on the shank **24**, it will be understood that the present invention includes the embodiment wherein the spring lock mechanism **10** is not compressed. In one embodiment, this is accomplished by incorporating one or more spring lock mechanisms **10** configured to be closely received about the shank **24** in an uncompressed state. Alternatively, at least one spring lock mechanism **10** is incorporated in a compressed state and, over time and with use, the spring lock mechanism **10** is worn until it is uncompressed. In either embodiment, a small gap **38** is defined to allow the bit **20** to freely rotate within the support block **30**. This is best illustrated in **FIG. 1A**.

[0042] In the preferred embodiment, the spring lock mechanism **10** is oriented such that the lower end **14** is engaged with the bottom surface **34** of the support block **32** and the upper end **12** is engaged with the retainer **36**. However, it will be understood by those skilled in the art that the orientation of the spring lock mechanism **10** may be reversed.

[0043] **FIG. 4** illustrates an assembly including the bit **20**, support block **30**, spring lock mechanism **10** of the present invention, and the retainer **36** illustrated in **FIG. 1**. It is noted that in the unassembled illustration of **FIG. 1**, the spring lock mechanism **10** is shown uncompressed, while in the assembled illustration of **FIG. 4**, the spring lock mechanism **10** is compressed. This is in contrast to the embodiment of **FIG. 1A**, where the spring lock mechanism **10** remains uncompressed when assembled. In this state, the spring lock mechanism **10** exerts a force between the support block **30** and the retainer **36**. Because the support block **30** is fixed, the force from the spring lock mechanism **10** is applied to the retainer **36** and is transferred to the radial groove **28** of the bit shank **24**. The bit **20** is thus biased into support block receptor **32**. However, the bit **20** is allowed to rotate within the receptor **32**, thereby providing the benefit of prolonged life.

[0044] **FIG. 5** is an end view of the assembly of **FIG. 4** better illustrating the configuration of the retainer **36**. In the illustrated embodiment, the retainer **36** is a hairpin style retainer. However, it will be understood that other retainer configurations such as, but not limited to, a lock washer, a snap ring, or a hose clamp, may be used with similar results and within the scope of the present invention.

[0045] As illustrated in **FIGS. 6 and 7**, more than one spring lock mechanism **10** may be incorporated. In the embodiment of **FIG. 6**, the respective upper ends **12** of two spring lock mechanisms **10** are disposed in contact one with the other. In **FIG. 7**, the respective lower ends **14** are in contact with each other. Although not illustrated, it will be understood that more than one spring lock mechanism **10** may be provided with each being oriented similarly and nested within each other spring lock mechanism **10**. It will further be understood that any combination of the number and orientation of spring lock mechanisms **10** may be incorporated within the scope of the present invention. A plurality of spring lock mechanisms **10** is used specifically in situations where the bottom surface **34** of the support block **30** has been worn, thus rendering a single spring lock mechanism **10** less effective.

[0046] Illustrated in **FIGS. 8 and 9** is an alternate embodiment of the spring lock mechanism **10**A of the present invention. In this embodiment, a notch **16** is defined for receiving the bit shank distal end **26** as illustrated in **FIG. 12**. The notch **16** provides a mechanism whereby the spring lock mechanism **10**A may be removed and replaced while

the bit **20** is mounted within the support block **30** without requiring the removal of the retainer **36**.

[**0047**] A further alternate embodiment of the spring lock mechanism **10**B is illustrated in **FIGS. 10 and 11**. The spring lock mechanism **10**B defines a notch **16** as in the previous embodiment for insertion and removal from the bit shank distal end **26**. The spring lock mechanism **10**B further defines a deformed portion **18** to assist in manipulating the spring lock mechanism **10**B. The spring lock mechanism **10**B further serves to replace the conventional retainer **36**.

[**0048**] As illustrated in **FIG. 12**, the spring lock mechanism **10**, spring lock mechanism **10**A, and spring lock mechanism **10**B are compatible with each other, and can be used in cooperation with one another in various combinations. Illustrated is a spring lock mechanism **10** inserted over the bit shank distal end **26**. A spring lock mechanism **10**A is then placed by either receiving the bit shank distal end **26** through the opening **12**A, or by inserting the bit shank distal end **26** through the notch **16**. Finally, a spring lock mechanism **10**B is then placed by inserting the bit shank distal end **26** through the notch **16**. In so doing, the combination of the spring lock mechanisms **10**, **10**A, **10**B maintain the position of the bit **20** within the support block **30**. It will be understood by those skilled in the art that various other combinations and arrangements of the spring lock mechanisms **10**, **10**A, **10**B are within the scope of the present invention.

[**0049**] While a conical spring washer is illustrated and described, it will be understood that other devices may be used within the scope of the present invention. For example, at least one wave spring, compression spring, tension spring, or other type of spring may be used in lieu of the conical spring washer.

[**0050**] From the foregoing description, it will be recognized by those skilled in the art that a spring lock mechanism for an earthworking bit has been provided. The spring lock mechanism is provided for engaging an earthworking bit, or bit, into a proximate relationship with a bit holder, thereby reducing the failure rate of the bit while also allowing the bit to rotate within the bit block. Because the spring lock mechanism biases the bit into the support block receptor, the flange defined by the upper end of the bit is drawn into close engagement with the upper surface of the support block. This not only prevents the bit from rocking relative to the support block, but also prevents contaminants such as dust, dirt, mud and rocks from entering the support block receptor. Thus, the cumulative effects of the bit shank being loosely received within the support block receptor are substantially eliminated. In the field, it has been shown that the life of the bit has been increased on an average of 25%. Further, because of the reduction of wear in the support block receptor, the life of the support block has been increased as well.

[**0051**] While the present invention has been illustrated by description of several embodiments and while the illustrative embodiments have been described in considerable detail, it is not the intention of the applicant to restrict or in any way limit the scope of the appended claims to such detail. Additional advantages and modifications will readily appear to those skilled in the art. The invention in its broader aspects is therefore not limited to the specific details, representative apparatus and methods, and illustrative examples shown and described. Accordingly, departures may be made from such details without departing from the spirit or scope of applicant's general inventive concept.

1. A spring lock mechanism for engaging a ground-engaging tool into a support block, the support block defining a receptor, the ground-engaging tool defining a bit at a proximal end and a shank adapted to be received within the support block receptor, the shank defining an annular groove, a retainer being provided for being received within the ground-engaging tool annular groove, said spring lock mechanism being adapted to be received on the ground-engaging tool shank and between the support block and the retainer, said spring lock mechanism being adapted to minimize movement of the ground-engaging tool along a longitudinal axis therein and within the support block receptor, said spring lock mechanism being uncompressed when disposed between the support block and the retainer in said assembly.

2. The spring lock mechanism of claim 1 wherein said spring lock mechanism includes a first spring lock mechanism and a second spring lock mechanism.

3. The spring lock mechanism of claim 2 wherein said lower end of said first spring lock mechanism is disposed proximate said lower end of said second spring lock mechanism.

4. The spring lock mechanism of claim 3 wherein said upper end of said first spring lock mechanism is disposed proximate said upper end of said second spring lock mechanism.

5. The spring lock mechanism of claim 3 wherein said first spring lock mechanism is nested within said second spring lock mechanism.

6. The spring lock mechanism of claim 1 wherein said spring lock mechanism is selected from at least a wave spring, a compression spring, and a tension spring.

7. The spring lock mechanism of claim 1 wherein said spring lock mechanism further defines a notch adapted to receive the ground-engaging tool shank, whereby said spring lock mechanism is removable from and insertable on said ground-engaging tool shank without requiring removal of said retainer.

8. The spring lock mechanism of claim 7 wherein said spring lock mechanism further defines a deformed portion adapted to be grasped by a user, whereby removal and insertion of said spring lock mechanism is simplified.

9. A ground-engaging tool assembly comprising:

a support block defining a receptor;

a ground-engaging tool defining a bit at a proximal end and a shank adapted to be received within said support block receptor, said shank defining an annular groove;

a retainer adapted to be received within said ground-engaging tool annular groove; and

at least one spring lock mechanism received on said ground-engaging tool shank and between said support block and said retainer, said at least one spring lock mechanism being adapted to minimize movement of the ground-engaging tool along a longitudinal axis therein and within the support block receptor, said at least one spring lock mechanism being uncompressed when disposed between the support block and the retainer in said assembly.

10. The ground-engaging tool assembly of claim 9 wherein said at least one spring lock mechanism includes a first spring lock mechanism and a second spring lock mechanism.

11. The ground-engaging tool assembly of claim 10 wherein said lower end of said first spring lock mechanism is disposed proximate said lower end of said second spring lock mechanism.

12. The ground-engaging tool assembly of claim 10 wherein said upper end of said first spring lock mechanism is disposed proximate said upper end of said second spring lock mechanism.

13. The ground-engaging tool assembly of claim 10 wherein said first spring lock mechanism is nested within said second spring lock mechanism.

14. The ground-engaging tool assembly of claim 10 wherein said at least one spring lock mechanism is selected from at least a wave spring, a compression spring, and a tension spring.

15. The ground-engaging tool assembly of claim 9 wherein said spring lock mechanism further defines a notch adapted to receive the ground-engaging tool shank, whereby said spring lock mechanism is removable from and insertable on said ground-engaging tool shank without requiring removal of said retainer.

16. The ground-engaging tool assembly of claim 15 wherein said spring lock mechanism further defines a deformed portion adapted to be grasped by a user, whereby removal and insertion of said spring lock mechanism is simplified.

* * * * *