US 20060201848A1

(19) **United States**

(12) **Patent Application Publication**

(10) **Pub. No.: US 2006/0201848 A1**

(43) **Pub. Date: Sep. 14, 2006**

**Lin et al.**

(54) **METHOD FOR REDUCING MASK PRECIPITATION DEFECTS**

(76) Inventors: **Ting-Yu Lin**, Taipei City (TW); **Yi-Ming Dai**, Hsin-Chu (TW); **Chi-Hung Liao**, Sanchong City (TW); **Li-Kong Turn**, Taichung (TW); **Louie Liu**, Hsin-Chu (TW); **Ho-Ku Lan**, Jubei City (TW); **Hsiang Liu**, Hsinchu City (TW)

Correspondence Address:
**DUANE MORRIS LLP**
**IP DEPARTMENT (TSMC)**
**30 SOUTH 17TH STREET**
**PHILADELPHIA, PA 19103-4196 (US)**

(21) Appl. No.: **11/079,617**

(22) Filed: **Mar. 14, 2005**

**Publication Classification**

(51) **Int. Cl.**
***B65D 85/00*** (2006.01)

(52) **U.S. Cl.** ..... **206/711**; 206/710

(57) **ABSTRACT**

In a container for transporting a reticle during a semiconductor manufacturing process, the reticle including a base made of isolating material and a metallic layer deposited onto a surface of the base, disclosed is a method for isolating and removing environmental contaminants which includes filling the container with inert gas, thereby purging the environmental contaminants, as well as inlet and outlet features to allow for the purging of clean inert gas and impurities.

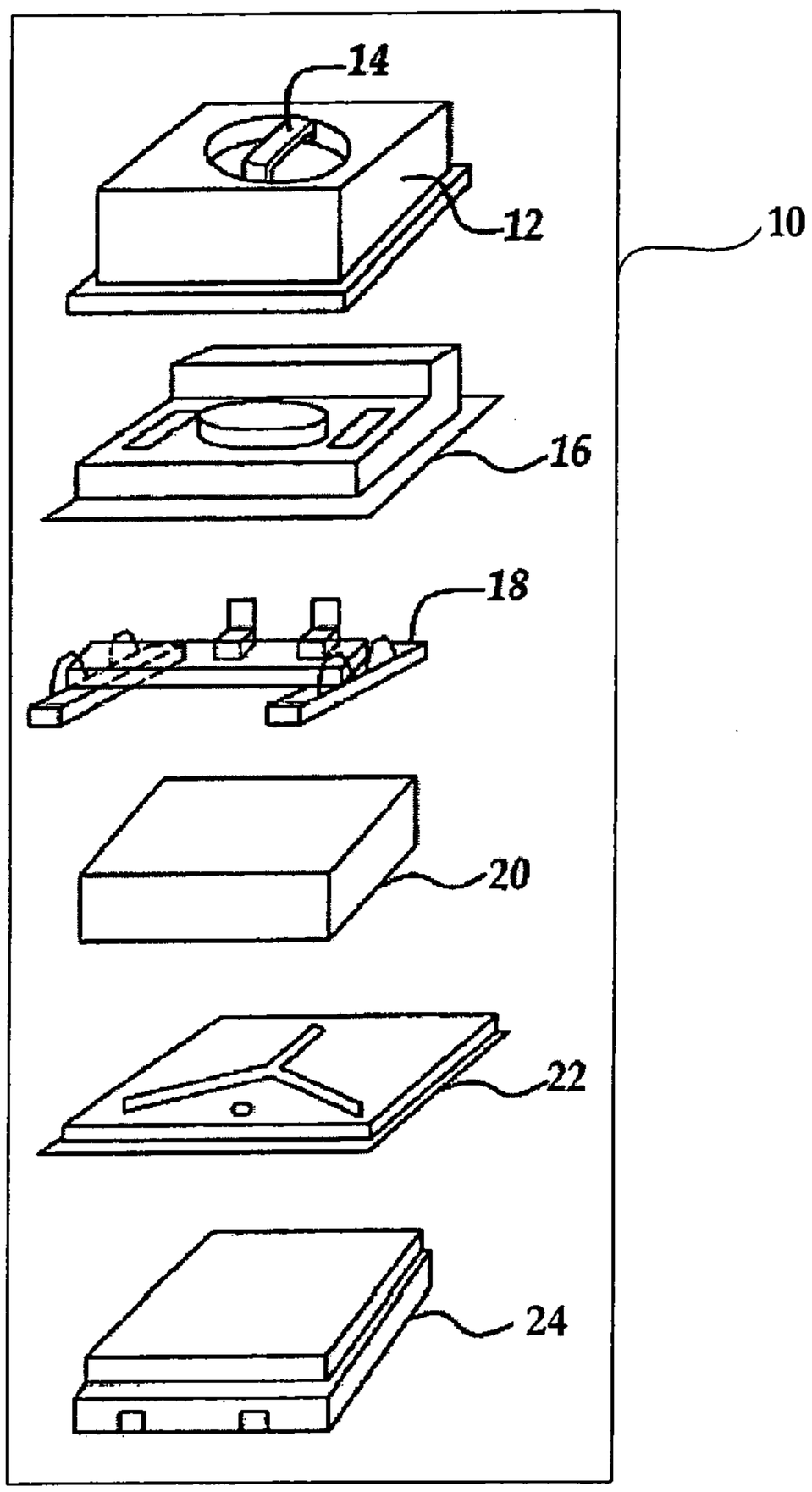

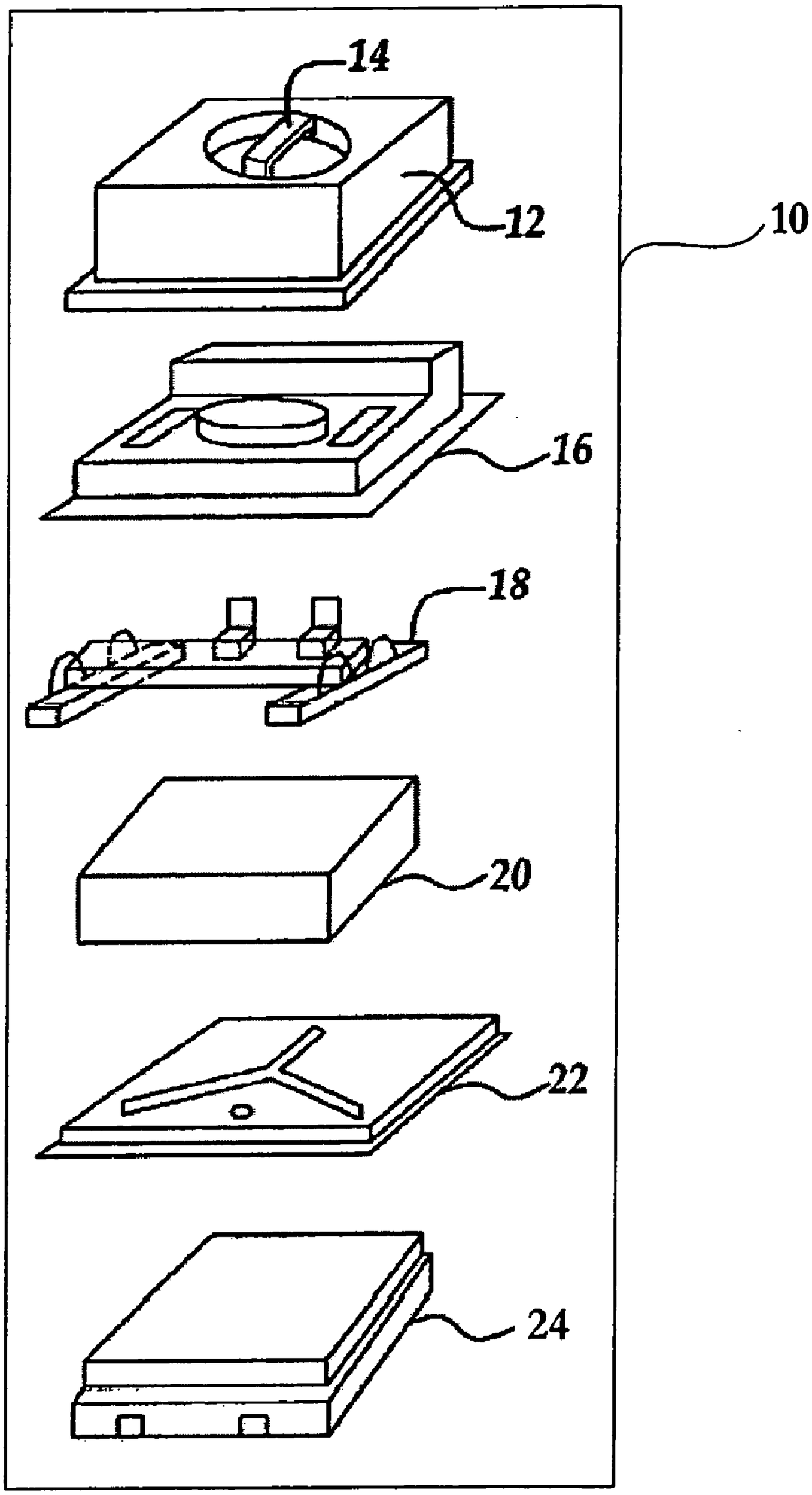


*Figure 1*

# METHOD FOR REDUCING MASK PRECIPITATION DEFECTS

## FIELD OF THE INVENTION

[0001] The present invention relates in general to semiconductor technology, and more specifically to containers which store a reticle. Even more specifically, the invention relates to a method for reducing mask precipitate defects.

## BACKGROUND OF THE INVENTION

[0002] In the semiconductor fabrication process, a square cross-sectional or rectangular cross-sectional container made of a plastic material is frequently used to transport articles. These articles may include silicon wafers, reticles or other substrates used for building integrated circuit (IC) devices. A reticle is a transparent ceramic substrate that is coated with a metallic layer forming a pattern for an electronic circuit. It is generally used in an imaging step during a photolithographic process wherein a pattern of a circuit is reproduced on the surface of an electronic substrate, i.e., on a wafer surface.

[0003] Reticle containers have been known in the art. In U.S. Pat. No. 4,719,705, an adjustable transporter for moving a reticle past an optical slit as a step in the production of semiconductor wafers is disclosed. The reticle stage rides along a pair of optically flat planar, intersecting, bearing surfaces supported by air bearings on each bearing surface. Pressurized air and vacuum may be simultaneously employed to effect substantially friction-free motion while preventing displacement from the bearing surfaces. Axial adjustments on each air bearing permit precise adjustment of the reticle stage and reticle.

[0004] In U.S. Pat. No. 4,842,136 is a dust-proof container for keeping a mask or reticle usable to transfer a pattern onto a semiconductor wafer for the manufacture of integrated circuits. The container includes a casing, within which supporting pins for supporting the mask or reticle are formed. Also in the casing, there are provided leaf springs for pressing the mask or reticle toward the supporting pins, and a releasing mechanism for releasing the reticle pressing force of the leaf springs. The releasing mechanism is responsive to a non-mechanical signal such as an electric signal to release the reticle pressing force. A shape memory alloy may be usable in the releasing mechanism. An opening/closing mechanism is provided to open/close a door, which is operable to cover an opening formed in the casing for the insertion and extraction of the mask or reticle. A shape memory alloy may be used in the opening/closing mechanism. With the dust-proof container of the invention, the necessity of use of a mechanical-signal transmitting system such as a linkage or otherwise in the casing is avoided. This effectively prevents creation of dust or foreign particles within the casing due to mechanical friction contact. Also, the possibility of adhesion of dust or foreign particles to the mask or reticle contained in the container can be minimized.

[0005] In U.S. Pat. No. 5,314,068, a container for a plate-like article, such as a reticle, includes a bottom member having a holding portion for holding the article in a substantially laid-down state; an upper member to be mated with the bottom member to define a space above the upper surface of the article; a pressing member for resiliently pressing in the space the article against the holding portion; and a fixing portion having an engaging member supported by the upper member and engageable with an end portion of the bottom member. The engaging member is effective to prevent an upward opening motion of the upper member due to a reaction force of the pressing member. In addition, a releasing portion is partially projectable into the fixing portion to press the same in the same direction as the direction of the opening motion of the upper member to thereby release the engaging member.

[0006] U.S. Pat. No. 5,727,685 discloses a cassette or box for containing and holding a planar substrate such as a reticle. The box has a clamp bar coupled to corner supports by a spring or flexure and a linkage. The clamp bar is pivotally attached to bottom corner supports and a spring or flexure and linked to a top corner support, such that movement of the load bar causes the corner supports to pivot away from a reticle being held only at the comers. An elevation bar is also used to preposition the reticle in one direction.

[0007] A reticle support mechanism is disclosed in U.S. Pat. No. 6,216,873. In the mechanism, a reticle may be quickly and easily located and removed, and it is capable of securely supporting a reticle for storage and/or transport. An embodiment of the mechanism includes a pair of reticle supports mounted to a door of a container, and a pair of reticle retainers mounted to a shell of the container. When the container shell is coupled with the container door, sections of the reticle support and reticle retainer engage chamfered edges of the reticle and sandwich the reticle in a secure position within the container. As a result of engaging the reticle at its chamfered edges, potentially harmful contact with the upper and lower surfaces and vertical edges of the reticle is avoided.

[0008] A reticle container equipped with a metal shield is disclosed in U.S. Pat. No. 6,247,599. In a preferred embodiment, the container includes a container body constructed of a top lid, a bottom lid and four side panels forming a cavity therein, wherein one of the four side panels allows access to the cavity. The top lid, the bottom lid and the four side panels are made of an electrically insulating material, at least four support means mounted on the bottom lid in a spaced-apart relationship for supporting the insulating article thereon. An electrically conductive layer substantially overlaps the bottom lid so as to sufficiently shield the insulating article when positioned on the support means.

[0009] The container may further include a metallic knob situated in a top lid. The electrically conductive layer can be formed of a metallic material, or may be formed of a metallic material that does not produce contaminating particles, or may be formed of stainless steel. The electrically conductive layer may also be encapsulated as an insert in the bottom lid. The top lid, bottom lid and four sidewall panels may be formed of a substantially transparent plastic material. The container may further include an insert of an electrically conductive layer molded in the bottom lid. The container may further include a metal shield shaped substantially similar to the top lid for positioning between the top lid and the insulating article to form a metal enclosure with the electrically conductive layer on the bottom lid surrounding the insulating article.

[0010] In another preferred embodiment, the container, which is equipped with a metal shield surrounding an insulating article, includes a container body constructed of a

top lid, a bottom lid and four side panels forming a cavity therein. One of the four sidewall panels allows access to the cavity, while the top lid, bottom lid and four side panels may be formed of an electrically insulating material. There is a plurality of support means on the bottom lid for supporting the insulating article. The metal layer substantially covers the bottom lid and a cup-shaped metal enclosure positioned between the top lid and the insulating article cooperating with the metal layer on the bottom lid to substantially surround the insulating article. In the container, the metal layer and the cup-shaped metal enclosure may be formed of a contaminating particle-free metallic material. The container may further include a metal knob situated in the top lid. The metal layer may be formed as an insert in the bottom lid. The container may further include a second metal layer being molded as an insert in the bottom lid. The top lid, bottom lid and four side panels may be formed of a substantially transparent plastic material. The metal layer and the cup-shaped metal enclosure may be formed of stainless steel. The insulating article positioned on the plurality of support means may be a chrome coated quartz reticle plate.

[0011] The electrostatic discharge-free container may be a reticle pod for storing chrome coated reticle plate. In still another preferred embodiment, a container includes a metal enclosure for shielding an insulating article therein including a container body constructed of a top lid, a bottom lid and four side panels forming a cavity therein wherein one of the four side panels allows access to the cavity. The top lid, bottom lid and four side panels are formed of an electrically insulating material. There is a plurality of support means on the bottom lid for supporting the insulating article, a metal layer molded as an insert substantially overlaps the bottom lid, a cup-shaped metal enclosure positioned juxtaposed to the top lid cooperating with the metal layer to substantially surround the insulating article, and a metal knob situated in the top lid. The container may further include a second metal layer molded as an insert in the bottom lid. The metal layer and the cup-shaped metal enclosure may be fabricated of a contaminating particle-free metallic material.

[0012] A reticle SMIF pod for in situ orientation is disclosed in U.S. Pat. No. 6,338,409 issued to Neary et al. The SMIF pod comprises a pod door. A pod cover is removably receivable on the door to define an interior space. A nest assembly has a plate resting on the pod door in the interior space and a core extending downwardly from the plate through an opening in the pod door. The plate is rotatably mounted on the pod door to selectively orient a workpiece, supported on the plate, in use.

[0013] Alignment means align the plate relative to the pod door in one of plural orthogonal positions. The pod door comprises an upper door plate and a lower door plate and a latch mechanism disposed there between for latching the pod door to the pod cover. The alignment means comprises an alignment leg extending downwardly from the plate and plural spaced apart bores in the pod door for selectively receiving the alignment leg. The alignment means may comprise plural alignment legs extending downwardly from the plate and plural spaced apart bores in the pod door each for receiving one of the alignment legs. The alignment means comprises a locking tab extending radially from the core and plural seats orthogonally positioned in the door for selectively receiving the locking tab. The alignment means may comprise plural orthogonally spaced locking tabs extending radially from the core and plural seats orthogonally positioned in the door each for receiving one of the locking tabs. Means is provided for biasing the plate downwardly against the pod door. The nest assembly comprises a flange on the core. The biasing means comprises a retaining spring disposed between the pod door and the flange. The pod door comprises an upper door plate and a lower door plate and the flange is sandwiched between the upper door plate and the lower door plate. The core includes a downwardly facing groove for actuation by an external engagement device to effect rotation of the plate.

[0014] Also, a conventional pod known to the applicants, which is used for transporting reticles, is shown in **FIG. 1**. The pod **10** comprises an upper cover **12** with a handle **14** affixed to the cover for easy carrying of the pod by an operator, an upper liner **16**, a support **18** for a reticle base **20**, a lower liner **22**, and a lower cover **24**. The configuration of the support **18** relative to the reticle, and especially with regard to the reticle chrome coating (not shown in **FIG. 1**) is such that during transportation the chrome coating can be scratched by the support thus releasing chrome particles, which is highly undesirable.

[0015] Problems associated by previous methods include an inability to fill with inert gas to the reticle pod in **FIG. 1**; current 0.13 and 0.09 193 nm masks suffer from potential contamination; adverse effects on product yield and photomask productivity; a decrease in mask lifetime; mask CD loss after mask cleaning; and adverse effects on the photomask rework rate. These problems are overcome by the present invention.

## SUMMARY OF THE INVENTION

[0016] The present invention relates to a container for transporting a reticle during a semiconductor manufacturing process, the reticle comprising a base made of isolating material and a metallic layer deposited onto a surface of the base, and specifically relates to a method for isolating environmental contaminants, which comprises filling the container with inert gas, thereby purging said environmental contaminants. By the method of the present invention, inert gas is used to purge the environment of the container (e.g., a reticle pod) directly, so as to isolate environmental contaminants.

## BRIEF DESCRIPTION OF THE DRAWINGS

[0017] The above-identified and other objects, features, and advantages of the present invention will become apparent from the ensuing detailed description and the appended drawings, in which:

[0018] **FIG. 1** is an exploded perspective view of a conventional reticle pod.

## DESCRIPTION OF THE PREFERRED EMBODIMENTS

[0019] The present invention relates to a container for transporting a reticle during a semiconductor manufacturing process, the reticle comprising a base made of isolating material and a metallic layer deposited onto a surface of the base, and specifically relates to a method for isolating environmental contaminants which comprises filling the container with inert gas, thereby purging said environmental

contaminants before the reticle is ready for exposure. By the method of the present invention, mask repeating defects are reduced, the lifetime of a 193 nm mask is increased, an increase in photo-productivity results, the frequency of mask cleaning is reduced, and the photo re-work rate is decreased. The container may be, e.g., a reticle pod, reticle stocker or internal reticle library of a scanner (reticle library).

[0020] In the testing of the present invention, 193 nm mask precipitate defects were resolved. Table I, below, shows environment/reticle pod/reticle detection results, using a Sunway AIM-100 $SO_2$ detector:

TABLE I

Environment/reticle pod/reticle detection results, using a Sunway AIM-100 $SO_2$ detector

| Area | Detector location | Result (concentration = ng/cm$^2$/day) |
|---|---|---|
| Mask Room | Mini-environment (without mask in pod) | 12 |
| | Mini-environment (with mask in pod) | 15 |
| | Open environment | 25 |
| | Pod with $N_2$ purge: 1 hour | 3 |
| Scanner around | Mini-environment (without mask in pod) | 13 |
| | Open environment | 25 |

[0021] While the present invention has been described with respect to particular embodiments thereof, it is apparent that numerous other forms and modifications of the invention will be obvious to those skilled in the art. The appended claims and this invention generally should be construed to cover all such obvious forms and modifications, which are within the true spirit and scope of the present invention.

What is claimed is:

**1**. In a container for transporting a reticle during a semiconductor manufacturing process, the reticle comprising a base made of isolating material and a metallic layer deposited onto a surface of the base, a method for removing environmental contaminants which comprises filling the container with inert gas, thereby purging said environmental contaminants.

**2**. The method as recited in claim 1, wherein mask repeating defects are reduced by purging said environmental contaminants.

**3**. The method as recited in claim 1, wherein the lifetime of a 193 nm mask is increased by purging said environmental contaminants.

**4**. The method as recited in claim 1, wherein photo-productivity is increased by purging said environmental contaminants.

**5**. The method as recited in claim 1, wherein the frequency of mask cleaning is reduced by purging said environmental contaminants.

**6**. The method as recited in claim 1, wherein the photo re-work rate is decreased by purging said environmental contaminants.

**7**. The method as recited in claim 1, wherein the container is a reticle pod.

**8**. The method as recited in claim 1, wherein the container is a reticle stocker.

**9**. The method as recited in claim 1, wherein the container is a reticle library.

**10**. In a container for transporting a reticle during a semiconductor manufacturing process, the reticle comprising a base made of isolating material and a metallic layer deposited onto a surface of the base, a method for removing reactants in the container which comprises filling the container with inert gas, thereby purging said reactants.

**11**. The method as recited in claim 10, wherein mask repeating defects are reduced by purging said reactants.

**12**. The method as recited in claim 10, wherein the lifetime of a 193 nm mask is increased by purging said reactants.

**13**. The method as recited in claim 10, wherein photo-productivity is increased by purging said reactants.

**14**. The method as recited in claim 10, wherein the frequency of mask cleaning is reduced by purging said reactants.

**15**. The method as recited in claim 10, wherein the photo re-work rate is decreased by purging said reactants.

**16**. The method as recited in claim 10, wherein the container is a reticle pod.

**17**. The method as recited in claim 10, wherein the container is a reticle stocker.

**18**. The method as recited in claim 10, wherein the container is a reticle library.

* * * * *