US 20060105482A1

(19) United States

(12) Patent Application Publication

(10) Pub. No.: US 2006/0105482 A1

(43) Pub. Date: May 18, 2006

Alferink et al.

(54) ARRAY OF LIGHT EMITTING DEVICES TO PRODUCE A WHITE LIGHT SOURCE

(75) Inventors: **Robertus G. Alferink**, Son (NL); **Michael R. Krames**, Mountain View, CA (US)

Correspondence Address:
PATENT LAW GROUP LLP
2635 NORTH FIRST STREET
SUITE 223
SAN JOSE, CA 95134 (US)

(73) Assignee: **Lumileds Lighting U.S., LLC**, San Jose, CA

(21) Appl. No.: **11/297,287**

(22) Filed: **Dec. 7, 2005**

Related U.S. Application Data

(63) Continuation of application No. 10/987,241, filed on Nov. 12, 2004.

Publication Classification

(51) **Int. Cl.**
H01L 21/00 (2006.01)

(52) **U.S. Cl.** **438/22**

(57) **ABSTRACT**

A device is provided with an array of a plurality of phosphor converted light emitting devices (LEDs) that produce broad spectrum light. The phosphor converted LEDs may produce light with different correlated color temperature (CCT) and are covered with an optical element that assists in mixing the light from the LEDs to produce a desired correlated color temperature. The phosphor converted LEDs may also be combined in an array with color LEDs. The color LEDs may be controlled to vary their brightness such that light with an approximately continuous broad spectrum is produced. By controlling the brightness of the color LEDs, light can be produced with a fixed brightness over a large range of white points with a high color rendering quality.

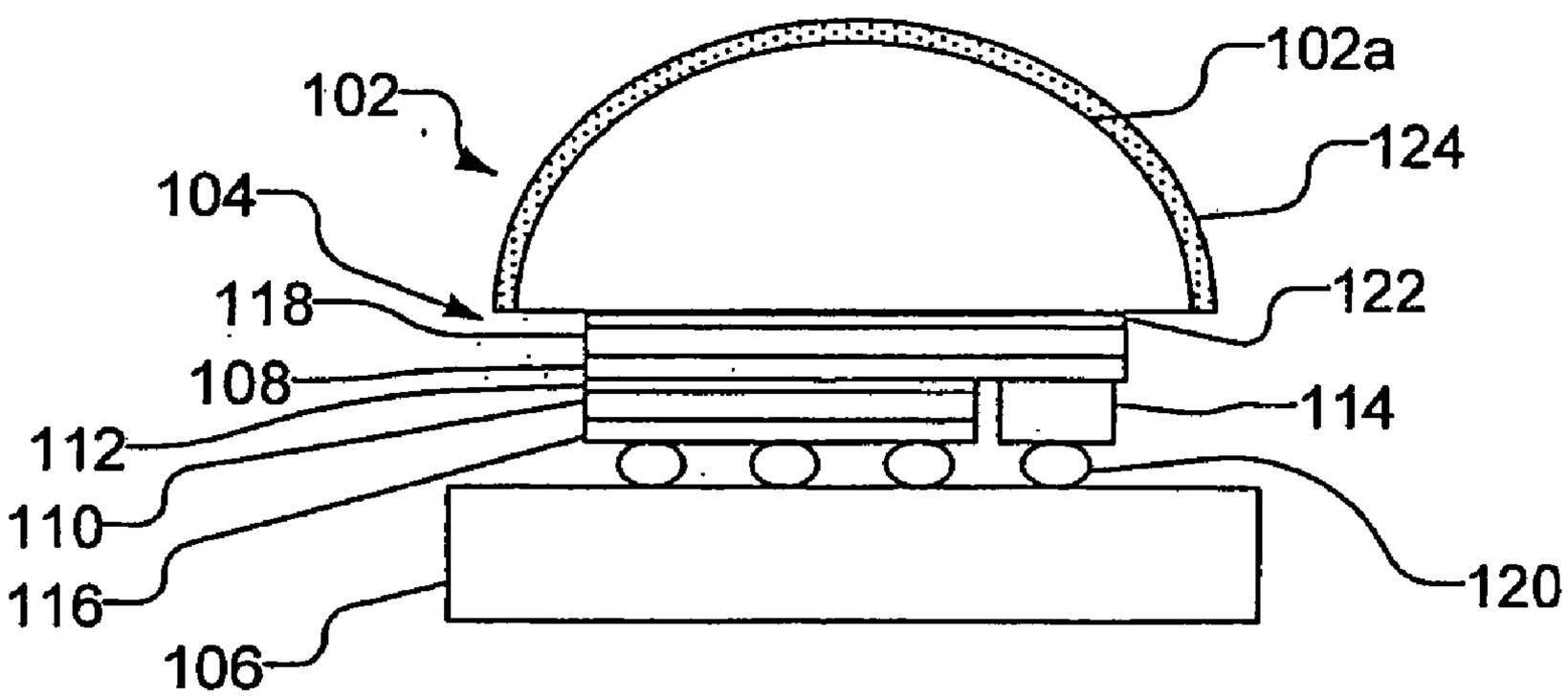

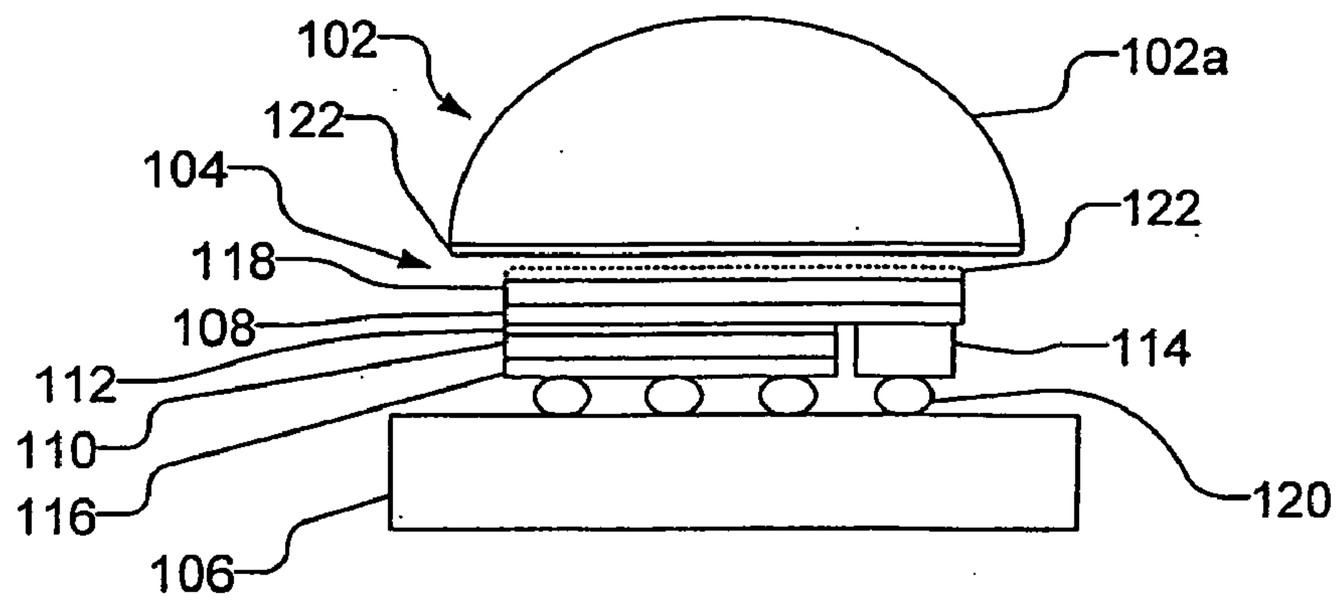

Fig. 1A

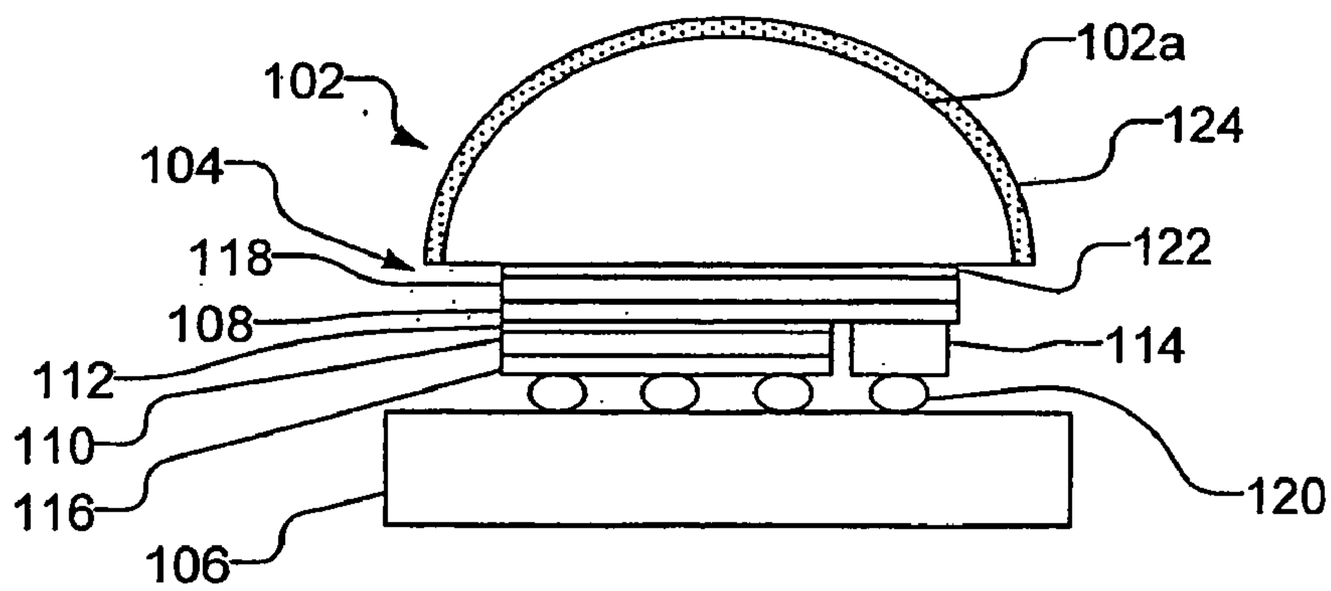

Fig. 1B

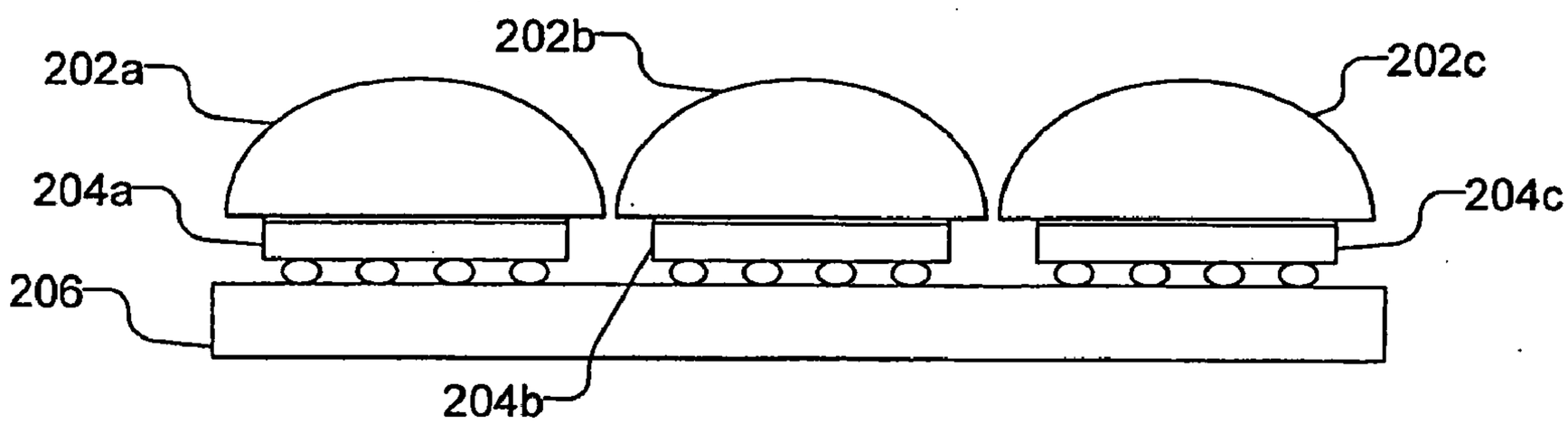

Fig. 2

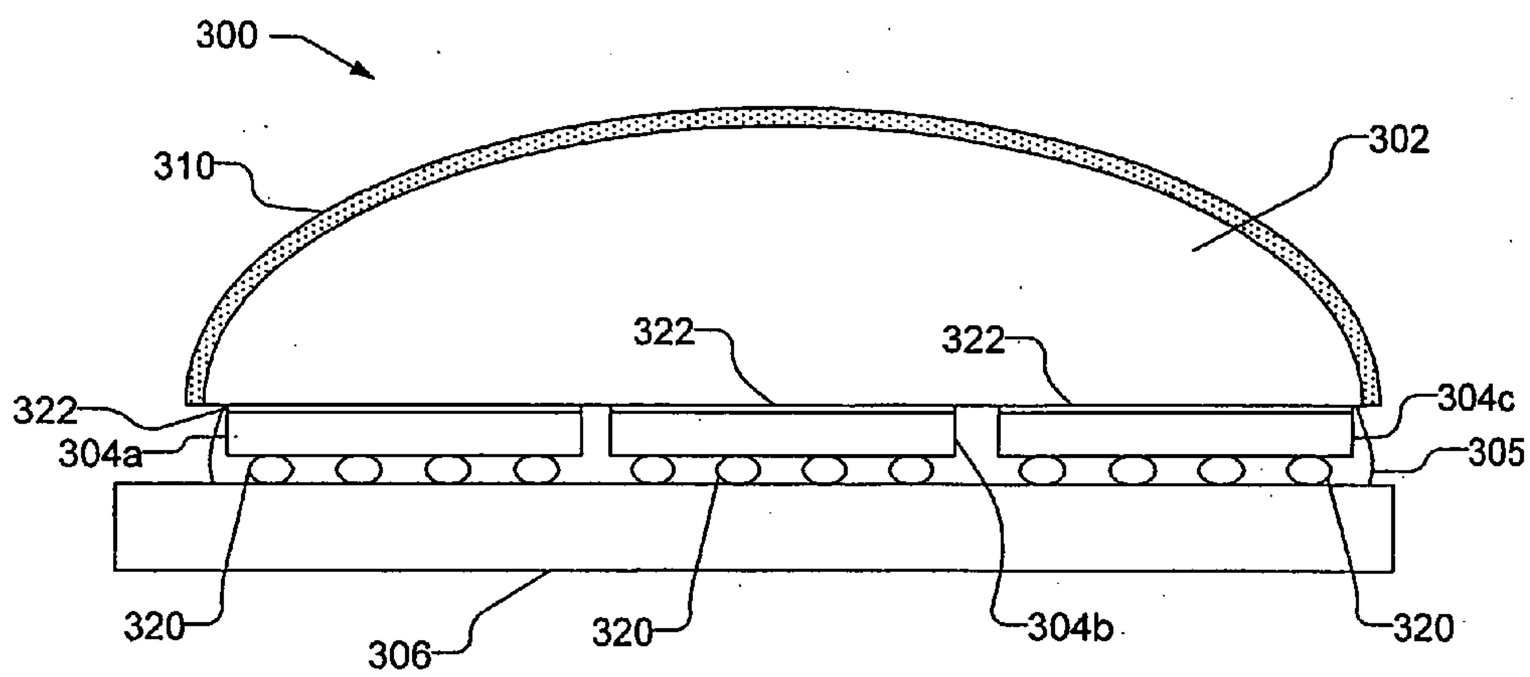
300
310
302
322
322
322
304a
304c
305
320
306
320
304b
320

Fig. 3

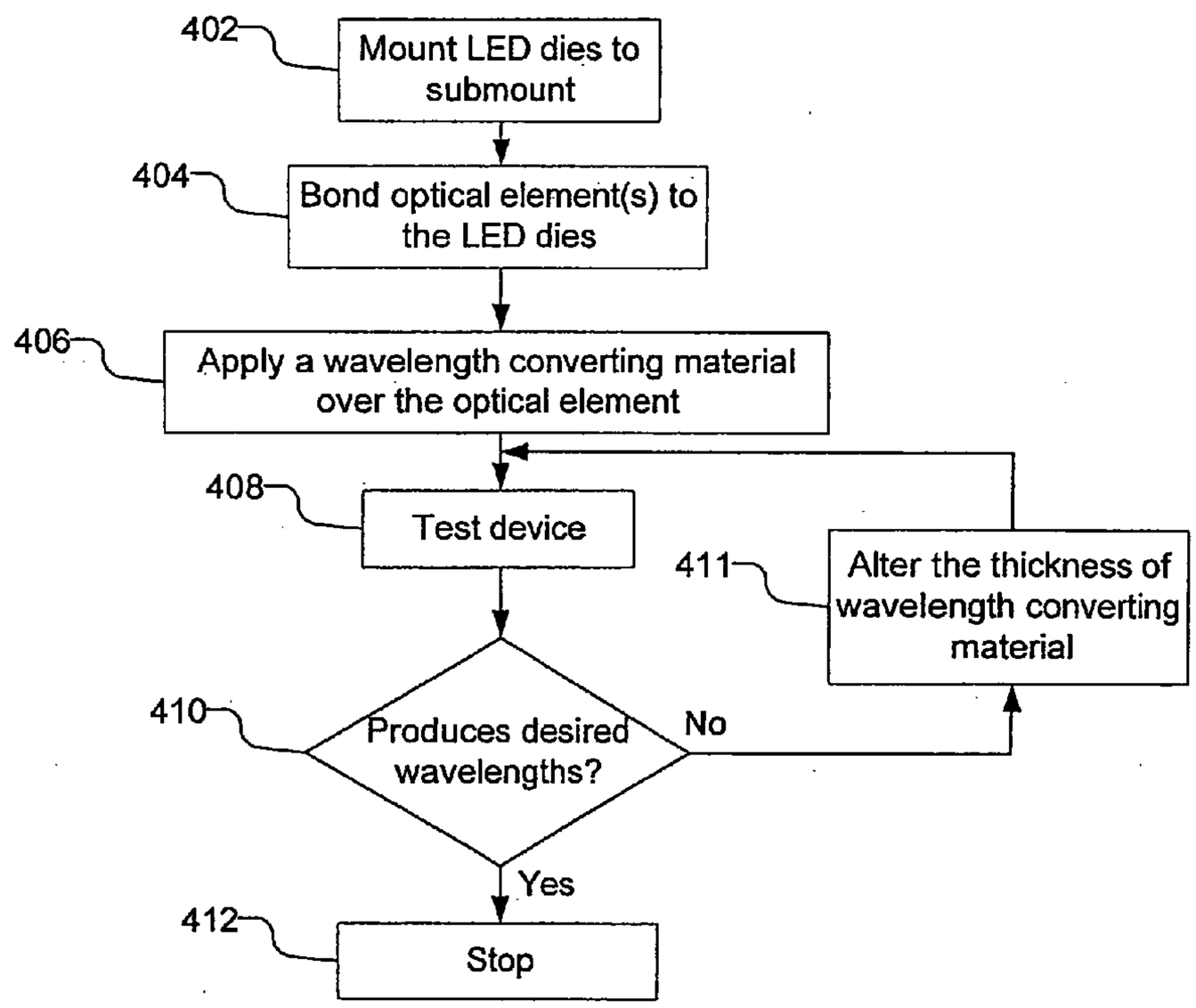
402
Mount LED dies to submount
404
Bond optical element(s) to the LED dies
406
Apply a wavelength converting material over the optical element
408
Test device
411
Alter the thickness of wavelength converting material
410
Produces desired wavelengths?
No
Yes
412
Stop

Fig. 4

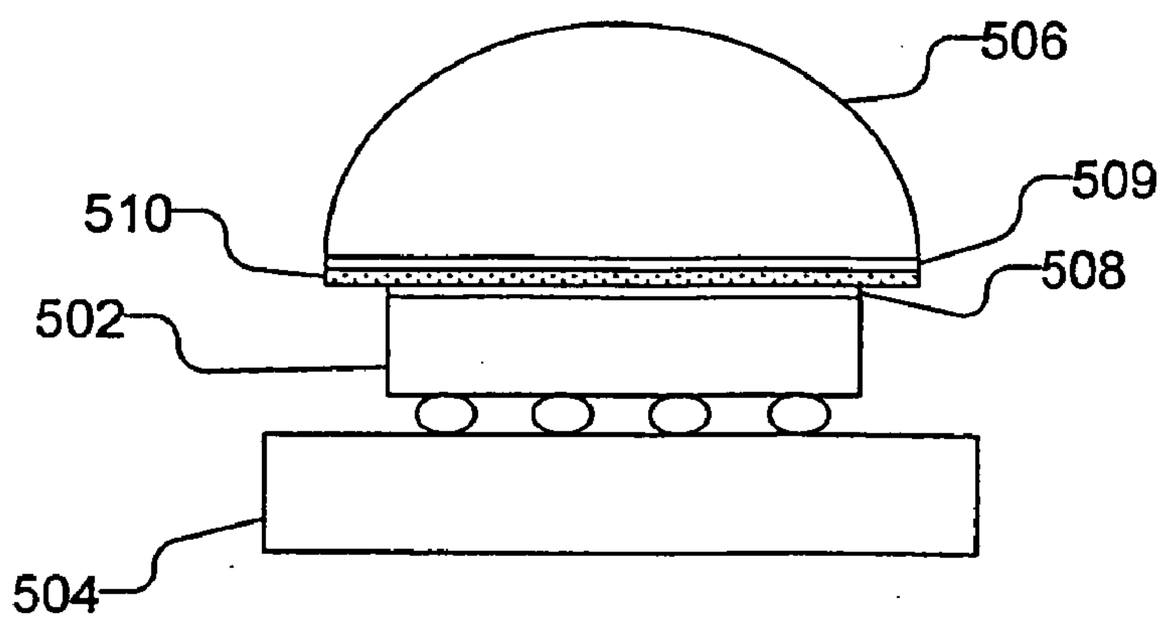

Fig. 5

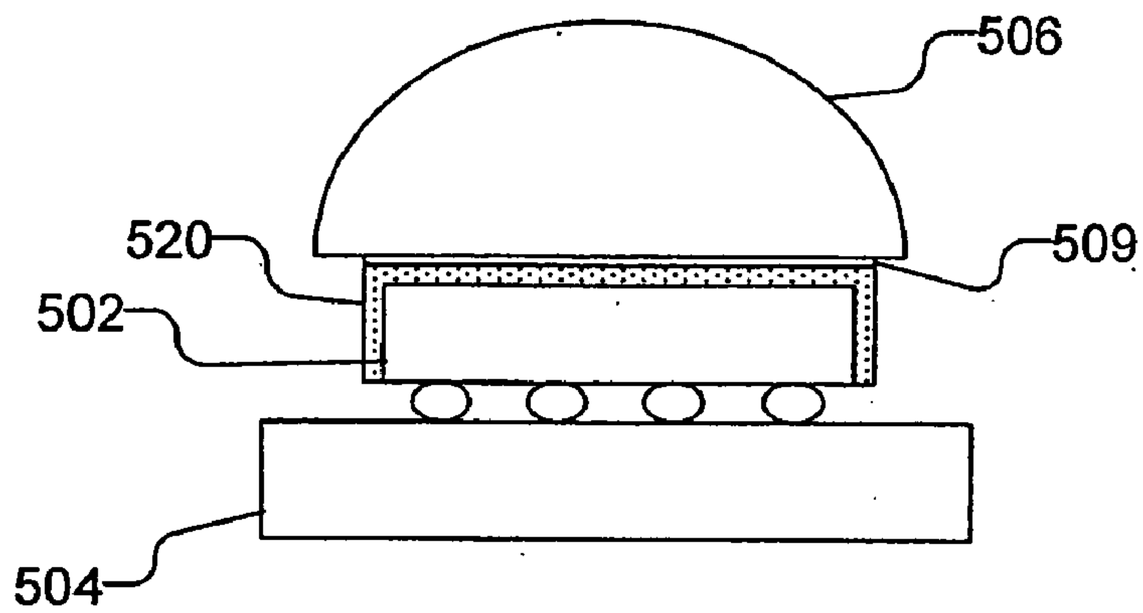

Fig. 6

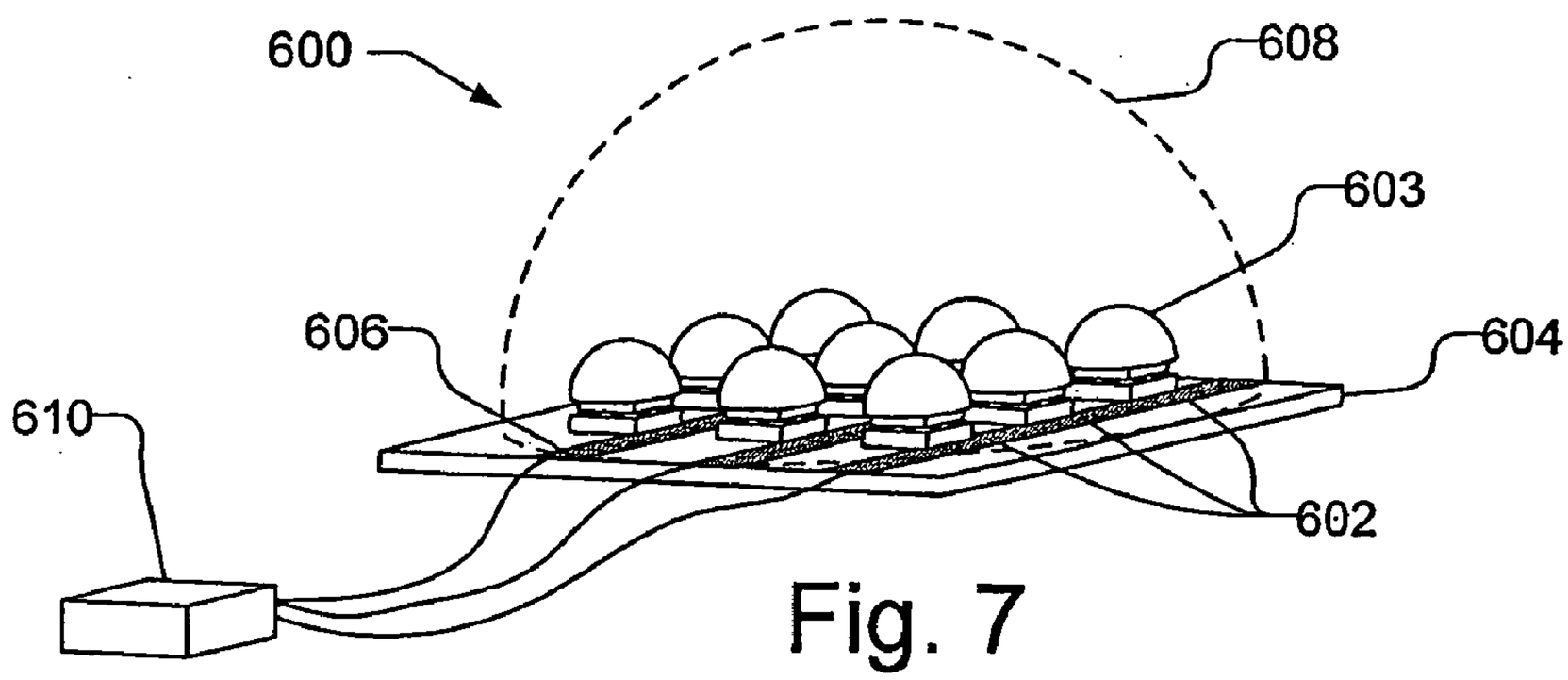

Fig. 7

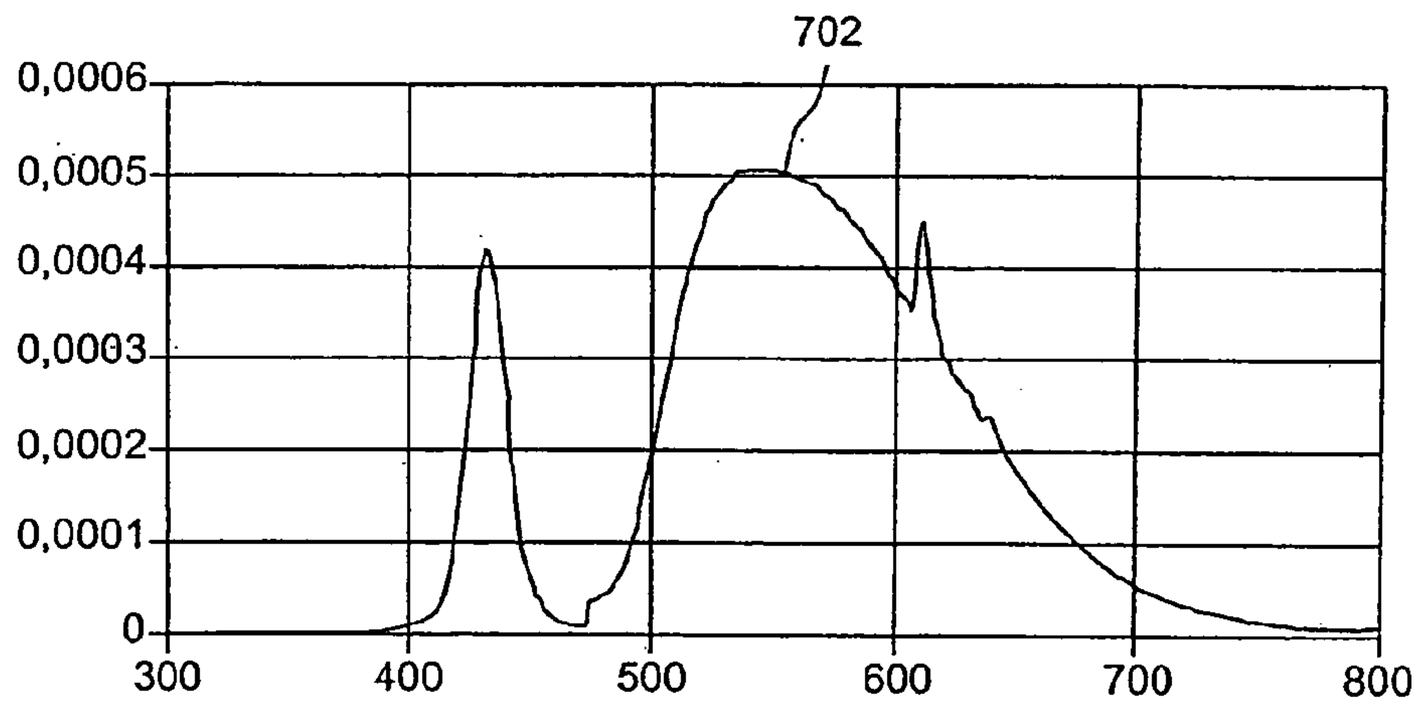
702
0,0006
0,0005
0,0004
0,0003
0,0002
0,0001
0
300
400
500
600
700
800

Fig. 8

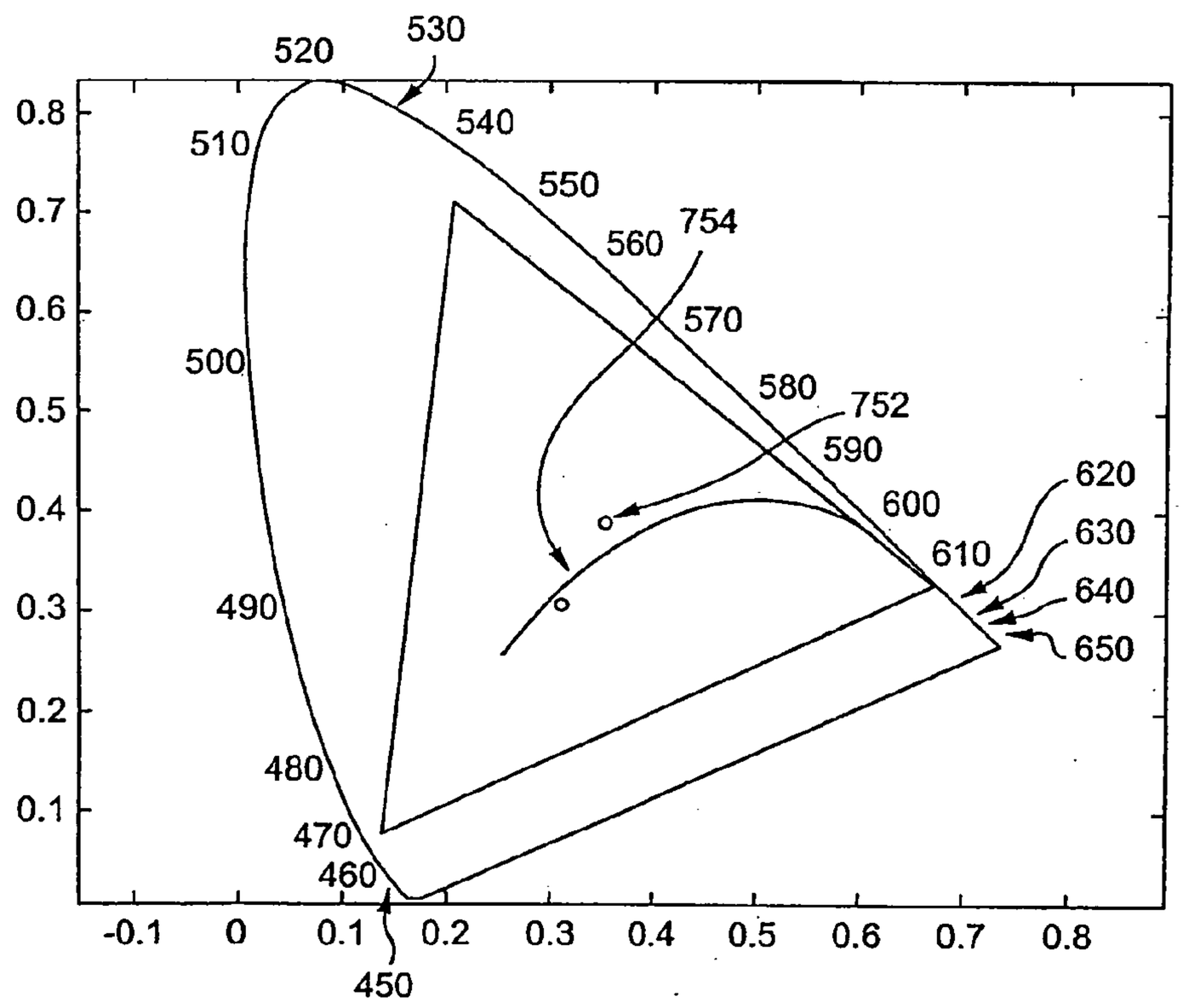
520
530
540
550
560
754
570
580
752
590
600
610
620
630
640
650
510
500
490
480
470
460
450
0.8
0.7
0.6
0.5
0.4
0.3
0.2
0.1
-0.1
0
0.1
0.2
0.3
0.4
0.5
0.6
0.7
0.8

Fig. 9

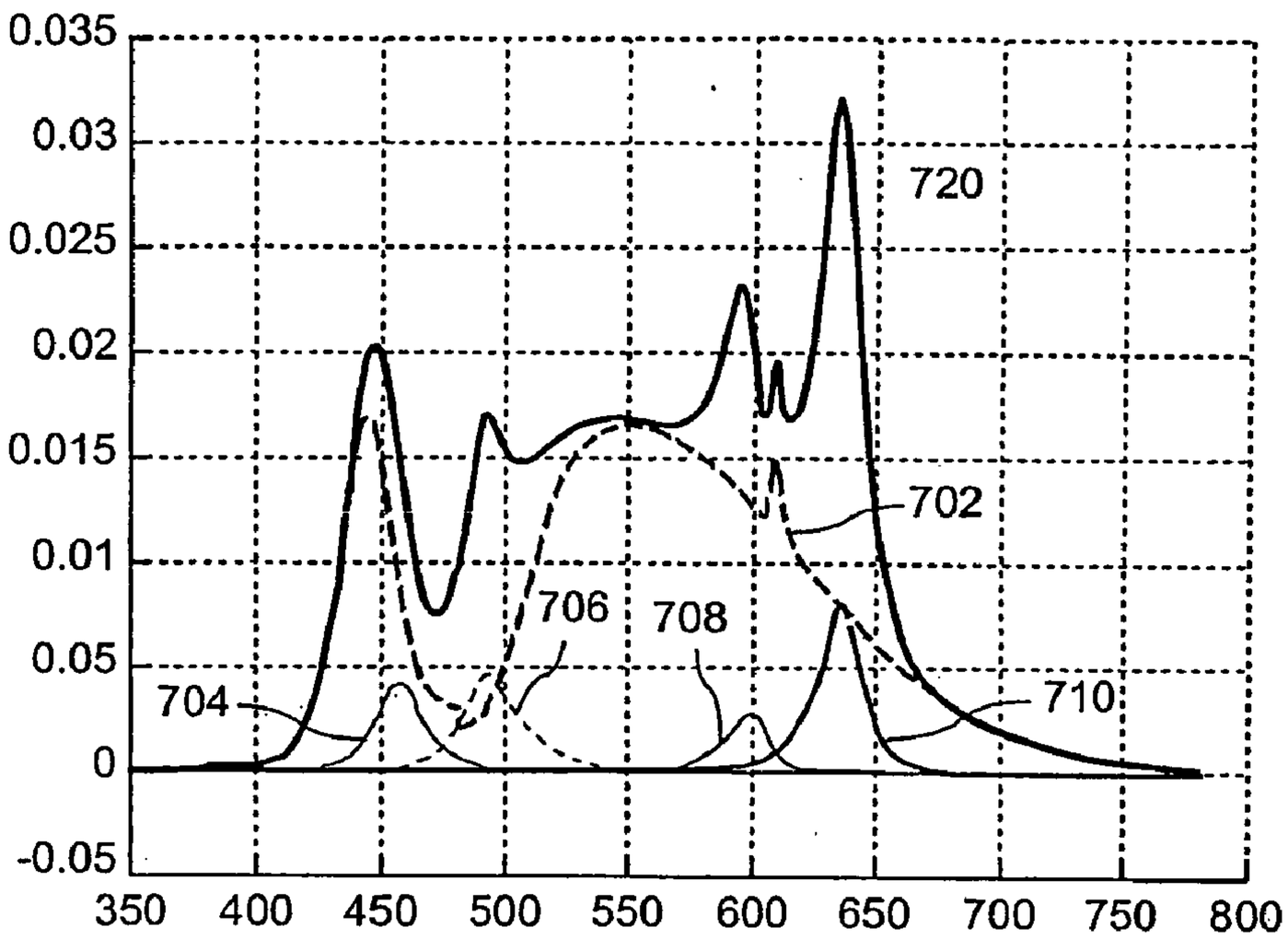
0.035
0.03
0.025
0.02
0.015
0.01
0.05
0
-0.05
350
400
450
500
550
600
650
700
750
800
720
702
706
708
704
710

Fig. 10

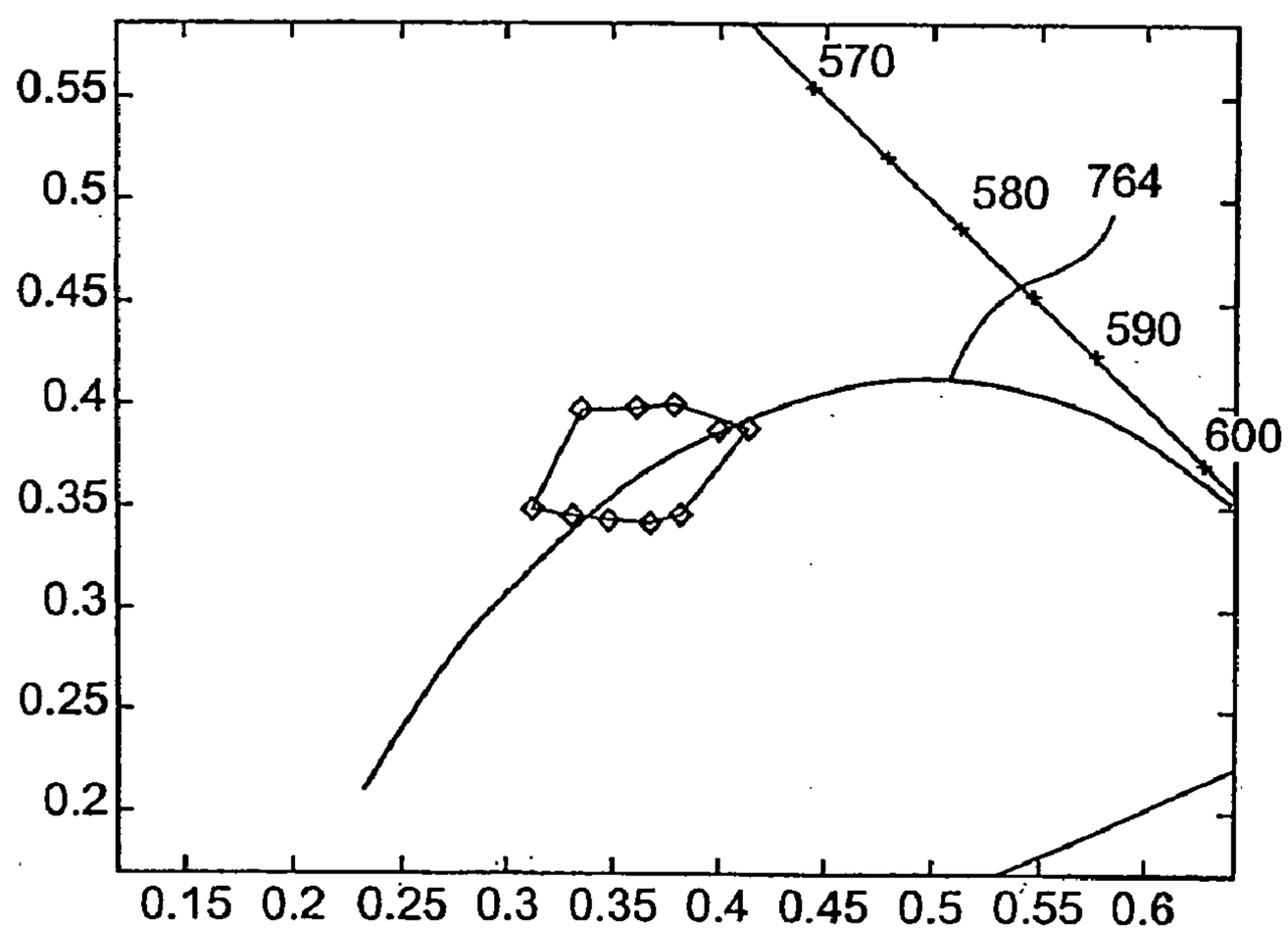
0.55
0.5
0.45
0.4
0.35
0.3
0.25
0.2
0.15
0.2
0.25
0.3
0.35
0.4
0.45
0.5
0.55
0.6
570
580
764
590
600

Fig. 11

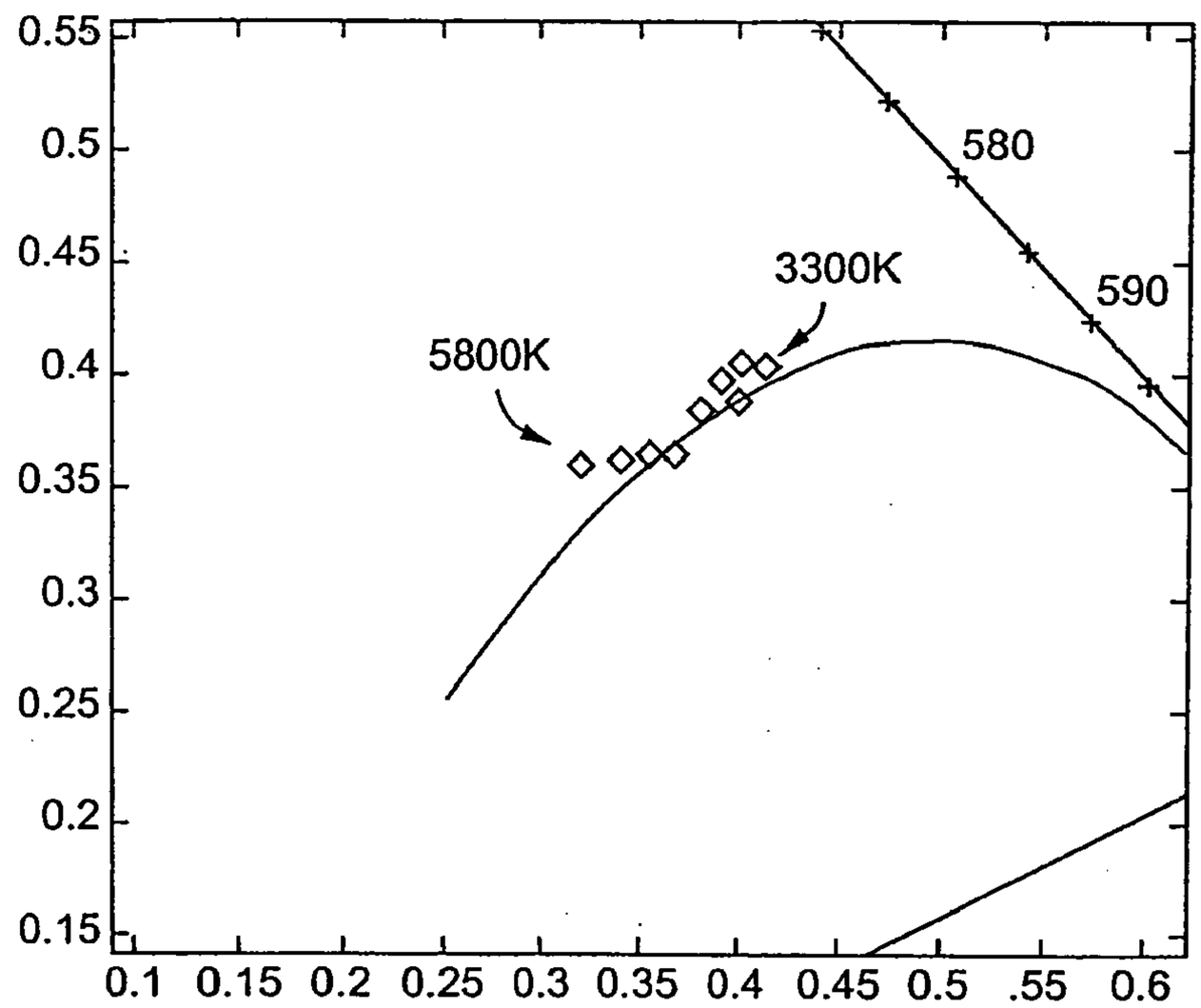
0.55
0.5
0.45
0.4
0.35
0.3
0.25
0.2
0.15
0.1
0.15
0.2
0.25
0.3
0.35
0.4
0.45
0.5
.55
0.6
580
590
3300K
5800K

Fig. 12

ARRAY OF LIGHT EMITTING DEVICES TO PRODUCE A WHITE LIGHT SOURCE

CROSS REFERENCE TO RELATED APPLICATION

[0001] The present application is a continuation of and claims priority to U.S. patent application Ser. No. 10/987,241, filed Nov. 12, 2004, entitled "Bonding an Optical Element to a Light Emitting Device", by Michael D. Camras et al, which is incorporated herein by reference.

FIELD OF THE INVENTION

[0002] The present invention relates generally to light emitting devices and, more particularly, to an array of light emitting devices to produce a white light source.

BACKGROUND

[0003] Adding or mixing a number of different color light emitting devices (LEDs) can be used to produce light with a broad spectrum. The spectrum produced, however, consists of the peaks of the narrow band spectra produced by the individual LEDs. Consequently, the color rendering of such a light source is poor. White light sources with high color rendering, such as that produced by a halogen lamp, have a continuous or near continuous spectrum over the full visible light spectrum (400-700 nm).

[0004] Thus, a white light source with high color rendering that is produced using an array of LEDs is desired

SUMMARY

[0005] In accordance with one embodiment of the present invention, a plurality of phosphor converted light emitting devices may be combined in an array to obtain light with a desired correlated color temperature (CCT). In one embodiment, the phosphor converted light emitting devices produce light with different CCTs. An array of the plurality of phosphor converted light emitting devices may be covered with an optical element that optionally can be filled with a material that assists in light extraction and mixing the light to produce light with the desired CCT. In another embodiment, a plurality of color light emitting devices are combined with the plurality of phosphor converted light emitting devices and the brightness of the color light emitting devices are controlled to produce light with the desired characteristics.

BRIEF DESCRIPTION OF THE DRAWINGS

[0006] **FIG. 1A** illustrates a side view of an LED die mounted on a submount and an optical element that is to be bonded to the LED die.

[0007] **FIG. 1B** illustrates the optical element bonded to the LED die.

[0008] **FIG. 2** illustrates an embodiment in which multiple LED dice are mounted to a submount and a separate optical element is bonded to each LED die.

[0009] **FIG. 3** illustrates an embodiment in which multiple LED dice are mounted to a submount and a single optical element is bonded to the LED dice.

[0010] **FIG. 4** is a flow chart of one implementation of producing such an LED device with wavelength converting material covering the optical element.

[0011] **FIG. 5** illustrates an embodiment in which a layer of wavelength converting material is disposed between the bonding layer and the optical element.

[0012] **FIG. 6** illustrates an embodiment in which a layer of wavelength converting material is deposited on the LED die.

[0013] **FIG. 7** illustrates an array of LEDs, which are mounted on a board.

[0014] **FIG. 8** is a graph of the broad spectrum produced by a phosphor converted blue LED.

[0015] **FIG. 9** is a CIE chromaticity diagram for the spectrum shown in **FIG. 8**.

[0016] **FIG. 10** is a graph of the spectra produced by phosphor converted LEDs and colored LEDs, which are combined to produce an approximately continuous spectrum.

[0017] **FIG. 11** is a portion of a CIE chromaticity diagram that shows the variation in the CCT that may be produced by varying the brightness of the colored LEDs.

[0018] **FIG. 12** is a portion of another CIE chromaticity diagram that illustrates variable CCT values for an array of 29 phosphor converted LEDs and 12 color LEDs.

DETAILED DESCRIPTION

[0019] **FIG. 1A** illustrates a side view of a transparent optical element **102** and a light emitting diode (LED) die **104** that is mounted on a submount **106**. The optical element **102** is to be bonded to the LED die **104** in accordance with an embodiment of the present invention. **FIG. 1B** illustrates the optical element **102** bonded to the LED die **104**.

[0020] The term "transparent" is used herein to indicate that the element so described, such as a "transparent optical element," transmits light at the emission wavelengths of the LED with less than about 50%, preferably less than about 10%, single pass loss due to absorption or scattering. The emission wavelengths of the LED may lie in the infrared, visible, or ultraviolet regions of the electromagnetic spectrum. One of ordinary skill in the art will recognize that the conditions "less than 50% single pass loss" and "less than 10% single pass loss" may be met by various combinations of transmission path length and absorption constant.

[0021] LED die **104** illustrated in **FIGS. 1A and 1B** includes a first semiconductor layer **108** of n-type conductivity (n-layer) and a second semiconductor layer **110** of p-type conductivity (p-layer). Semiconductor layers **108** and **110** are electrically coupled to an active region **112**. Active region **112** is, for example, a p-n diode junction associated with the interface of layers **108** and **110**. Alternatively, active region **112** includes one or more semiconductor layers that are doped n-type or p-type or are undoped. LED die **104** includes an n-contact **114** and a p-contact **116** that are electrically coupled to semiconductor layers **108** and **110**, respectively. Contact **114** and contact **116** are disposed on the same side of LED die **104** in a "flip chip" arrangement. A transparent superstrate **118** coupled to the n layer **108** is formed from a material such as, for example, sapphire, SiC,

GaN, GaP, diamond, cubic zirconia (ZrO2), aluminum oxynitride (AlON), AlN, spinel, ZnS, oxide of tellurium, oxide of lead, oxide of tungsten, polycrystalline alumina oxide (transparent alumina), and ZnO.

[0022] Active region **112** emits light upon application of a suitable voltage across contacts **114** and **116**. In alternative implementations, the conductivity types of layers **108** and **110**, together with respective contacts **114** and **116**, are reversed. That is, layer **108** is a p-type layer, contact **114** is a p-contact, layer **110** is an n-type layer, and contact **116** is an n-contact.

[0023] Semiconductor layers **108** and **110** and active region **112** may be formed from III-V semiconductors including but not limited to AlN, AlP, AlAs, AlSb, GaN, GaP, GaAs, GaSb, InN, InP, InAs, InSb, II-VI semiconductors including but not limited to ZnS, ZnSe, CdSe, ZnO, CdTe, group IV semiconductors including but not limited to Ge, Si, SiC, and mixtures or alloys thereof.

[0024] Contacts **114** and **116** are, in one implementation, metal contacts formed from metals including but not limited to gold, silver, nickel, aluminum, titanium, chromium, platinum, palladium, rhodium, rhenium, ruthenium, tungsten, and mixtures or alloys thereof.

[0025] Although **FIGS. 1A and 1B** illustrate a particular structure of LED die **104**, the present invention is independent of the structure of the LED die. Accordingly, other types of LED configurations may be used instead of the specific configuration shown. Further, the number of semiconductor layers in LED die **104** and the detailed structure of active region **112** may differ. It should be noted that dimensions of the various elements of LED die **104** illustrated in the various figures are not to scale.

[0026] The LED die **104** is mounted to submount **106** via contacts elements **120**, such as solder bumps, pads, or other appropriate elements, such as a layer of solder. Contact elements **120** will be sometimes referred to herein as bumps **120** for the sake of simplicity. Bumps **120** are manufactured from Au, Sn, Ag, Sb, Cu, Pb, Bi, Cd, In, Zn or alloys thereof including AuSn, SnSb, SnCu, SnAg, SnAgBi, InSn, BiPbSn, BiPbCd, BiPbIn, InCd, BiPb, BiSn, InAg, BiCd, InBi, InGa, or other appropriate material with a melting temperature that is greater than the temperature that will be used to bond the optical element **102** to the LED die **104**, but is preferably Au or AuSn. In one implementation, the melting temperature of bumps **120** is greater than 250° C. and preferably greater than 300° C. The submount **106** may be, e.g., silicon, alumina or AlN and may include vias for backside connections.

[0027] The LED die **104** is mounted to the submount **106**, e.g., using thermosonic bonding. For example, during the thermosonic bonding process, the LED die **104** with bumps **120** are aligned with the submount **106** in the desired position while the submount **106** is heated to approximately 150-160° C. A bond force of, e.g., approximately 50-100 gm/bump, is applied to the LED die **104** by a bonding tool, while ultrasonic vibration is applied. If desired other processes may be used, such as thermo-compression, to bond the LED die **104** to the submount **106**. As is well known in the art, with thermo-compression higher temperatures and greater bonding forces are typically required.

[0028] In some embodiments, an underfill may be used with the LED die **104** and submount **106**. The underfill material may have good thermal conductivity and have a coefficient of thermal expansion that approximately matches the LED die **104** and the submount **106**. In another embodiment, a protective side coat, e.g., of silicone or other appropriate material, may be applied to the sides of the LED die **104** and the submount **106**. The protective side coating acts as a sealant and limits exposure of the LED **104** and the bumps **120** to contamination and the environment.

[0029] For more information regarding producing bumps **120** from Au or Au/Sn and for submounts with backside vias and bonding LED dice with Au or Au/Sn bumps to a submount, see U.S. Ser. No. 10/840,459, by Ashim S. Haque, filed May 5, 2004, which has the same assignee as the present disclosure and is incorporated herein by reference. It should be understood, however, that the present invention is not limited to any specific type of submount and that any desired submount configuration may be used if desired.

[0030] After the LED die **104** is mounted to the submount **106**, the optical element **102** is thermally bonded to the LED die **104**. In one embodiment, a layer of bonding material is applied to the bottom surface of the optical element **102** to form transparent bonding layer **122** that is used to bond optical element **102** to LED die **104**. In some embodiments, the transparent bonding layer **122** may be applied to the top surface of the LED die **104**, e.g., to superstrate **118**, (as indicated by the dotted lines **122** in **FIG. 1A**). The bonding layer **122** can be applied to the LED die **104** prior to or after mounting the LED die **104** to the submount **106**. Alternatively, no bonding layer may be used and the optical element **102** may be bonded directly to the LED die **104**, e.g., the superstrate **118**. The transparent bonding layer **122** is, for example, about 10 Angstroms (Å) to about 100 microns (μm) thick, and is preferably about 1000 Å to about 10 μm thick, and more specifically, about 0.5 μm to about 5 μm thick. The bonding material is applied, for example, by conventional deposition techniques including but not limited to spinning, spraying, sputtering, evaporation, chemical vapor deposition (CVD), or material growth by, for example, metal-organic chemical vapor deposition (MOCVD), vapor phase epitaxy (VPE), liquid phase epitaxy (LPE), or molecular beam epitaxy (MBE). In one embodiment, the optical element **102** may be covered with a wavelength converting material **124**, which will be discussed in more detail below.

[0031] In one implementation, the bonding material from which transparent bonding layer **122** is formed from glass such as SF59, LaSF 3, LaSF N18, SLAH51, LAF10, NZK7, NLAF21, LASFN35, SLAM60, or mixtures thereof, which are available from manufactures such as Schott Glass Technologies Incorporated, of Duryea, Pa. and Ohara Corporation in Somerville, N.J. Bonding layer **122** may also be formed from a high index glass, such as (Ge, As, Sb,Ga)(S, Se, Te, Cl, Br) chalcogenide or chalcogen-halogenide glasses, for example.

[0032] In other implementations, bonding layer **122** may be formed from III-V semiconductors including but not limited to GaP, InGaP, GaAs, and GaN; II-VI semiconductors including but not limited to ZnS, ZnSe, ZnTe, CdS, CdSe, and CdTe; group IV semiconductors and compounds including but not limited to Si, and Ge; organic semiconductors, metal oxides including but not limited to oxides of antimony, bismuth, boron, copper, niobium, tungsten, tita-

nium, nickel, lead, tellurium, phosphor, potassium, sodium, lithium, zinc, zirconium, indium tin, or chromium; metal fluorides including but not limited to magnesium fluoride, calcium fluoride, potassium fluoride, sodium fluoride, and zinc fluoride; metals including but not limited to Zn, In, Mg, and Sn; yttrium aluminum garnet (YAG), phosphide compounds, arsenide compounds, antimonide compounds, nitride compounds, high index organic compounds; and mixtures or alloys thereof.

[**0033**] In implementations where the LED die **104** is configured with the n-contact and p-contact on opposite sides of the die **104**, the transparent bonding layer **122** or **122'** may be patterned with, for example, conventional photolithographic and etching techniques to leave the top contact uncovered by bonding material and thus to permit contact to make electrical contact with a metallization layer on the optical element **102**, which may serve as a lead, as is described in U.S. Ser. No. 09/880,204, filed Jun. 12, 2001, by Michael D. Camras et al., entitled "Light Emitting Diodes with Improved Light Extraction Efficiency" having Pub. No. 2002/0030194, which is incorporated herein by reference.

[**0034**] In one implementation, the optical element **102** is formed from optical glass, high index glass, GaP, CZ, ZnS, SiC, sapphire, diamond, cubic zirconia (ZrO2), AlON, by Sienna Technologies, Inc., polycrystalline aluminum oxide (transparent alumina), spinel, Schott glass LaFN21, Schott glass LaSFN35, LaF2, LaF3, and LaF10 available from Optimax Systems Inc. of Ontario, N.Y., an oxide of Pb, Te, Zn, Ga, Sb, Cu, Ca, P, La, Nb, or W, or any of the materials listed above for use as bonding materials in transparent bonding layer **122**, excluding thick layers of the metals.

[**0035**] The transparent optical element **102** may have a shape and a size such that light entering optical element **102** from LED die **104** will intersect surface **102***a* of optical element **102** at angles of incidence near normal incidence. Total internal reflection at the interface of surface **102***a* and the ambient medium, typically air, is thereby reduced. In addition, since the range of angles of incidence is narrow, Fresnel reflection losses at surface **102***a* can be reduced by applying a conventional antireflection coating to the surface **102***a*. The shape of optical element **102** is, for example, a portion of a sphere such as a hemisphere, a Weierstrass sphere (truncated sphere), or a portion of a sphere less than a hemisphere. Alternatively, the shape of optical element **102** is a portion of an ellipsoid such as a truncated ellipsoid. The angles of incidence at surface **102***a* for light entering optical element **102** from LED die **4** more closely approach normal incidence as the size of optical element **102** is increased. Accordingly, the smallest ratio of a length of the base of transparent optical element **102** to a length of the surface of LED die **104** is preferably greater than about 1, more preferably greater than about 2.

[**0036**] After the LED die **104** is mounted on the submount **106**, the optical element **102** is thermally bonded to the LED die **104**. For example, to bond the optical element **102** to the LED die **104**, the temperature of bonding layer **122** is raised to a temperature between about room temperature and the melting temperature of the contact bumps **120**, e.g., between approximately 150° C. to 450° C., and more particularly between about 200° C. and 400° C., and optical element **102** and LED die **104** are pressed together at the bonding temperature for a period of time of about one second to about 6 hours, preferably for about 30 seconds to about 30 minutes, at a pressure of about 1 pound per square inch (psi) to about 6000 psi. By way of example, a pressure of about 700 psi to about 3000 psi may be applied for between about 3 to 15 minutes.

[**0037**] The thermal bonding of the optical element **102** to the LED die **104** requires the application of elevated temperatures. With the use of bumps **120** that have a high melting point, i.e., higher than the elevated temperature used in the thermal bonding process, the LED die **104** may be mounted to the submount **106** before the optical element **102** is bonded to the LED die **104** without damaging the LED die/submount connection. Mounting the LED die **104** to the submount **106** prior to bonding the optical element **102** simplifies the pick and place process.

[**0038**] Bonding an optical element **102** to an LED die **104** is described in U.S. Pub. No. 2002/0030194; Ser. No. 10/633,054, filed Jul. 31, 2003, by Michael D. Camras et al., entitled "Light Emitting Devices with Improved Light Extraction Efficiency"; Ser. No. 09/660,317, filed Sep. 12, 2000, by Michael D. Camras et al., entitled "Light Emitting Diodes with Improved Light Extraction Efficiency; Ser. No. 09/823,841, filed Mar. 30, 2001, by Douglas Pocius, entitled "Forming an Optical Element on the Surface of a Light Emitting Device for Improved Light Extraction" having Pub. No. 2002/0141006, which have the same assignee as the present application and which are incorporated herein by reference. Further, the process of bonding optical element **102** to LED die **104** described above may be performed with devices disclosed in U.S. Pat. Nos. 5,502,316 and 5,376,580, incorporated herein by reference, previously used to bond semiconductor wafers to each other at elevated temperatures and pressures. The disclosed devices may be modified to accommodate LED dice and optical elements, as necessary. Alternatively, the bonding process described above may be performed with a conventional vertical press.

[**0039**] It should be noted that due to the thermal bonding process, a mismatch between the coefficient of thermal expansion (CTE) of optical element **102** and LED die **104** can cause optical element **102** to detach from LED die **104** upon heating or cooling. Accordingly, optical element **102** should be formed from a material having a CTE that approximately matches the CTE of LED die **104**. Approximately matching the CTEs additionally reduces the stress induced in the LED die **104** by bonding layer **122** and optical element **102**. With suitable CTE matching, thermal expansion does not limit the size of the LED die that may be bonded to the optical element and, thus, the optical element **102** may be bonded to a large LED die **104**, e.g., up to 16 mm^2 or larger.

[**0040**] **FIG. 2** illustrates an embodiment in which multiple LED dice **204***a*, **204***b*, and **204***c* (sometimes collectively referred to as LED dice **204**) are mounted on a submount **206**. The LED dice **204** are schematically illustrated in **FIG. 2** without showing the specific semiconductor layers. Nevertheless, it should be understood that the LED dice **204** may be similar to LED die **104** discussed above.

[**0041**] The LED dice **204** are each mounted to submount **206** as described above. Once the LED dice **204** are mounted on submount **206**, individual optical elements **202***a*, **202***b*, and **202***c* are bonded to LED dice **204***a*, **204***b*, and **204***c*, respectively, in a manner such as that described above.

[0042] If desired, the LED dice **204** may be the same type of LED and may produce the same wavelengths of light. In another implementation, one or more of the LED dice **204** may produce different wavelengths of light, which when combined may be used to produce light with a desired correlated color temperature (CCT), e.g., white light. Another optical element (not shown in **FIG. 2**) may be used to cover optical elements **202***a*, **202***b*, and **202***c* and aid in mixing the light.

[0043] **FIG. 3** illustrates an embodiment of an LED device **300** that includes multiple LED dice **304***a*, **304***b*, and **304***c* (sometimes collectively referred to as LED dice **304**) mounted on a submount **306** and a single optical element **302** bonded to the LED dice **304**. The LED dice **304** may be similar to LED die **104** discussed above.

[0044] The use of a single optical element **302** with multiple LED dice **304**, as shown in **FIG. 3**, is advantageous as the LED dice **304** can be mounted close together on submount **306**. Optical components typically have a larger footprint than an LED die to which it is bonded, and thus, the placement of LED dice with separate optical elements is constrained by the size of the optical elements.

[0045] After the LED dice **304** are mounted to the submount, there may be slight height variations in the top surfaces of the LED dice **304**, e.g., due to the differences in the height of the bumps **320** and thickness of the dice. When the single optical element **302** is thermally bonded to the LED dice **304**, any differences in the height of the LED dice **304** may be accommodated by the compliance of the bumps **320**.

[0046] During the thermal bonding process of the optical element **302** to the LED dice **304**, the LED dice **304** may shift laterally due to the heating and cooling of the submount **306**. With the use of some bumps **320**, such as Au, the compliance of the bumps **320** can be inadequate to accommodate lateral shift of the LED dice **304**. Accordingly, the coefficient of thermal expansion of the optical element **302** (CTE_{302}) should approximately match the coefficient of thermal expansion of the submount **306** (CTE_{306}). With an approximate match between CTE_{302} and CTE_{306} any movement of the LED dice **304** caused by the expansion and contraction of the submount **306** will be approximately matched by the expansion and contraction of the optical element **302**. A mismatch between CTE_{302} and CTE_{306}, on the other hand, can result in the detachment of the LED dice **304** from the optical element **302** or other damage to the LED device **300**, during the heating and cooling of the thermal bonding process.

[0047] With the use of sufficiently small LED dice **304**, the thermal expansion of the LED dice **304** themselves during the thermal bonding process may be minimized. With the use of large LED dice **304**, however, the amount of thermal expansion of the LED dice **304** during the thermal bonding process may be large and thus, the CTE for the LED dice **304** also should be appropriately matched to the CTE of the submount **306**.

[0048] The LED dice **304** may be, e.g., InGaN, AlInGaP, or a combination of InGaN and AlInGaP devices. In one implementation, the submount **302** may be manufactured from AlN, while the optical element **302** may be manufactured from, e.g., SLAM60 by Ohara Corporation, or NZK7 available from Schott Glass Technologies Incorporated. In another implementation, an Alumina submount **306** may be used along with an optical element **302** manufactured from sapphire, Ohara Glass SLAH51 or Schott glass NLAF21. In some implementations, a bulk filler **305** between the LED dice **304** and the submount **306** may be used. The bulk filler **305** may be, e.g., silicone or glass. The bulk filler **305** may have good thermal conductivity and may approximately match the CTE of the submount **306** and the dice **304**. If desired, a protective side coating may be applied alternatively or in addition to the bulk filler **305**.

[0049] In one implementation, all of the LED dice **304** may be the same type and produce different or approximately the same wavelengths of light. Alternatively, with an appropriate choice of LED dice **304** and/or wavelength conversion materials, different wavelengths of light may be produced, e.g., blue, green and red. When LED dice **304** are the same type, the CTE for the LED dice **304** will be approximately the same. It may be desirable for the CTE of the LED dice **304** to closely match the coefficient of thermal expansion of the optical element **302** and the submount **306** to minimize the risk of detachment or damage to the LED dice **304** during the thermal bonding process.

[0050] In another implementation, the LED dice **304** may be different types and produce different wavelengths of light. With the use of different types of LED dice, the CTE of the dice can vary making it difficult to match the CTE for all the LED dice **304** with that of the optical element **302** and the submount **306**. Nevertheless, with a judicious choice of the optical element **302** and submount **306** with CTEs that are as close as possible to that of the LED dice **304**, problems associated with detachment of the LED dice **304** or other damage to the device **300** during the thermal bonding process may be minimized. Additionally, with the use of relatively small LED dice **304**, e.g., the area smaller than approximately 1 mm^2, problems associated with thermal bonding a single optical element **302** to multiple dice **304** may also be reduced. The use of a bulk filler **305** may also prevent damage to the device during thermal processing or operation.

[0051] As shown in **FIG. 3**, in one implementation, the optical element **302** may be coated with a wavelength converting material **310**, such as a phosphor coating. In one embodiment, the wavelength converting material **310** is YAG. **FIG. 4** is a flow chart of one implementation of producing such a device. As illustrated in **FIG. 4**, the LED dice **304** are mounted to the submount **306** (step **402**) and the optical element **302** is bonded to the LED dice **304** (step **404**). After the optical element **302** is bonded to the LED dice **304**, a layer of the wavelength converting material **310** is deposited over the optical element **302** (step **406**). The device can then be tested, e.g., by applying a voltage across the active regions of the LED dice **304** and detecting the wavelengths of light produced by the device (step **408**). If the device does not produce the desired wavelengths (step **410**), the thickness of the wavelength converting material is altered (step **411**), e.g., by depositing additional wavelength converting material **310** over the optical element **302** or by removing some of the wavelength converting material by etching or dissolution and the device is again tested (step **408**). The process stops once the desired wavelengths of light are produced (step **412**).

[0052] Thus, the thickness of the wavelength converting material **310** coating is controlled in response to the light produced by the LED dice **304** resulting in a highly reproducible correlated color temperature. Moreover, because the deposition of the wavelength converting material **310** is in response to the specific wavelengths produced by the LED dice **304**, a variation in the wavelengths of light produced by LED dice **304** can be accommodated. Accordingly, fewer LED dice **304** will be rejected for producing light with wavelengths outside a useful range of wavelengths.

[0053] It should be understood that the process of coating the optical element with a wavelength converting material may be applied to the embodiments shown in **FIGS. 1B and 2** as well.

[0054] In another implementation, the coating of wavelength converting material may be placed between the LED die and the optical element, e.g., within, over, or under the bonding layer **322**. **FIG. 5**, by way of example, illustrates an LED die **502** mounted to a submount **504** and bonded to an optical element **506** via bonding layer **508**, where a layer of wavelength converting material **510** is disposed between the bonding layer **508** and the optical element **506**. The wavelength converting material **510** may be bonded to the bottom surface of the optical element **506** by bonding layer **509** prior to or during the bonding the optical element **506** to the LED die **502**. The wavelength converting material **510** may be, e.g., a phosphor impregnated glass or wavelength converting ceramic that is formed independently and then bonded to the LED die **502** and optical element **506**. In some embodiments, the wavelength converting material **510** may be bonded directly to one or both of the LED die **502** and optical element **506**. In one embodiment, the optical element **506**, LED die **502** and wavelength converting material **510** may be bonded together simultaneously. In another embodiment, the wavelength converting material **510** may be bonded first to the optical element **506** and subsequently bonded to the LED die **502**, e.g., where the bonding layer **509** has a higher bonding temperature than the bonding layer **508**. A suitable wavelength converting material, such as a phosphor impregnated glass, is discussed in more detail in U.S. Ser. No. 10/863,980, filed on Jun. 9, 2004, by Paul S. Martin et al., entitled "Semiconductor Light Emitting Device with Pre-Frabricated Wavelength Converting Element", which has the same assignee as the present application and is incorporated herein by reference.

[0055] **FIG. 6** illustrates another embodiment, similar to the embodiment shown in **FIG. 5**, except a wavelength converting material **520** is bonded directly to the LED die **502** (and optionally over the edges of the LED die **502**) prior to or during bonding of the optical element **506**. Thus, as shown in **FIG. 6**, the wavelength converting material **520** is placed between the LED die **502** and the bonding layer **509**. If desired, an additional layer of wavelength converting material may be deposited over the optical element **506** in **FIGS. 5 and 6**, as discussed above.

[0056] In another implementation, the coating of wavelength converting material may be located over the LED die or dice remotely, e.g., on an envelope of glass, plastic, epoxy, or silicone with a hollow space between the envelope and the LED die or dice. If desired, the hollow space may be filled with a material such as silicone or epoxy.

[0057] Related U.S. patent application having Ser. No. application Ser. No. 10/987,241, filed Nov. 12, 2004, entitled "Bonding an Optical Element to a Light Emitting Device", by Michael D. Camras et al, which has the same assignee as the present disclosure, and is incorporated herein by reference.

[0058] **FIG. 7** illustrates an array **600** of LEDs **602**, which are mounted on a board **604**. The board **604** includes electrical traces **606** that are used to provide electrical contact to the LEDs **602**. The LEDs **602** may be phosphor converted devices manufactured, e.g., as described above. The LEDs **602** may each produce white light with different CCTs. By mixing the white light with different CCTs in array **600**, a light with a desired CCT may be produced. If desired, the LEDs **602** may be covered with a transparent element **608** of e.g., glass, plastic, epoxy, or silicone. The transparent element **608** may be filled, e.g., with epoxy or silicone, which assists the extracting and mixing of the light and to protect the LEDs **602**. It should be understood that array **600** may include any number of LEDs **602** and that if desired, one or more of the LEDs may produce non-white light. Moreover, if desired, a plurality of the LEDs **602** may be bonded to a single optical element **603**, or one or more of the LEDs **602** may not include optical element **603**.

[0059] As illustrated in **FIG. 7**, individual or groups of LEDs **602** may be independently controlled, e.g., by controller **610**, which is electrically connected to the traces **606** on the board **604**. By independently controlling LEDs **602** or groups of LEDs **602**, a high color rendering, e.g., over 85, with a constant brightness may be achieved. Further, the white points produced by the array **600** may be tuneable over a large range of CCT, e.g., between 3000K and 6000K. By way of example, a number of phosphor-converted (PC) blue LEDs that produce white light may be used in combination with LEDs with different colors, such as blue, cyan, amber and red to produce a light with a desired CCT. As shown in the graph of **FIG. 8**, the phosphor converted blue LEDs generates light with a broad spectrum **702** in the green area in combination with a peak in the blue region. The thickness of the phosphor may be tuned to produce approximately equal peak values for both the green and blue parts of the spectrum. **FIG. 9** shows a CIE chromaticity diagram for the spectrum shown in **FIG. 8**, which illustrates the x and y color coordinates **752** above the black bodyline **754**. Of course, PC LEDs that produce spectra having peaks in other area may be used if desired. Alternatively, if desired, PC LEDs that produce different spectra, i.e., white light having different CCTs may be used together.

[0060] A majority of the LEDs **602** in the array **600** of **FIG. 7** may be PC LEDs that generate the spectrum shown in **FIG. 8**. The remaining LEDs **602** shown in **FIG. 7** may be color LEDs, e.g., LEDs that produce blue, cyan, amber and red. The brightness of the color LEDs may be adjusted by controller **610**. The combination of fully powered PC LEDs with colored LEDs generates an approximately continuous spectrum, as illustrated in **FIG. 10**. **FIG. 10** shows a graph with the spectrum **702** from the PC LEDs along with spectra **704**, **706**, **708** and **710** from the blue, cyan, amber and red colored LEDs combined to form spectrum **720**. As illustrated in the portion of the CIE chromaticity diagram shown in **FIG. 11**, by varying the brightness of the colored LEDs, an area that covers part of the black body line **764** can be obtained. By way of example, one embodiment that included 29 PC LEDs and 12 color LEDs, e.g., 3 blue, 3 cyan, 3 amber, and 3 red, is capable of producing a bright-

ness of 800 lumen with a color rendering between 85 and 95 and a CCT between 3200K and 5800K. **FIG. 12** illustrates a portion of the CIE chromaticity diagram that illustrates variable CCT values for an array of 29 PC LEDs and 12 color LEDs. Of course, any number of PC LEDs and color LEDs may be used.

[0061] Although the present invention is illustrated in connection with specific embodiments for instructional purposes, the present invention is not limited thereto. Various adaptations and modifications may be made without departing from the scope of the invention. Therefore, the spirit and scope of the appended claims should not be limited to the foregoing description.

What is claimed is:

1. An apparatus comprising:

at least one phosphor converted light emitting device that produces light with a broad spectrum;

a plurality of color light emitting devices that produce light with a narrow spectrum; and

a controller for controlling the brightness of the light produced by the color light emitting devices, wherein the combination of the broad spectrum light produced by the at least one phosphor converted light emitting device and the narrow spectra light from the brightness controlled plurality of color light emitting devices produces a resulting spectrum that is more continuous than the broad spectrum produced by the at least one phosphor converted light emitting devices.

2. The apparatus of claim 1, further comprising a board, the at least one phosphor converted light emitting device and the plurality of color light emitting devices are mounted on the board.

3. The apparatus of claim 1, wherein there is a greater number of phosphor converted light emitting devices than color light emitting devices.

4. The apparatus of claim 3, wherein there is over twice as many phosphor converted light emitting devices as color light emitting devices.

5. The apparatus of claim 1, wherein the color light emitting devices produce blue, cyan, amber and red light.

6. The apparatus of claim 1, wherein the controller individually controls the brightness of the color light emitting devices to vary the correlated color temperature of the resulting spectrum.

7. A method comprising:

providing at least one phosphor converted light emitting device that produces light with a broad spectrum;

providing a plurality of color light emitting devices, each of which produces light with a narrow spectrum;

mixing the light produced by the at least one phosphor converted light emitting device and the plurality of color light emitting devices to produce light with a resulting spectrum that is more continuous than the broad spectrum produced by the at least one phosphor converted light emitting devices;

controlling the brightness of the light produced by the plurality of color light emitting devices to vary the correlated color temperature of the resulting spectrum.

8. The method of claim 7, further providing a board and mounting the at least one phosphor converted light emitting device and the plurality of color light emitting devices on the board.

9. The method of claim 7, wherein a greater number of phosphor converted light emitting devices are provided than color light emitting devices.

10. The method of claim 9, wherein over twice as many phosphor converted light emitting devices as color light emitting devices are provided.

11. The method of claim 7, wherein the color light emitting devices produce blue, cyan, amber and red light.

12. The method of claim 7, wherein the brightness of the light produced by each color light emitting device is controlled separately to vary the correlated color temperature.

13. The method of claim 7, wherein the brightness of each different colored light produced by the color light emitting devices is controlled separately to vary the correlated color temperature.

14. A method comprising:

providing a plurality of phosphor converted light emitting devices that produce light with a broad spectrum, the phosphor converted light emitting devices producing light with different correlated color temperature;

arranging the plurality of phosphor converted light emitting devices in an array; and

covering the array of phosphor converted light emitting devices with an optical element that assists mixing of the light with different correlated color temperatures to produce light with a desired correlated color temperature.

15. The method of claim 14, wherein the optical element is bonded to the phosphor converted light emitting devices.

16. The method of claim 14, wherein the optical element is a dome mounted over the phosphor converted light emitting devices and filled with an encapsulant.

17. The method of claim 14, wherein arranging the plurality of phosphor converted light emitting devices comprises mounting the plurality of phosphor converted light emitting devices to a board.

18. The method of claim 14, the method further comprising:

providing a plurality of color light emitting devices, each of which produces light with a narrow spectrum;

arranging the plurality of color light emitting devices in the array with the plurality of phosphor converted light emitting devices.

19. The method of claim 18, further comprising controlling the brightness of the light produced by the plurality of color light emitting devices to vary the correlated color temperature of the resulting spectrum.

20. An apparatus that produces broadband light with a desired correlated color temperature, the apparatus comprising:

an array of a plurality of phosphor converted light emitting devices that produce light with a broad spectrum with different correlated color temperatures; and

an optical element disposed over the array of the plurality of phosphor converted light emitting devices, the optical element mixing the light with different correlated color temperatures to produce light with the desired correlated color temperature.

21. The apparatus of claim 20, wherein the optical element is bonded to the phosphor converted light emitting devices.

22. The apparatus of claim 20, wherein the optical element is a dome mounted over the phosphor converted light emitting devices and filled with an encapsulant.

23. The apparatus of claim 20, further comprising a board to which the array of the plurality of phosphor converted light emitting devices is mounted.

24. The apparatus of claim 20, wherein the array further comprises a plurality of color light emitting devices.

25. The apparatus of claim 24, the apparatus further comprising a controller for controlling the brightness of the light produced by the plurality of color light emitting devices to vary the correlated color temperature to the desired correlated color temperature.

* * * * *