June 18, 1935. S. DUBITSKY ET AL 2,005,457

DOORCHECK

Filed Sept. 14, 1934 4 Sheets-Sheet 1

FIG. 1.

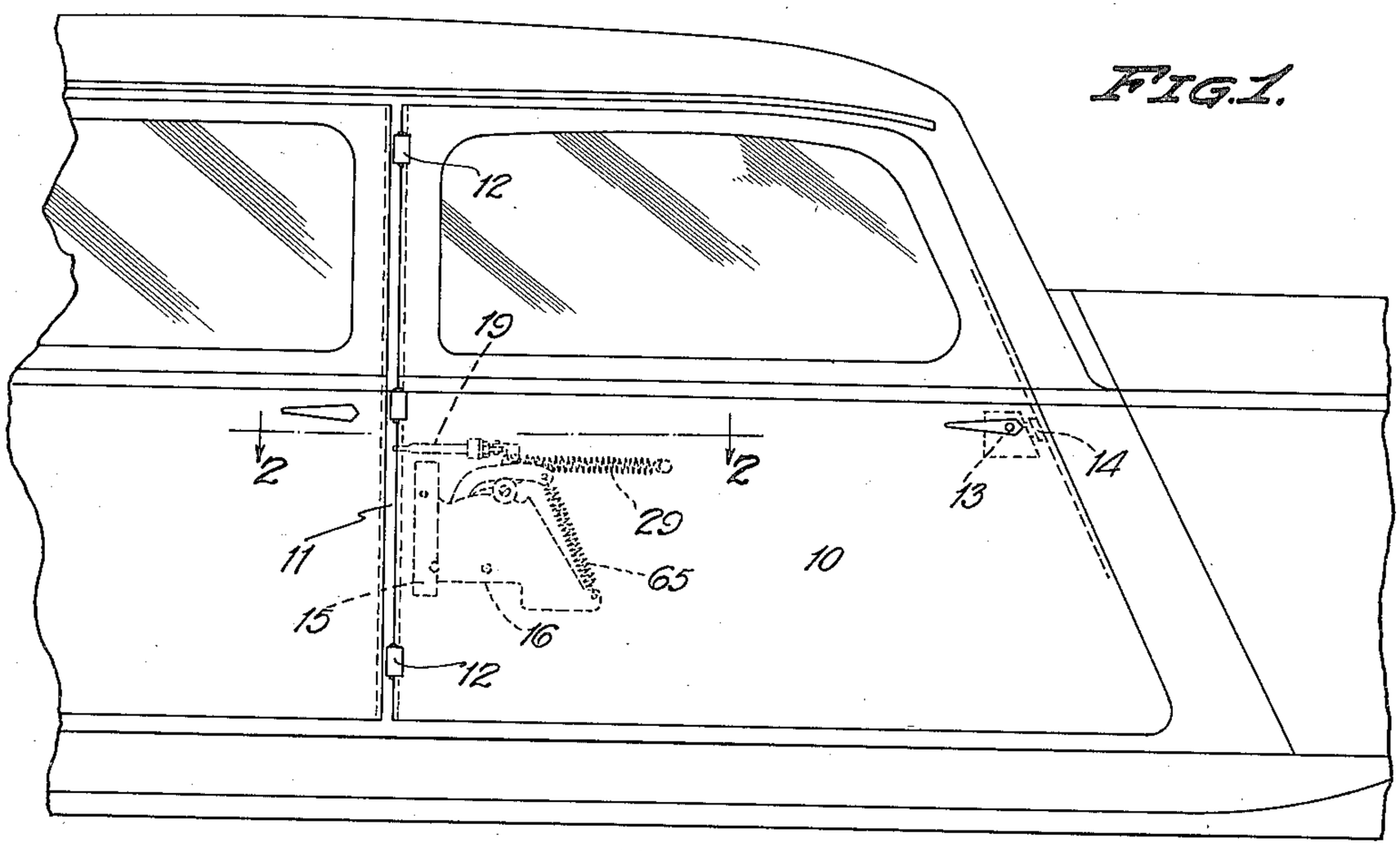

FIG. 2.

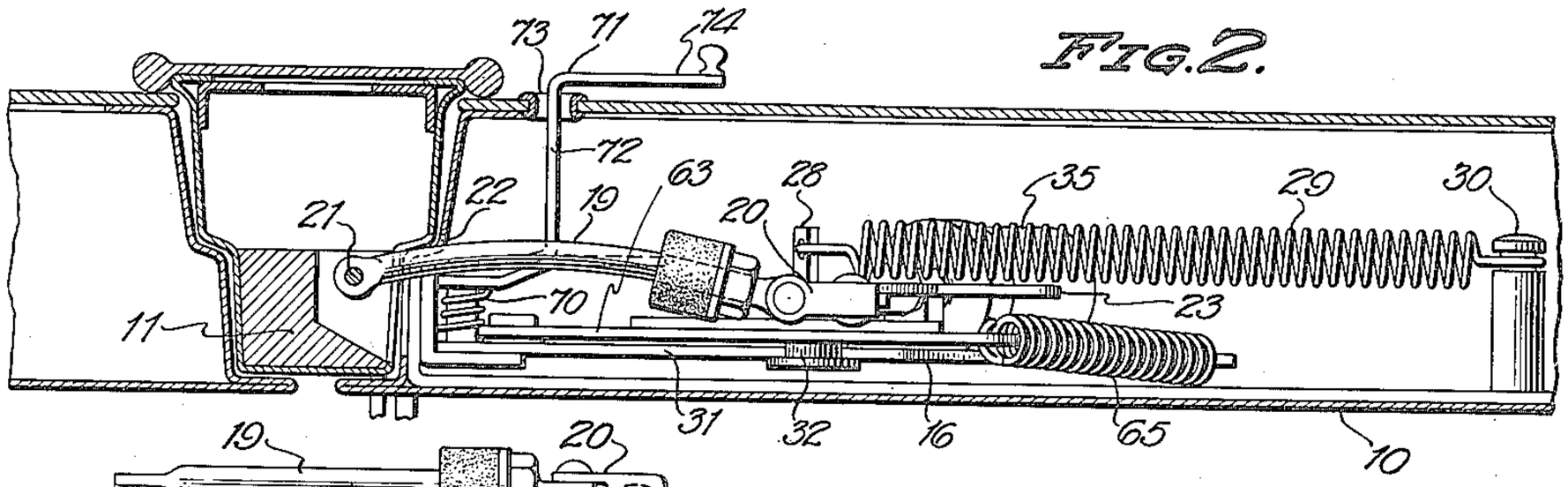

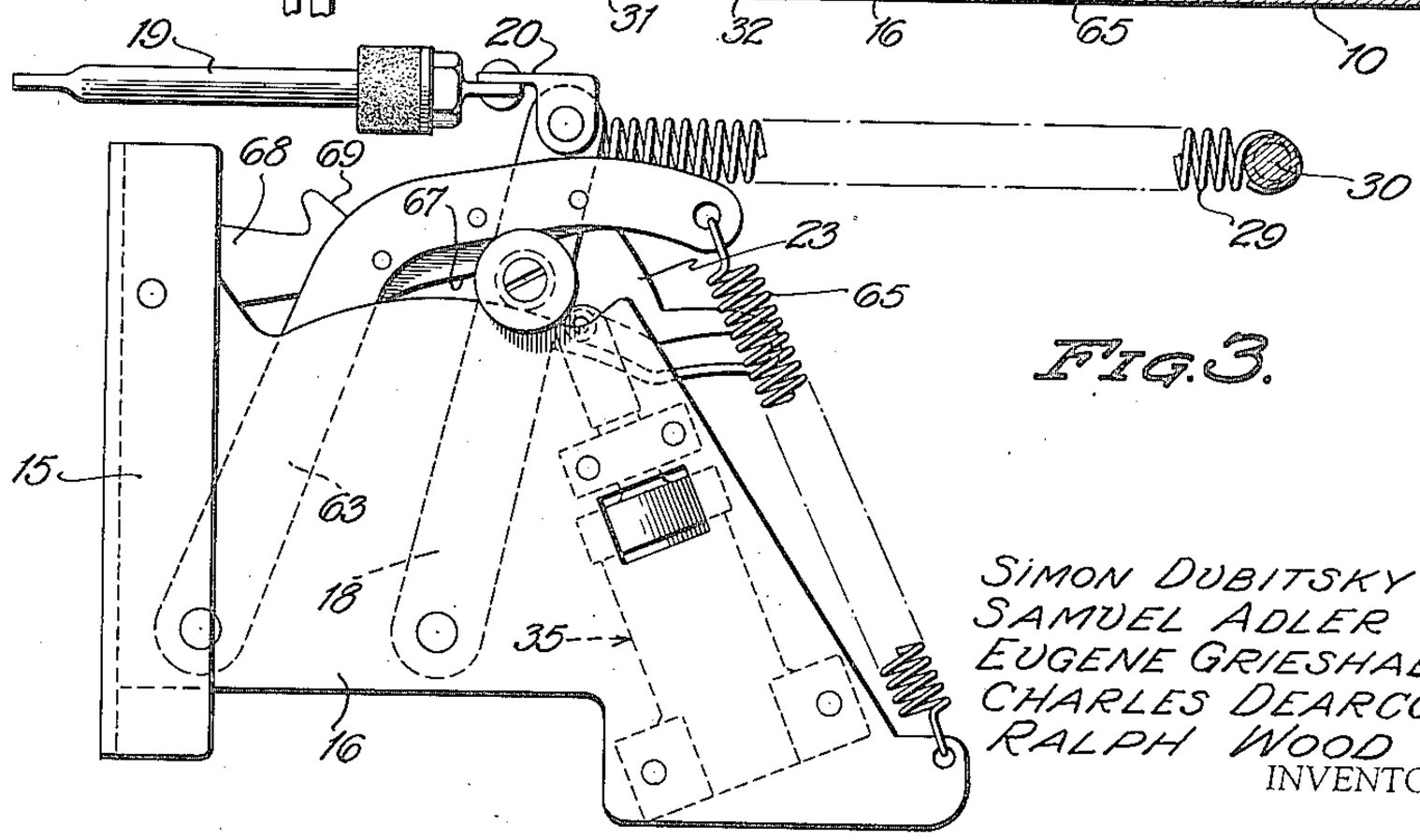

FIG. 3.

SIMON DUBITSKY
SAMUEL ADLER
EUGENE GRIESHABER
CHARLES DEARCOPP
RALPH WOOD
INVENTORS

WITNESS:

S. Benton Lusby.

BY Ely & Pattison

ATTORNEYS

June 18, 1935.

S. DUBITSKY ET AL

2,005,457

DOORCHECK

Filed Sept. 14, 1934

4 Sheets-Sheet 2

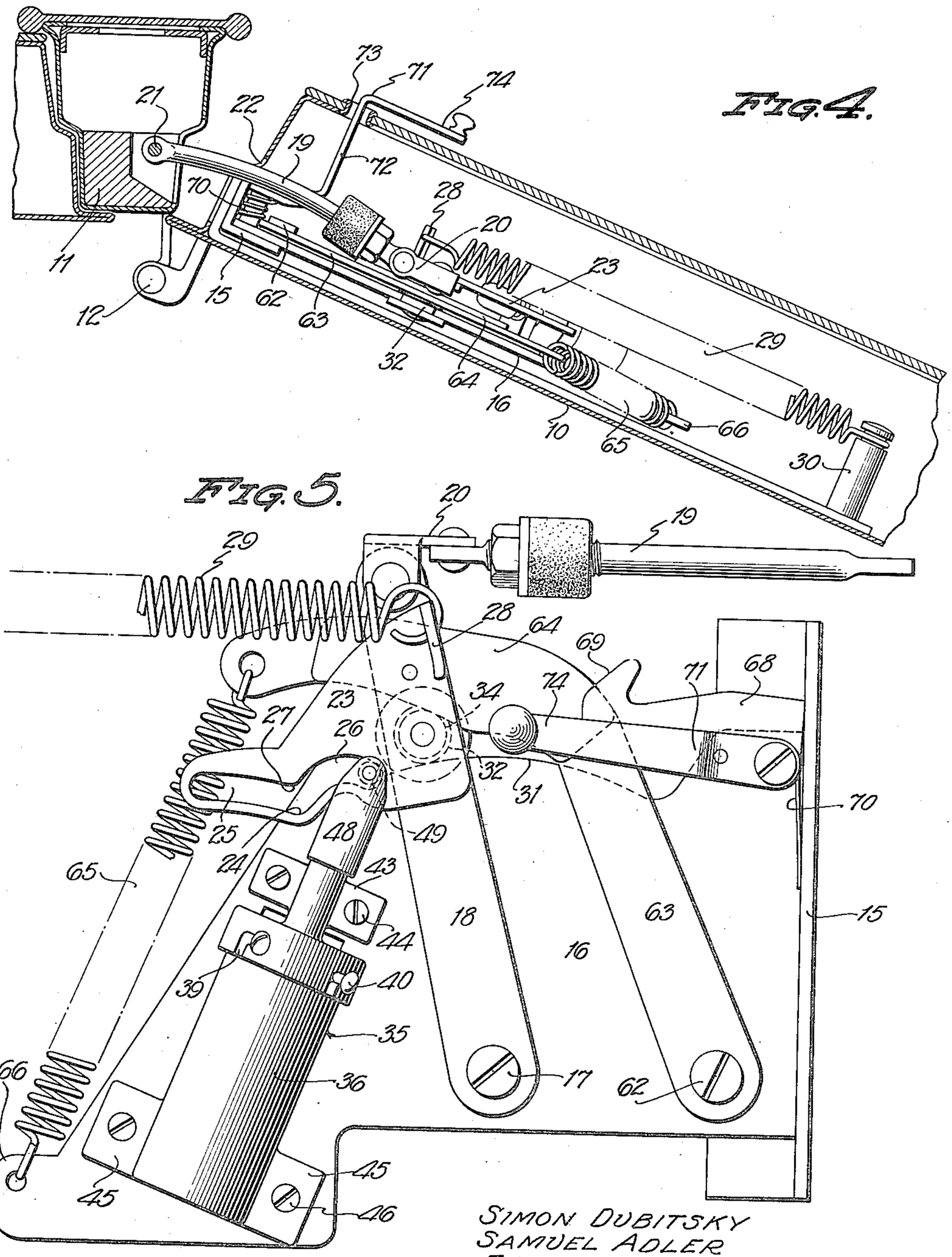

FIG. 4.

FIG. 5.

SIMON DUBITSKY
SAMUEL ADLER
EUGENE GRIESHABER INVENTORS
CHARLES DEARCOPP
RALPH WOOD

BY Ely & Pattison

ATTORNEYS

WITNESS:

F. Dexter Lusby.

June 18, 1935. S. DUBITSKY ET AL 2,005,457

DOORCHECK

Filed Sept. 14, 1934 4 Sheets-Sheet 3

FIG. 6.

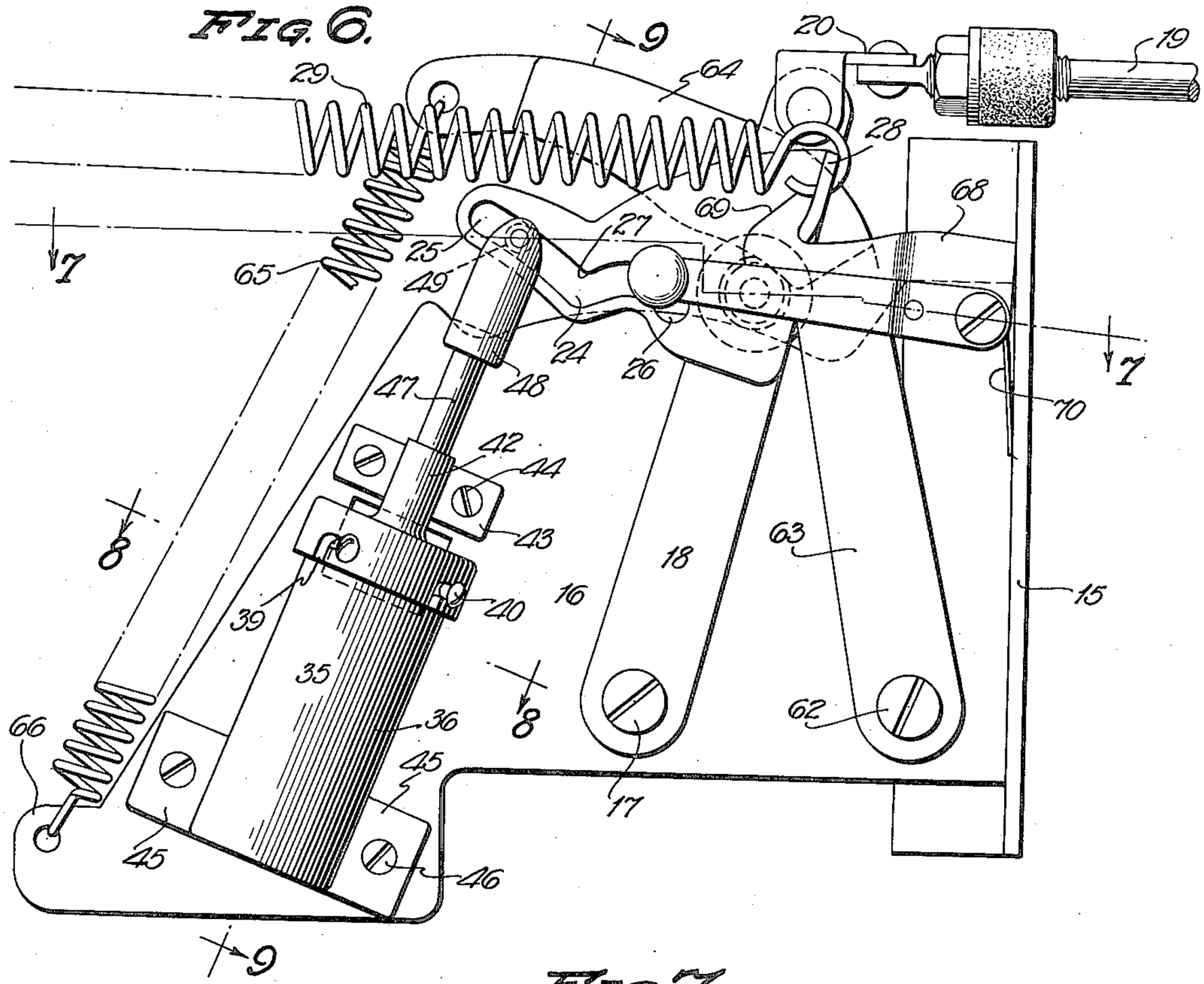

FIG. 7.

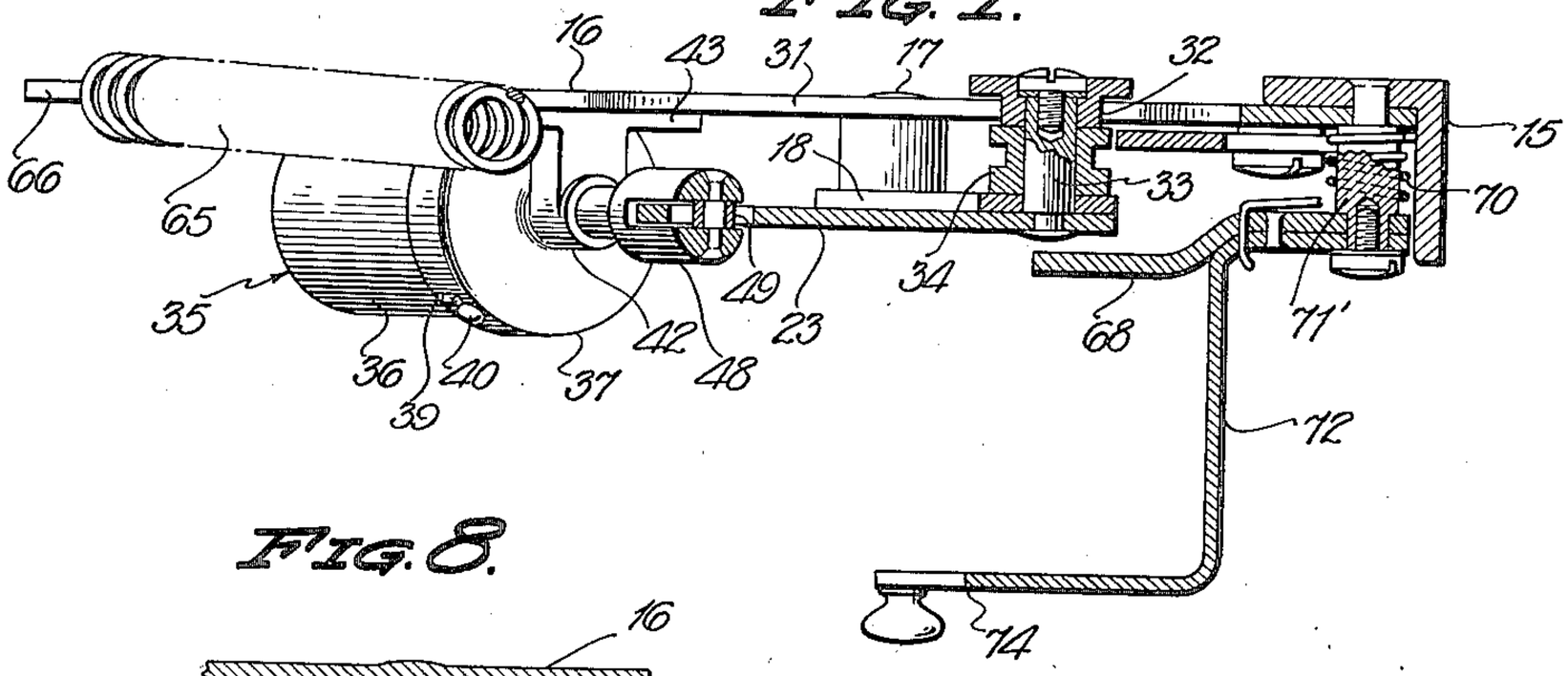

FIG. 8.

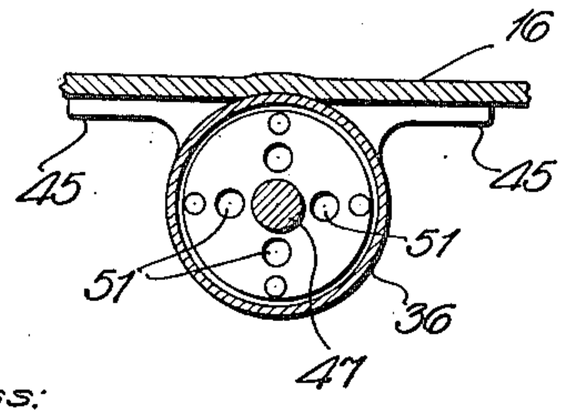

WITNESS:

G. Bayton Lusby.

SIMON DUBITSKY
SAMUEL ADLER
EUGENE GRIESHABER INVENTORS
CHARLES DEARCOPP
RALPH WOOD.

BY Ely & Pattison.

ATTORNEYS

June 18, 1935.

S. DUBITSKY ET AL

2,005,457

DOORCHECK

Filed Sept. 14, 1934

4 Sheets-Sheet 4

FIG. 9.

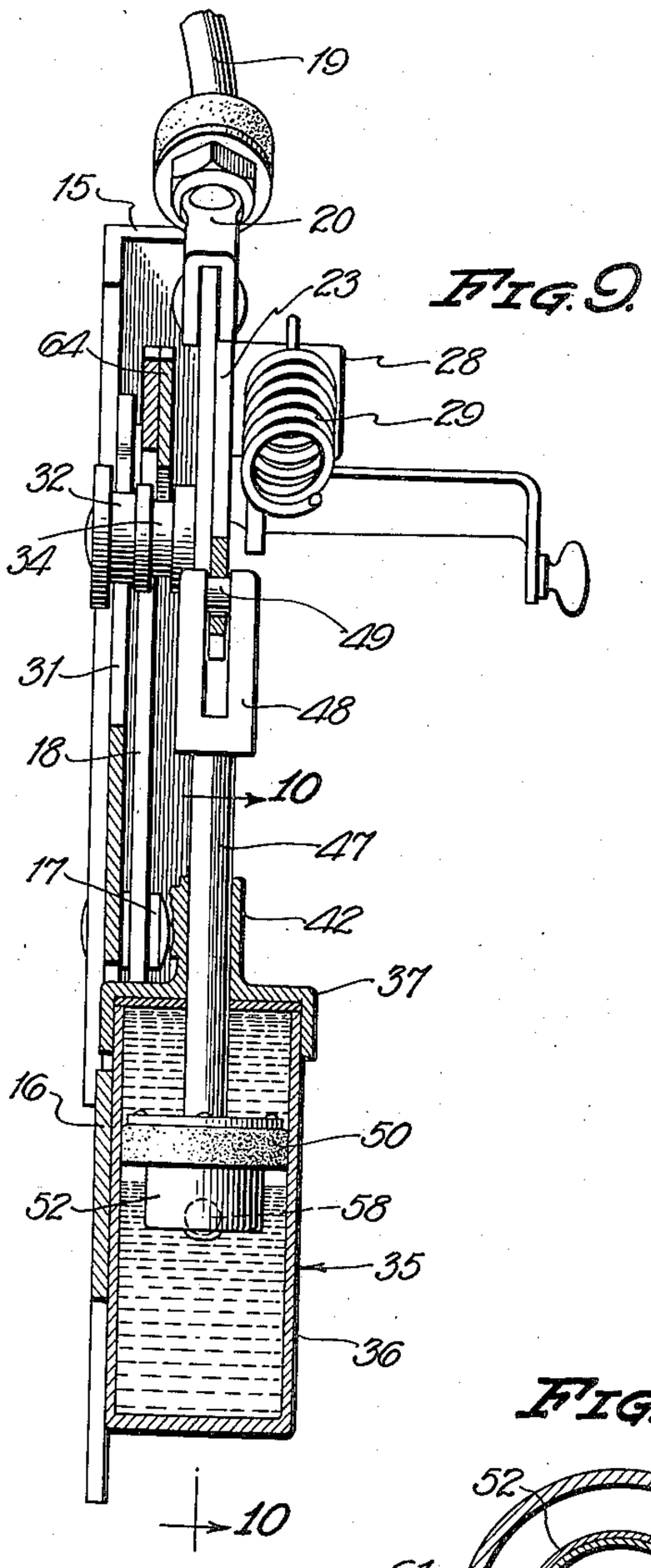

FIG. 10.

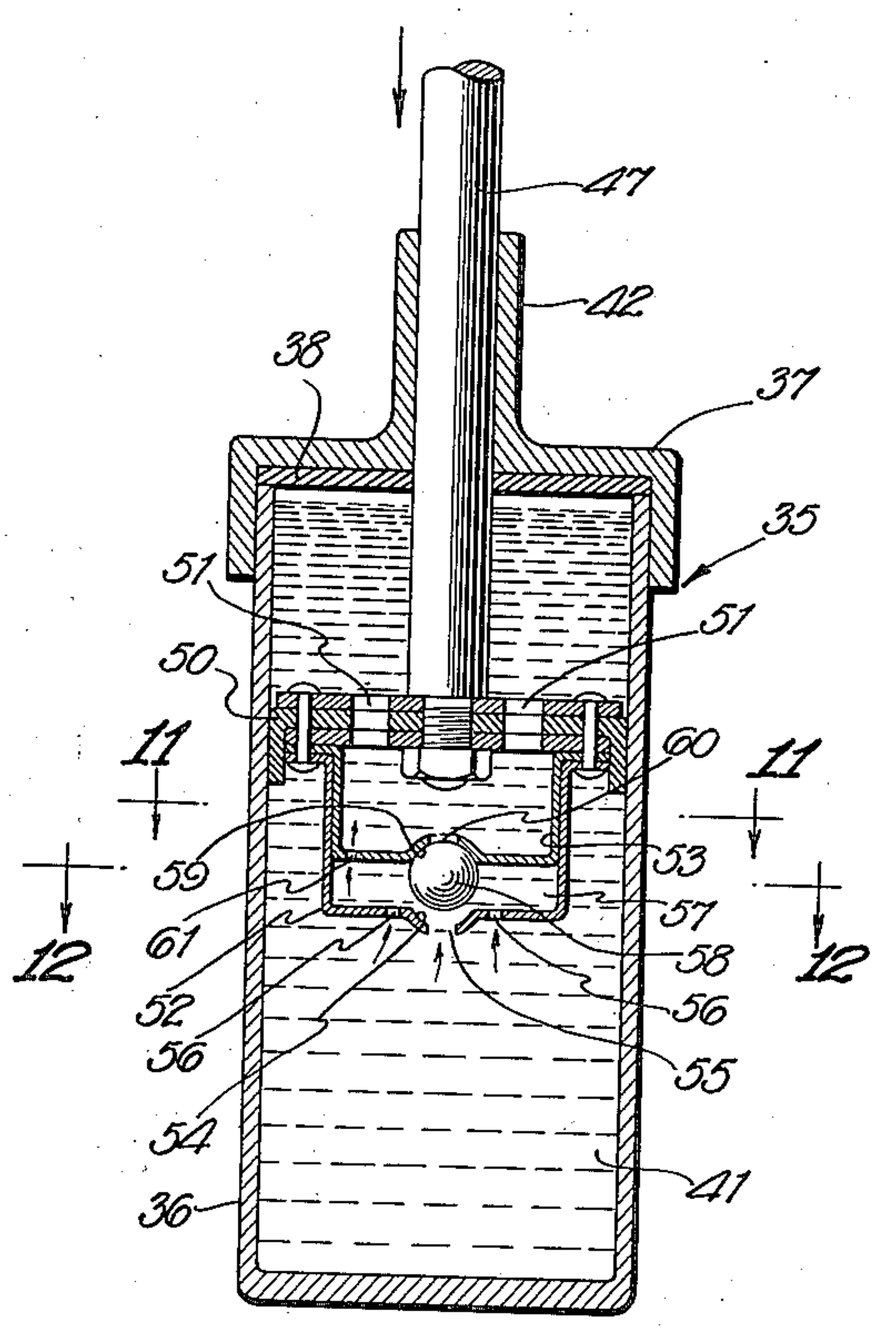

FIG. 11.

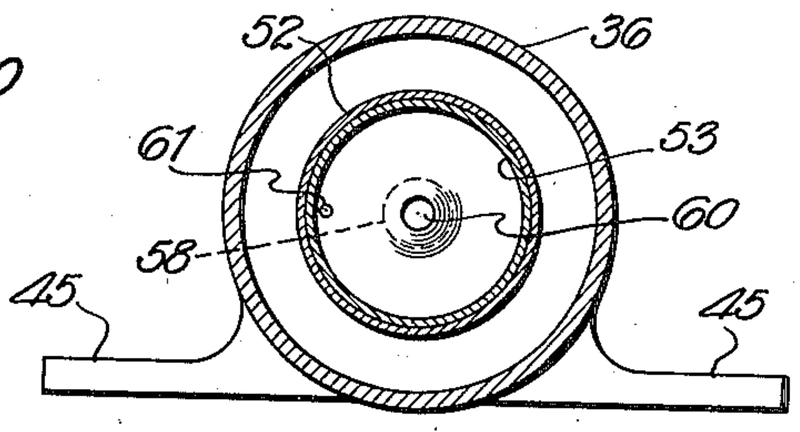

FIG. 12.

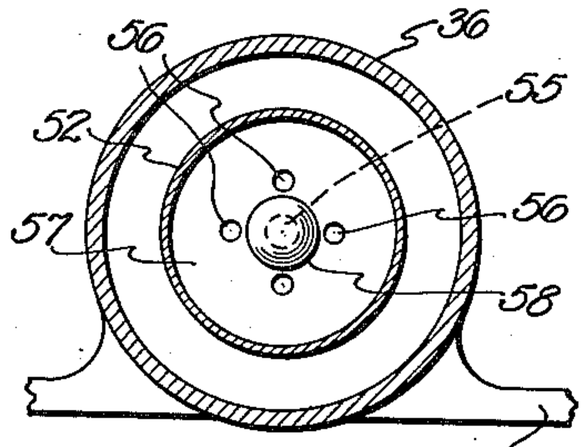

SIMON DUBITSKY
SAMUEL ADLER
EUGENE GRIESHABER
CHARLES DEARCOPP
RALPH WOOD.

INVENTORS

WITNESS:

G. Lepton Lusby.

BY Ely & Pattison.

ATTORNEYS

Patented June 18, 1935 2,005,457

UNITED STATES PATENT OFFICE

2,005,457

DOORCHECK

Simon Dubitsky, Glendale, Long Island, Samuel Adler, Bronx, Eugene Grieshaber and Charles Dearcopp, Glendale, Long Island, and Ralph Wood, South Ozone Park, N. Y.

Application September 14, 1934, Serial No. 743,950

5 Claims. (Cl. 16—70)

This invention relates to improvements in door checks.

The primary object of the invention resides in a door check especially adaptable for use upon automobile doors but which may be employed for performing the same functions when associated with any other type of swinging closure. The device performs the following functions, namely, the checking of a door during substantially its entire closing movement; the forcible acceleration of the closing movement of the door as it nears the completion of such closing movement to effect a positive engagement of the door latch with its keeper; and for releasably holding the door in a fully opened position when swung thereto. The advantages of a door check of this kind are apparent as it avoids the necessity of manually closing a door and seeing that it fully closes and that the door latch is securely engaged with its keeper to avoid accidental swinging movement of the door.

Another feature of the invention is to provide a door check which is set in a door or door casing and is invisible from either side of the door, and in which the parts are capable of long wear to avoid frequent repair, adjustment, or replacement.

With these and other objects in view, the invention resides in the novel construction, combination and arrangement of parts, the essential features of which are hereinafter fully described, are particularly pointed out in the appended claims, and are illustrated in the accompanying drawings, in which:

Figure 1 is a side elevational view of an automobile door with the invention in use thereon.

Figure 2 is an enlarged horizontal sectional view on the line 2—2 of Figure 1.

Figure 3 is an elevational view of the door check per se looking at one side thereof, the parts being in normal door closing position.

Figure 4 is a view similar to Figure 2 but showing the door in a partially open position.

Figure 5 is an enlarged elevational view looking at that side of the device opposite to that shown in Figure 3.

Figure 6 is a view similar to Figure 5, but showing the position of the parts when in door opening position.

Figure 7 is a horizontal sectional view on the line 7—7 of Figure 6.

Figure 8 is a detail horizontal sectional view on the line 8—8 of Figure 6.

Figure 9 is a transverse sectional view on the line 9—9 of Figure 6.

Figure 10 is a vertical longitudinal sectional view through the dash pot showing the position of the ball valve upon the down stroke of the piston.

Figure 11 is a transverse sectional view on the line 11—11 of Figure 10.

Figure 12 is a horizontal sectional view on the line 12—12 of Figure 10.

Referring to the drawings by reference characters, the numeral 10 designates a door hinged at one side of a door casing or frame 11, the hinges being shown at 12, while mounted in the opposite side of the door is a manually actuated latch mechanism 13, the latch bolt of which is received in the usual keeper 14 in the adjacent side of the door casing 11. In the drawing, we have illustrated the door 10 as being that of an automobile, but it will be understood that the invention about to be described may be used in association with any other type of swinging door with equal results.

The door 10 in this instance is of hollow construction to receive the door check mechanism, but in instances where the door is of a solid construction, the same may be mortised to provide a recess for accommodating the door check device now to be described. The door check includes a vertical angle bracket 15 which is fixedly secured to the hinge side of the door as shown in Figures 2 and 4, and the said bracket supports an outwardly extending plate 16, which supports the mechanism now to be described.

Pivoted to the plate 16 as at 17 is a lever 18 to the top of which is connected an adjustable link 19 through a flexible connection 20. The link 19 is slightly bowed in plan as shown in Figures 2 and 4 and is pivotally connected as at 21 to the door frame 11, the said link extending through a slot 22 in the hinge side of the door 10.

Fixedly attached to the lever 18 and extending therefrom, is a cam plate 23, the same being provided with a cam slot 24 divided into two branches 25 and 26 which communicate at a sharp bend 27 in the slot 24. The cam plate 23 is also provided with an outwardly extending ear 28 to which one end of a spring 29 is connected, the opposite end of the spring 29 being fixed to a post 30 extending inwardly from the outer wall of the door 10 as seen in Figure 4 of the drawings. It will be seen that as the door 10 swings to an open position, a pull is exerted on the lever 18 through the link 19, thus building up a tension upon the spring 29, which tension is sufficient to swing the door from an open to a partially closed position.

The top edge of the plate 16 is curved as at 31

on an arc struck from the axis of the pivotal movement of the lever 18 and movable over this curved edge is a grooved roller 32 rotatably supported upon a stub shaft 33 fixed to the lever 18. The stub shaft 33 also supports a grooved roller 34 interposed between the roller 32 and the lever 18 for the purpose to be hereinafter explained.

Associated with the cam plate 23 is a dash pot mechanism 35 which includes a cylinder 36 fixedly secured to the plate 16 on the same side thereof as the cam plate 23. The cylinder 36 is closed at its lower end and open at its other end, but which open end is closed by a cap 37, there being a sealing gasket 38 between the open end of the cylinder and the cap 37. The cap 37 may be removably secured to the cylinder 36 in any desired manner, but in the present instance, the flange of the cap is provided with bayonet slots 39, the closed ends of which receive pins 40 extending outwardly from the side wall of the cylinder. Thus it will be seen that by turning the cap 37 relative to the cylinder, the said cap may be secured in position or removed to facilitate access to the inside of the cylinder for charging the same with a liquid which in this instance is shown as oil 41. The cap 37 is provided with a sleeve-like bearing 42 from which attaching ears 43 extend and which ears lie flat against the plate 16 and have openings therein for the passage of fastening screws 44. It might here be mentioned that the cylinder 36 is also provided with ears 45 fitting flat against the plate 16 through which screws 46 pass for securing the cylinder in a rigid position, the screws 44 and 46 being removable when it is desired to separate the cap 37 from the cylinder 36.

Slidable through the sleeve bearing 42 is a piston rod 47, the outer end of which is provided with a bifurcated head 48 which supports within the furcations, a roller 49 which is movable in the cam slot 24 of the cam plate 23. The inner end of the piston rod 47 carries a piston head 50, the same being provided with a series of openings or passages 51. The underside of the piston head 50 fixedly supports a pair of nested cup shaped casings 52 and 53, the outer casing 52 being provided with a concavity 54 which constitutes a ball-valve seat, the said cavity having an opening or passage 55 therein. The lower wall of the outer casing 52 beyond the concavity 54 is provided with a series of small openings 56. The inner casing 53 is shallower in depth than the outer casing 52 so that the bottom of the same terminates in spaced relation to the bottom of the outer casing in order to provide a chamber 57 in which a ball valve 58 is arranged. The bottom wall of the casing 53 is also provided with a ball valve seat 59, the same having an opening 60 therein which is adapted to be closed by the ball valve 58 during the downward movement of the piston. The bottom wall of the inner casing is provided with a single small opening 61 which establishes communication between the chamber 57 and the inner casing 53. It will thus be seen that upon the down stroke of the piston as shown in Figure 10 of the drawings, the ball valve 58 closes the opening 60, thus necessitating the passage of the oil on one side of the piston through the restricted opening 61, thus retarding the speed of movement of the piston. However, upon the upward movement of the piston, the ball valve 58 engages the seat 54, thus closing the passage 55, but there is a relatively free flow of liquid through the openings 56, 60 and 61 to enable the more rapid movement of the piston. Thus it will be seen that the dash-pot mechanism permits of the relatively free movement of the piston in an outward direction whereas inward movement of the same is retarded by the restricted flow of the liquid from one side of the piston head to the other.

Pivoted to the plate 16 as at 62 at a point nearer the bracket 15 than the lever 18, is a lever 63, the said lever being on a plane out of the path of the movement 18 and having its free end bent angularly or substantially hook shaped as at 64 so as to extend above and beyond the plate 16. The extreme free end of the lever 63 has one end of a spring 65 secured thereto, while the opposite end of the spring is secured to an ear 66 formed integral with the plate 16. The hook shaped portion 64 of the lever 63 is provided with a cam plate having a cam surface 67 which engages in the groove of the grooved roller 34 and which lever serves to impart the final slamming movement to the door by reason of the tension of the spring 65 after the spring 29 has by its tension moved the door to a partially closed position.

In practice, assume that the parts of the door check device are in normal position as shown in Figures 2, 3 and 5 of the drawings, the door 16 being in a closed position. Upon unlatching of the door and the swinging of the same to an open position, the link 19 will exert a pull upon the lever 18 and during such movement, the cam slot 24 in the cam plate 23 causes the piston of the dash pot mechanism to move outwardly, it being previously mentioned that upon outward movement of the piston, the same has relatively free sliding movement. As the door opens, the tension of the spring 29 is increased and the roller 34 pushes against the cam plate on the hook end of lever 63 and imparts movement thereto, which movement of the lever 63 increases the tension of the spring 65. The various parts now assume the position shown in Figure 6 of the drawings. Upon release of the door while in an open position, the tension of the spring 29 exerts a pull upon the lever 18, but the movement of the piston of the dash-pot mechanism is retarded due to the restricted flow of the liquid from one side of the piston head to the other. Thus the closing movement of the door is relatively slow and gradual until such time as the roller 49 passes the bend 27 in the cam slot 24. At this time, the door is near the completion of its closing movement and the function of the lever 63 now comes into play. As the roller 49 enters the branch 26 of the cam slot, the check action of the dash pot is spent as the piston has completed its inward movement, by entering the branch 26 permitting free movement of the lever 18. With the check action released, the tension of the spring 65 exerts a pull upon the lever 63 causing the said lever to move the lever 18 to its final position and with such force as to impart a slamming action to the door. This final force is produced by reason of the wedging action between the rollers 32 and 34 which respectively engage the cam or lever 63 and the arcuate shaped track or rail formed on top of the plate 16. As the door is given a final slamming movement, the same will positively close to enable the bolt of the latch mechanism 13 to engage its keeper 14 to hold the door in a fully closed position.

In addition to the above mentioned feature, we also provide a means for holding the door in a fully opened position when moved thereto. This means includes a hook shaped catch 68, the inclined surface 69 on the bill thereof being held

in the path of movement of the ear 28 by means of a spring 70, a portion of which encircles the pivot 71 of the catch 68, while one of the ends of the spring abuts one of the flanges of the angle bracket 15, while the other end of the spring is brought under the hook catch 68 to exert an upward tension upon the catch. Upward movement of the catch is limited by engagement of the tail end thereof with one of the flanges of the angle bracket 15 as best seen in Figure 6 of the drawings. Thus it follows, that when the door is swung to a fully opened position, the lever 18 moves to the position shown in Figure 6, and as it nears such position, the ear 28 depresses the catch member 68 permitting the bill of the catch to ride under the ear 28 and engage therewith.

We also provide means for releasing the hook catch 68 when it is desired to permit the door to swing to closed position. The releasable means includes an arm 71 which is fixed to the hook catch 68 and extends at right angles thereto to pass through an opening 73 provided in the inner wall of the door 10. A crank handle 74 is formed on the extending end of the arm 72 to permit actuation of the same from the inside of the door. Thus by pushing downwardly upon the crank portion 74, the hook catch 68 may be released from its engagement with the ear 28 and the door is free to be moved to closed position by the door check mechanism hereinbefore described.

While the door check mechanism has been shown as mounted within a door, the same may be reversed by mounting the mechanism within a door casing and connecting the free end of the link 19 with the door, or in other words reverse the position of the door check mechanism.

While we have shown and described what we deem to be the most practical embodiments of our invention, we wish it to be understood that such changes and alterations as come within the scope of the appended claims may be resorted to if desired.

Having thus described the invention, what we claim as new and desire to secure by Letters Patent of the United States, is:—

1. A door check device comprising a flat supporting plate, a door actuated lever pivoted to said plate, said plate being provided with a curved track concentric to the pivotal axis of said lever, a roller means connected to said lever for movement over said track, a spring having one of its ends connected to said lever and adapted to have its other end secured to a fixed part whereby movement of said lever to door opening position will gradually increase the tension of said spring sufficient to move said lever in a door closing direction, check means acting upon said lever during a portion of its door closing movement and being rendered inoperative as the lever nears its full return movement, a second lever pivoted to said supporting plate, a cam surface provided on said lever, a normally tensioned spring connected to said second lever and holding the cam surface thereof against said roller means, whereby the tension of said tensioned spring and cam surface acts with said track to impart a wedging action to said roller means as the door actuated lever nears the limit of its door closing movement to forcibly actuate said door actuated lever.

2. In a door check device, a door actuated lever, spring means acting upon said lever to urge the same in a door closing direction, a roller carried by said lever, check means acting upon said lever to retard the rapid movement of the same during a portion of its door closing movement and being rendered inoperative as the lever nears the limit of its closing movement, cam elements engaging said roller and coacting to form a wedge therefor when said check means is rendered inoperative, and spring means acting upon one of said cam elements to forcibly wedge said roller and cause said door actuated lever to rapidly move to a fully returned position.

3. In a door check device, a door actuated lever, spring means acting upon said lever to urge the same in a door closing direction, a roller carried by said lever, check means acting upon said lever to retard the rapid movement of the same during a portion of its door closing movement and being rendered inoperative as the lever nears the limit of its closing movement, a fixed cam element, a pivoted cam lever coacting with said fixed cam element to form a wedge for said roller and engageable with said roller, and spring means acting upon said pivoted cam lever to forcibly wedge said roller and cause said door actuated lever to rapidly move to a fully returned position.

4. A door check device comprising a support member, a door actuated lever pivoted to said support member, a roller carried by said lever, a spring having one of its ends connected to said lever and adapted to have its other end secured to a fixed part whereby movement of said lever to door opening position will gradually increase the tension of said spring sufficient to move said lever in a door closing direction, check means acting upon said lever during a portion of its door closing movement and being rendered inoperative as the lever nears its full return movement, a second lever pivoted to said support member, a normally tensioned spring connected to said second lever and holding the same against said roller, and coacting cam surfaces on said second lever and said support member with which said roller engages and forming a wedge to forcibly move said door actuated lever to door closing position when said check means is rendered inoperative.

5. In a door check device including a door actuated lever, a spring tending to move said lever to door closing position, a pivoted catch member, spring means acting to resiliently hold said catch member in the path of movement of the said lever to door closing position to permit of the holding engagement of said catch member with said lever, and a pivoted actuating handle connected to said catch member for manually moving said catch member to releasing position against the action of said spring means.

SIMON DUBITSKY.
SAMUEL ADLER.
EUGENE GRIESHABER.
CHARLES DEARCOPP.
RALPH WOOD.