US 20040228551A1

(19) **United States**

(12) **Patent Application Publication**

(10) **Pub. No.: US 2004/0228551 A1**

(43) **Pub. Date: Nov. 18, 2004**

Tsukada et al.

(54) **SEALING DEVICE FOR LINEAR GUIDE APPARATUS**

(75) Inventors: **Toru Tsukada**, Gunma (JP); **Yutaka Igarashi**, Gunma (JP); **Soichiro Kato**, Gunma (JP); **Toshikazu Yabe**, Kanagawa (JP); **Fumio Ueki**, Kanagawa (JP)

Correspondence Address:
SUGHRUE MION, PLLC
2100 PENNSYLVANIA AVENUE, N.W.
SUITE 800
WASHINGTON, DC 20037 (US)

(73) Assignee: **NSK LTD.**

(21) Appl. No.: **10/712,306**

(22) Filed: **Nov. 14, 2003**

Related U.S. Application Data

(63) Continuation of application No. 10/263,674, filed on Oct. 4, 2002, now Pat. No. 6,672,764, which is a continuation of application No. 09/875,272, filed on Jun. 7, 2001, now Pat. No. 6,550,968, which is a continuation of application No. 09/371,493, filed on Aug. 10, 1999, now Pat. No. 6,257,765, which is a continuation of application No. 08/678,765, filed on Jul. 11, 1996, now Pat. No. 6,019,513.

(30) **Foreign Application Priority Data**

Jul. 11, 1995 (JP) ..... P. HEI. 7-174741
Jul. 28, 1995 (JP) ..... P. HEI. 7-193671
Aug. 11, 1995 (JP) ..... P. HEI. 7-206190

Publication Classification

(51) **Int. Cl.**[7] **F16C 33/10**; F16C 29/06; F16C 33/00

(52) **U.S. Cl.** **384/45**; 384/13; 384/15

(57) **ABSTRACT**

In a linear guide apparatus including an axially extending guide rail, a slider engaged with the guide rail, and a plurality of rolling elements loaded into the slider, the linear guide apparatus further includes a sealing device fixed to the slider in slidable contact with the guide rail for sealing a clearance existing between the guide rail and the slider, in which the sealing device includes: a lubricant-containing polymer member formed of a synthetic resin containing a lubricant, and having a contact portion contacting with the guide rail to surround the guide rail, both wing portions, a connecting portion connecting the wing portions to be C-shaped substantially, and a pair of first recesses formed in the respective wing portions for fixing the lubricant-containing polymer member to the slider; a first plate member fitted to the lubricant-containing polymer member opposed to the slider; and a pair of first cylindrical members inserted to the respective first recesses.

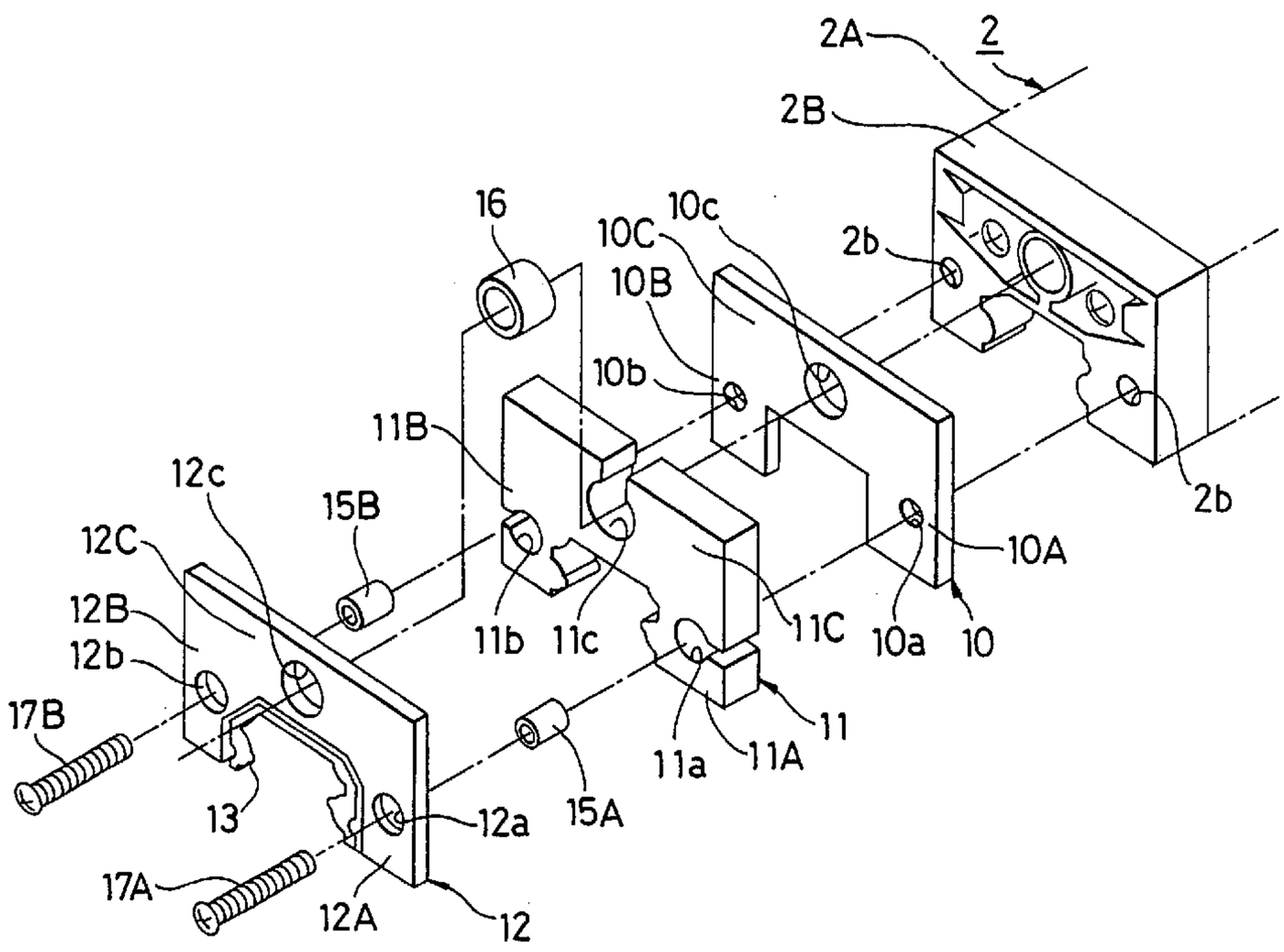

FIG. 1

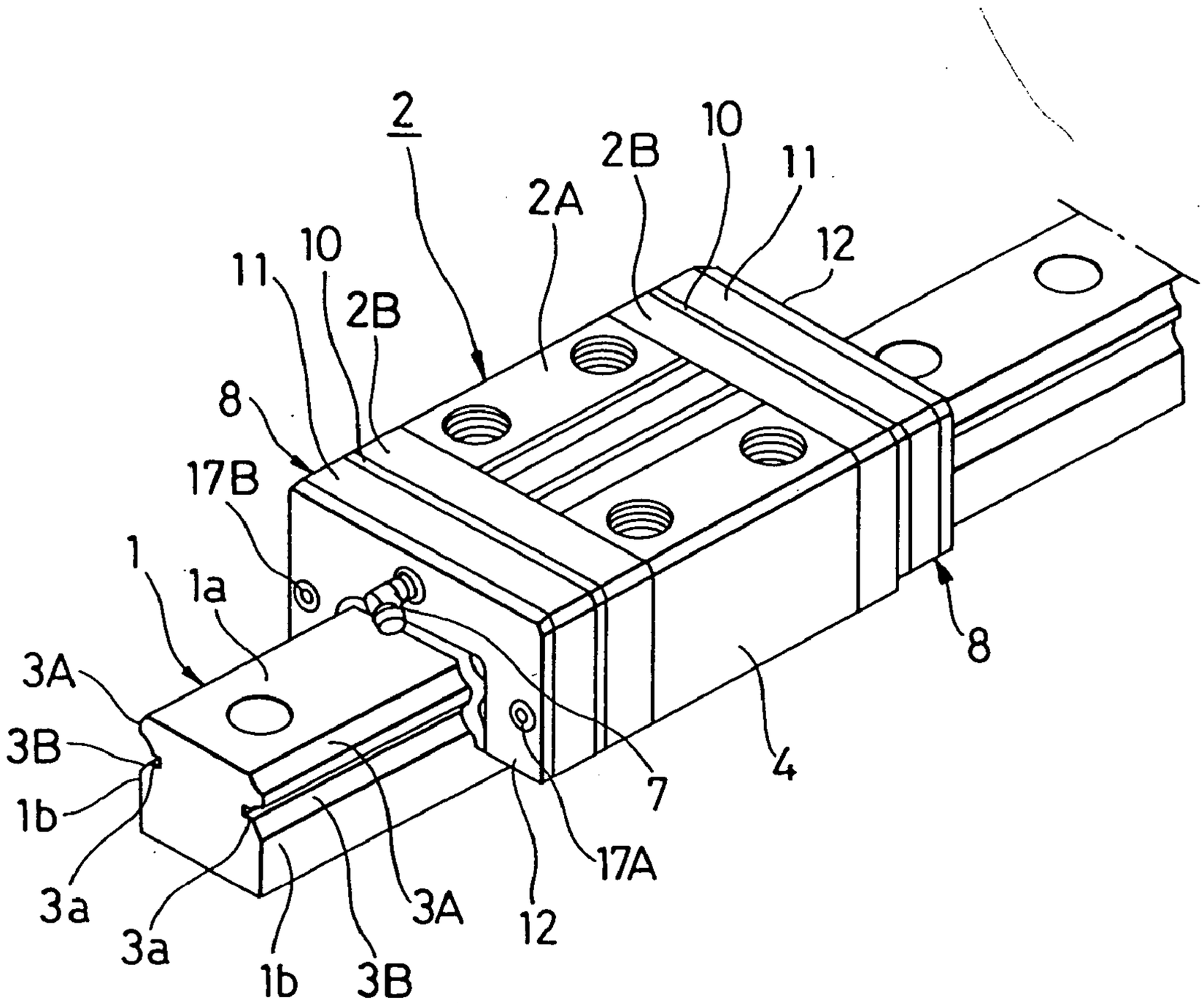

FIG. 2

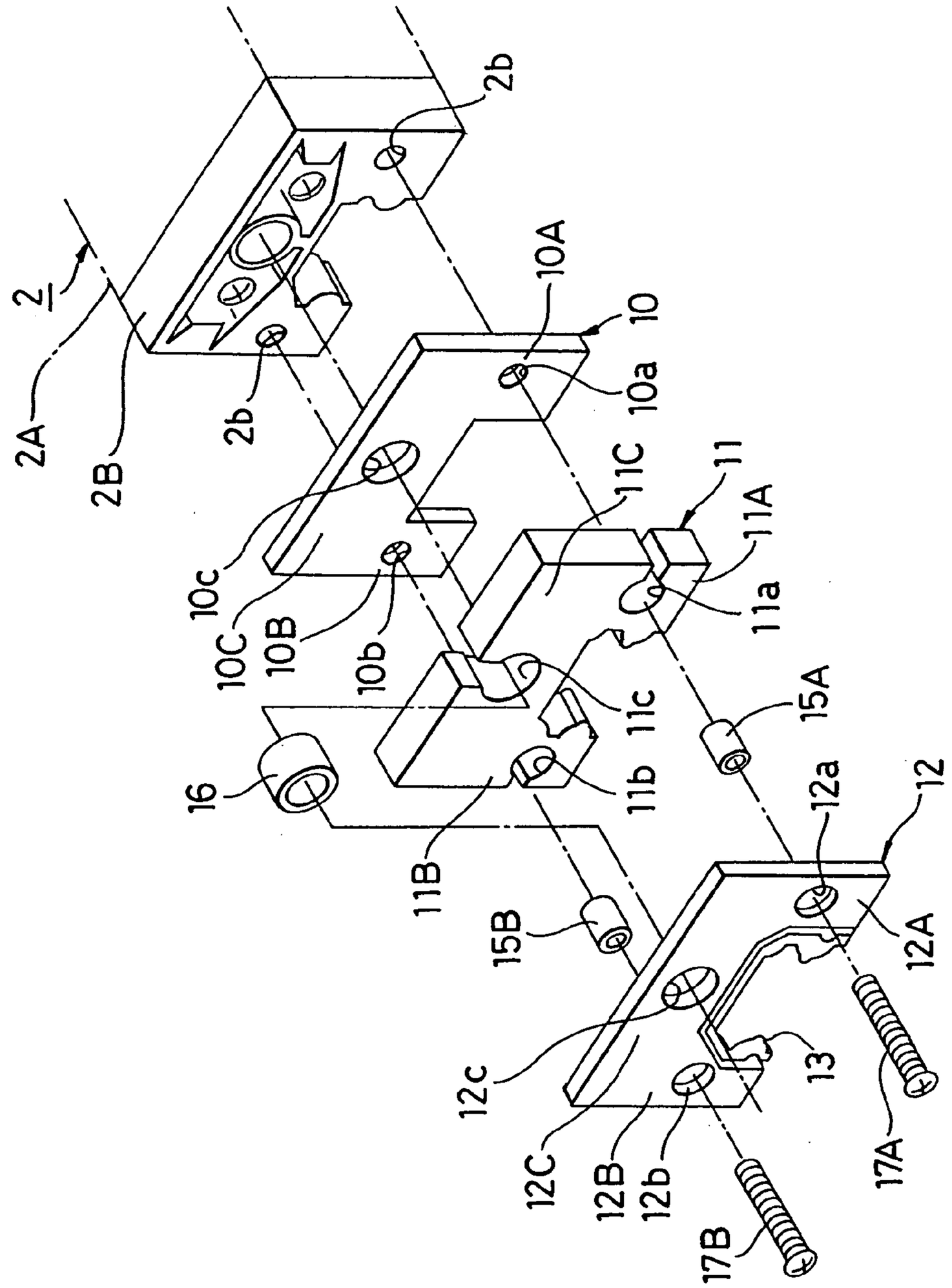
2
2A
2B
2b
2b
10A
10
10a
11C
11
11A
11a
10c
10C
10B
10b
11c
11b
11B
16
15A
15B
12a
12
12A
12c
12C
12B
12b
13
17A
17B

FIG. 3A

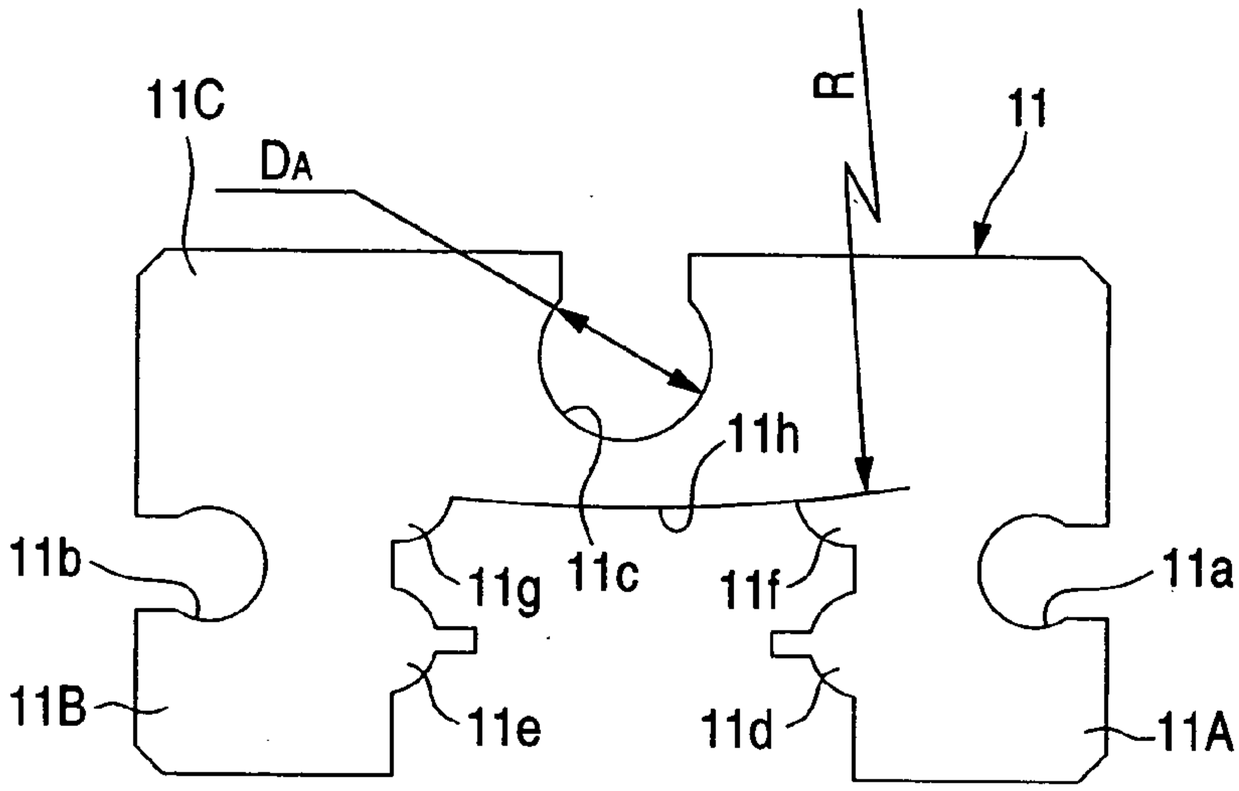

FIG. 3B

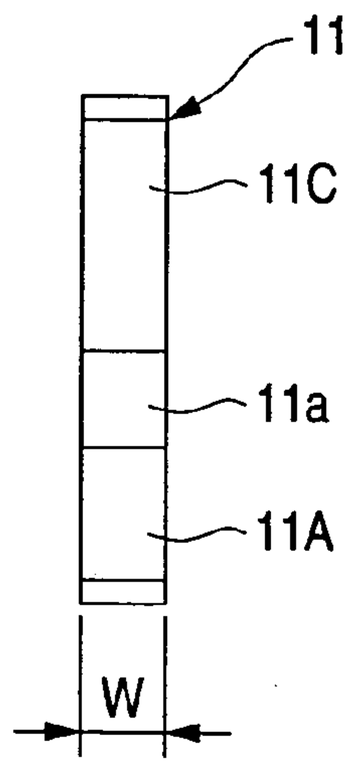

FIG. 4A

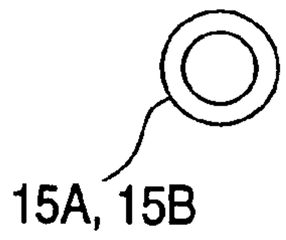

FIG. 4B

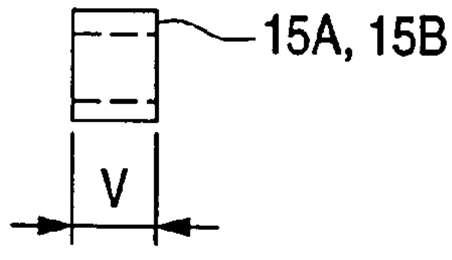

FIG. 5A

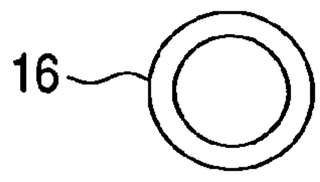

FIG. 5B

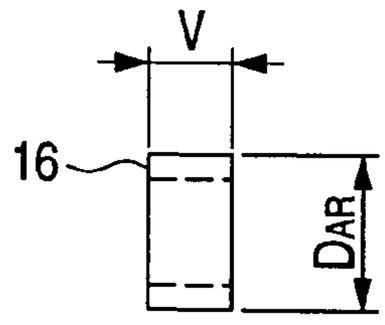

FIG. 6

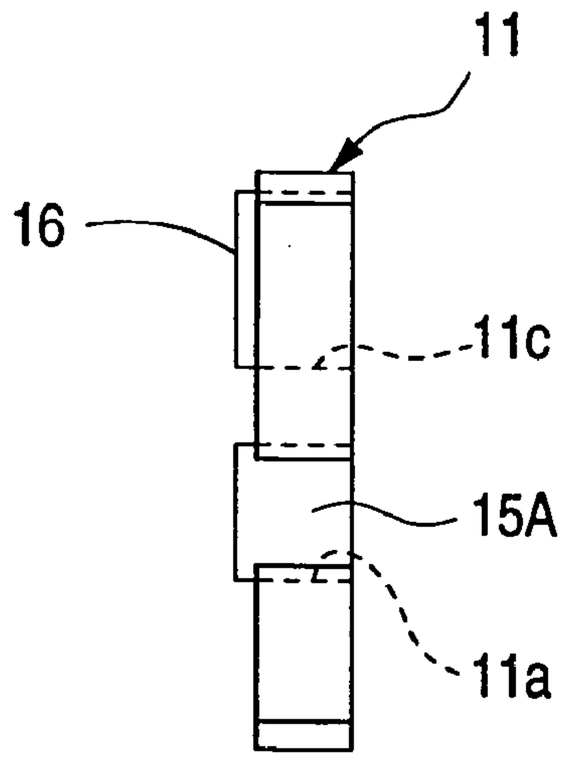
11
16
11c
15A
11a

FIG. 7

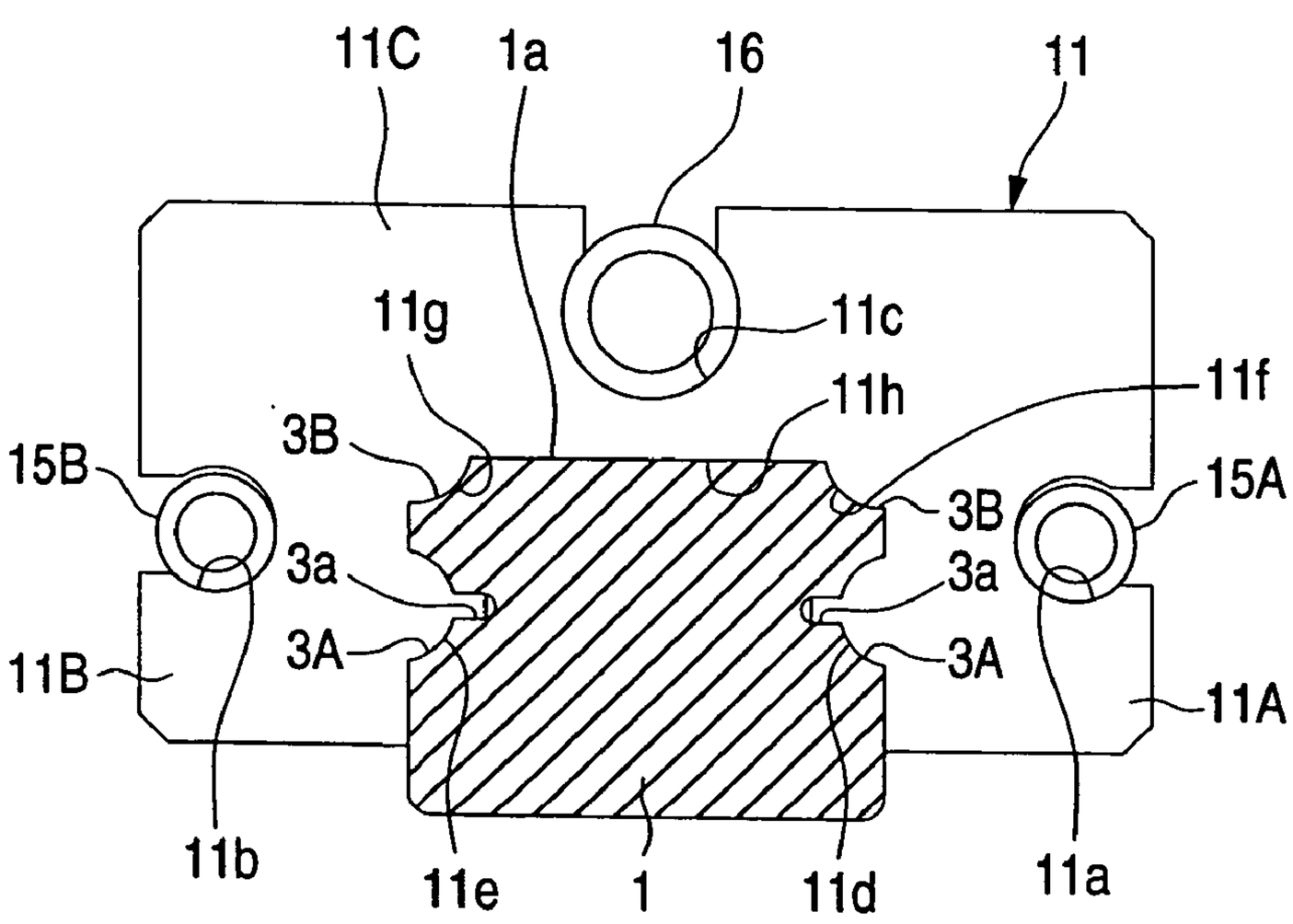
11C
1a
16
11
11g
11c
11h
11f
3B
15B
15A
3B
3a
3a
3A
3A
11B
11A
11b
11e
1
11d
11a

FIG. 8A

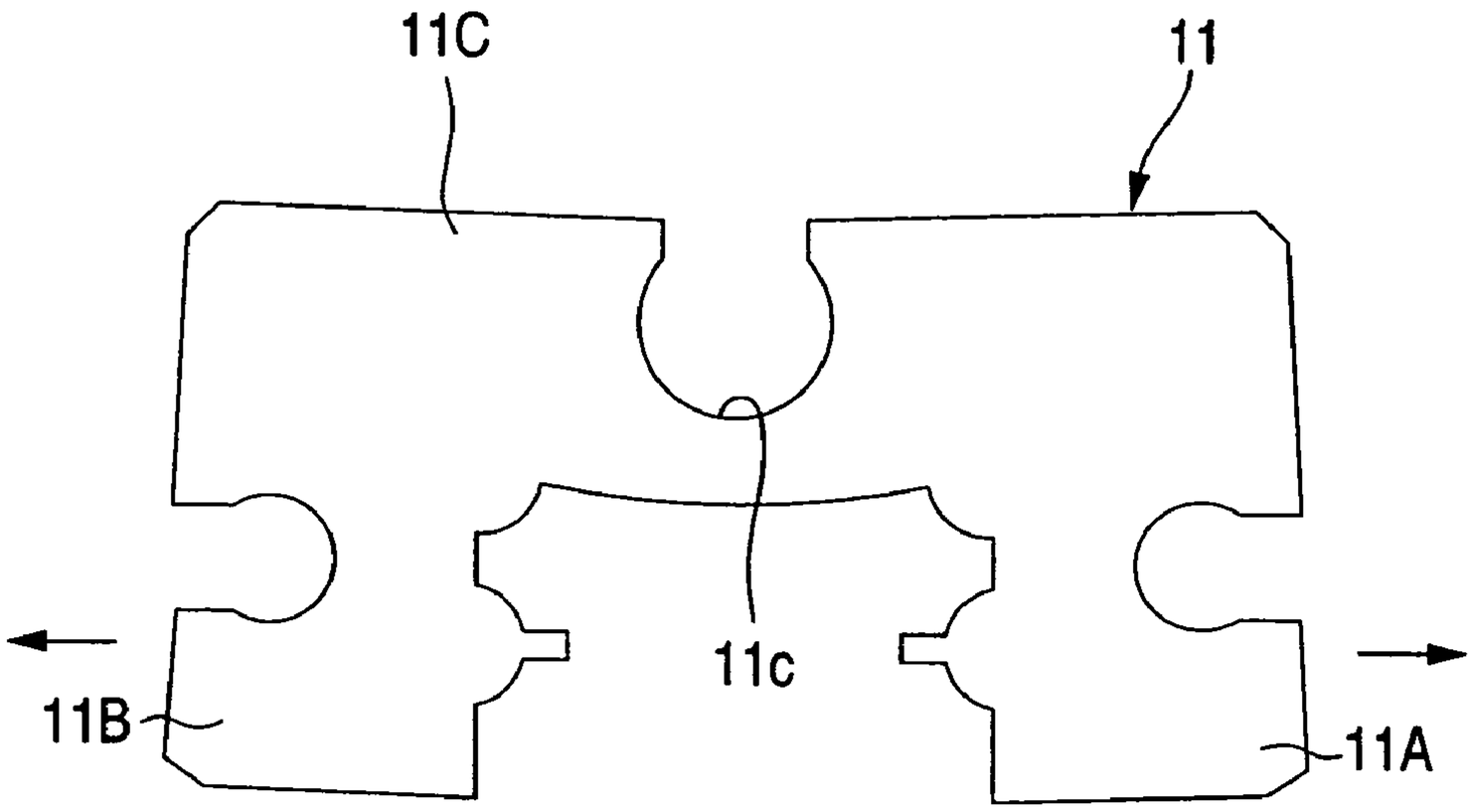

FIG. 8B

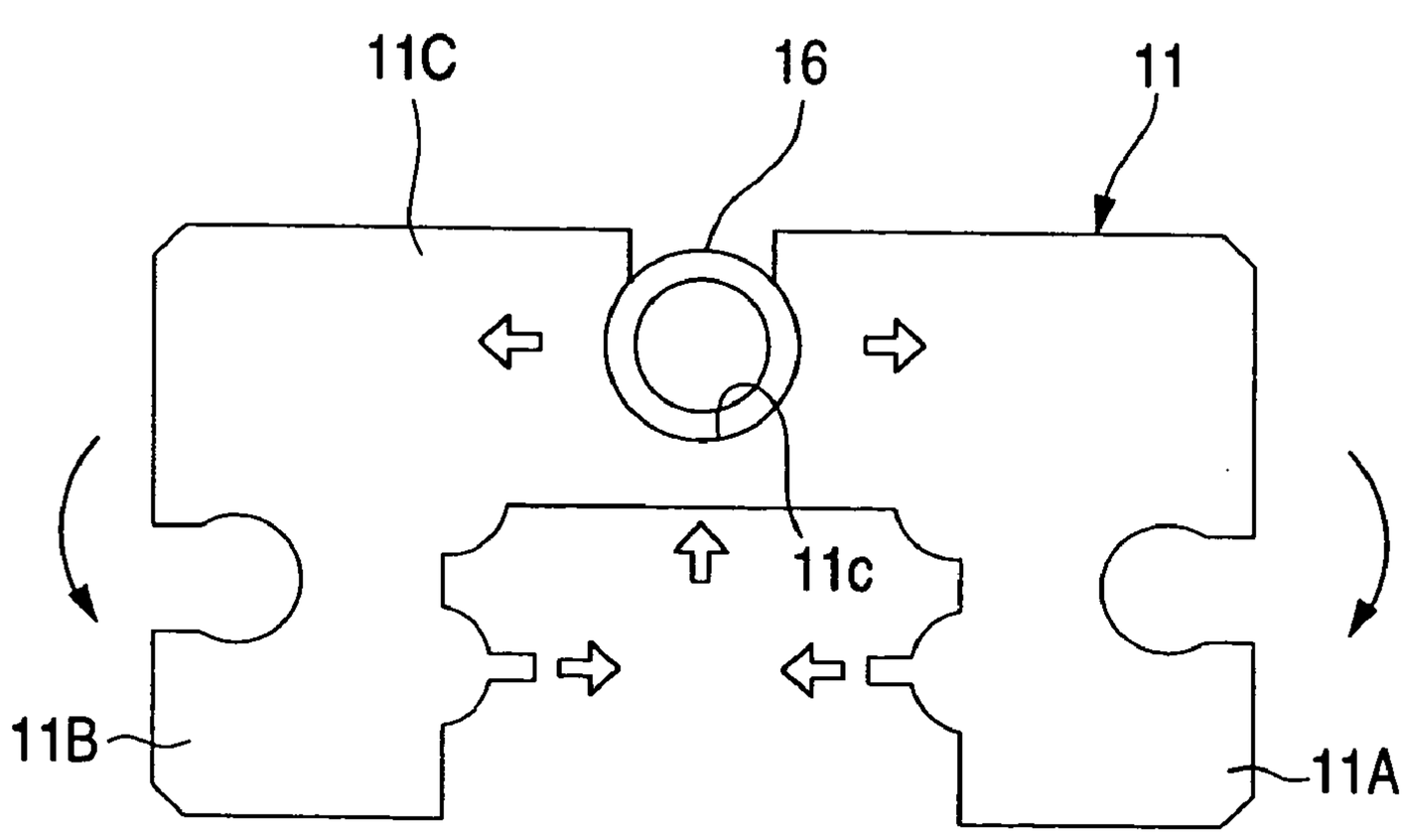

FIG. 9

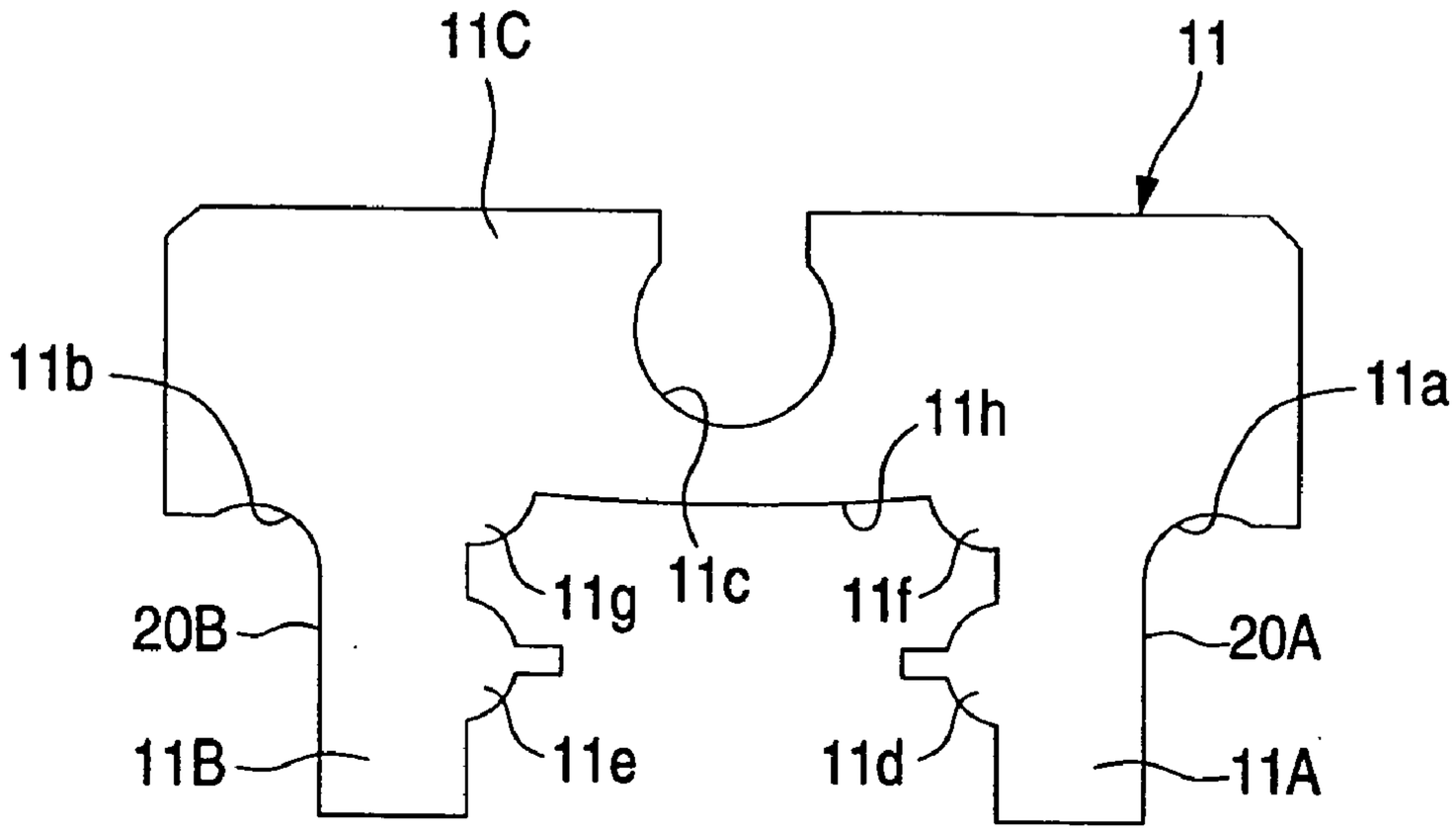
11C
11
11b
11a
11h
11g
11c
11f
20B
20A
11B
11e
11d
11A

FIG. 10

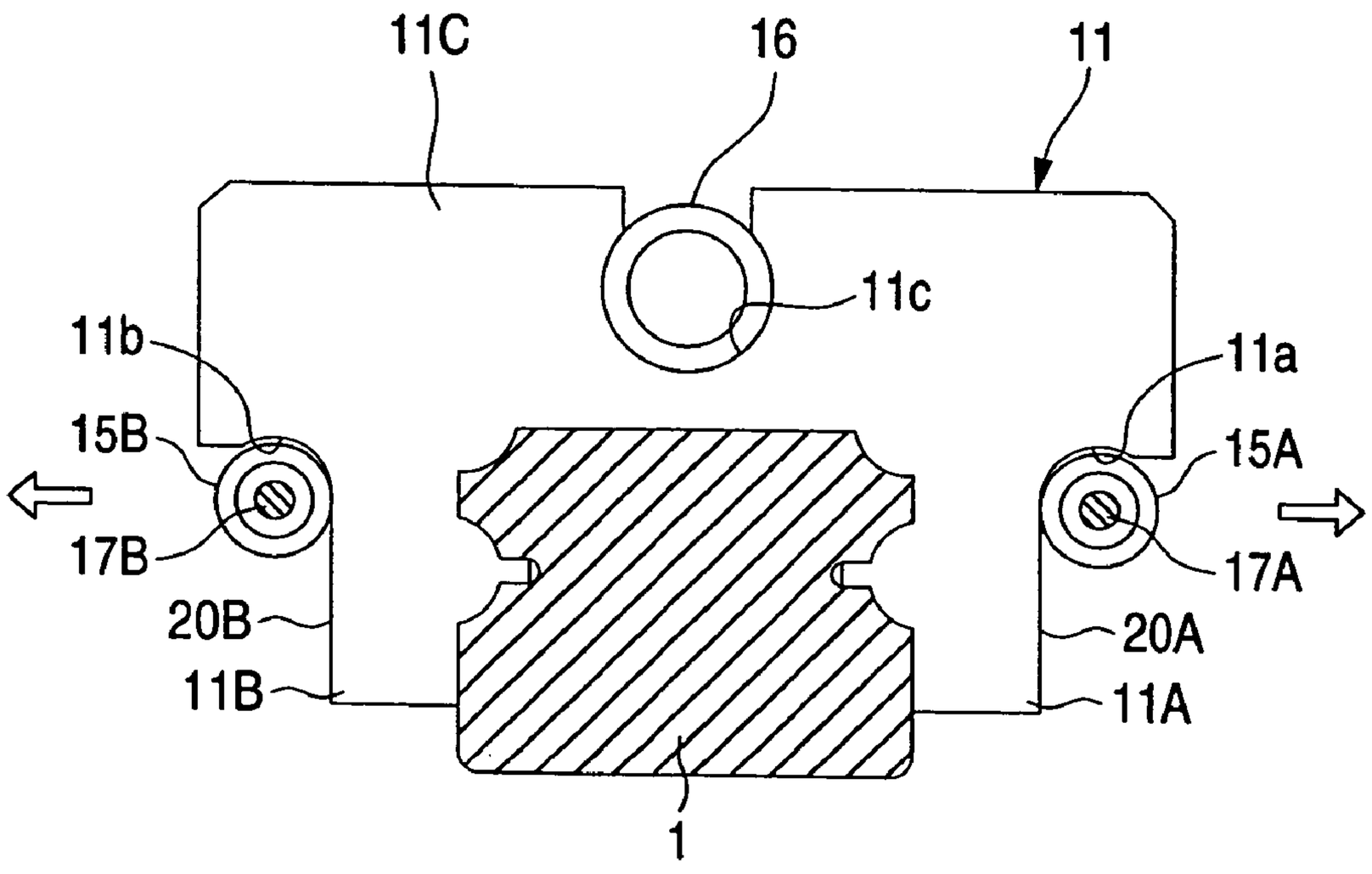
11C
16
11
11c
11b
11a
15B
15A
17B
17A
20B
20A
11B
11A
1

FIG. 11

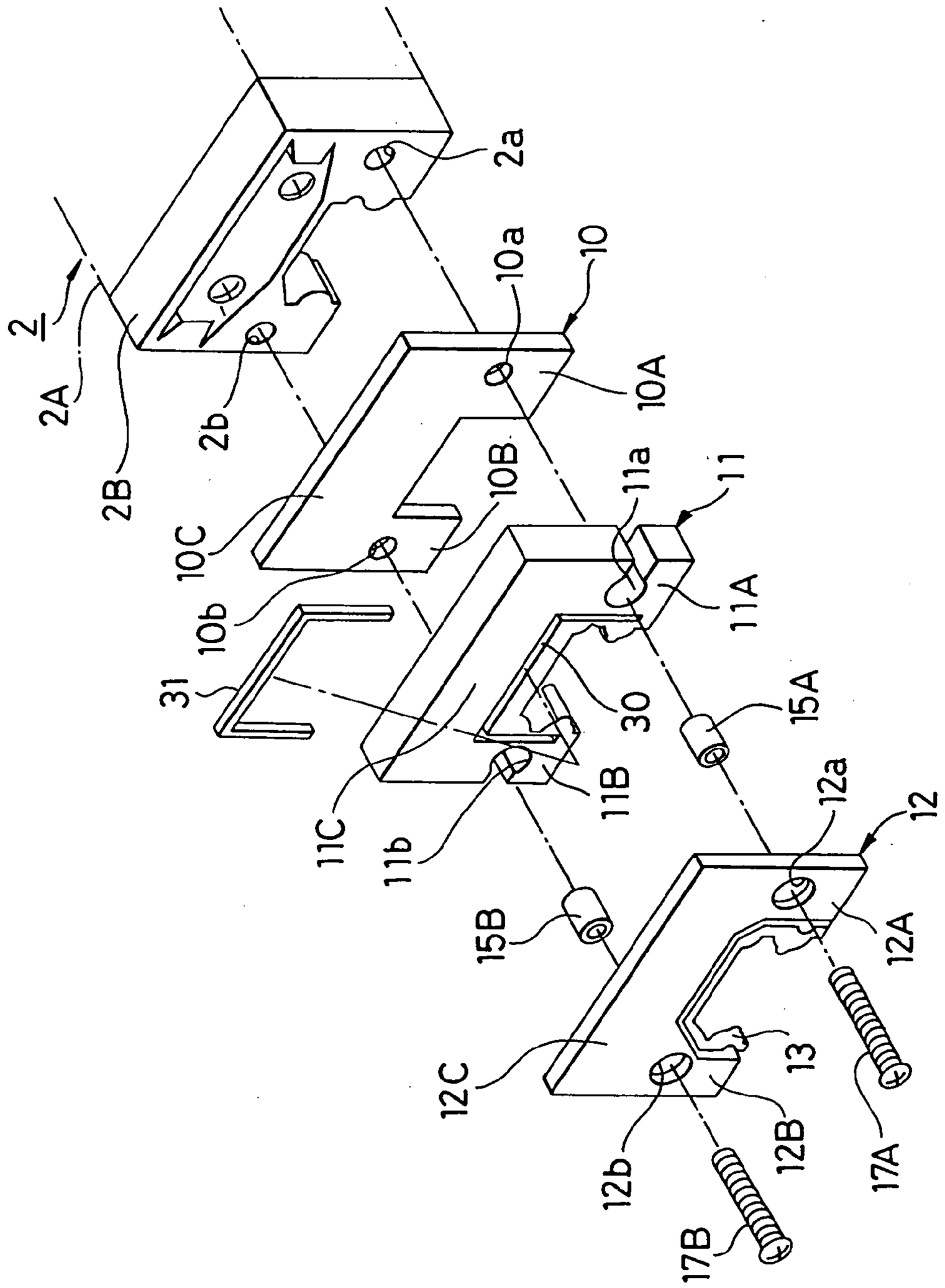
2
2A
2B
2a
2b
10
10a
10A
10B
10C
10b
11
11a
11A
11B
11C
11b
30
31
15A
15B
12
12a
12A
12B
12C
12b
13
17A
17B

FIG. 12A

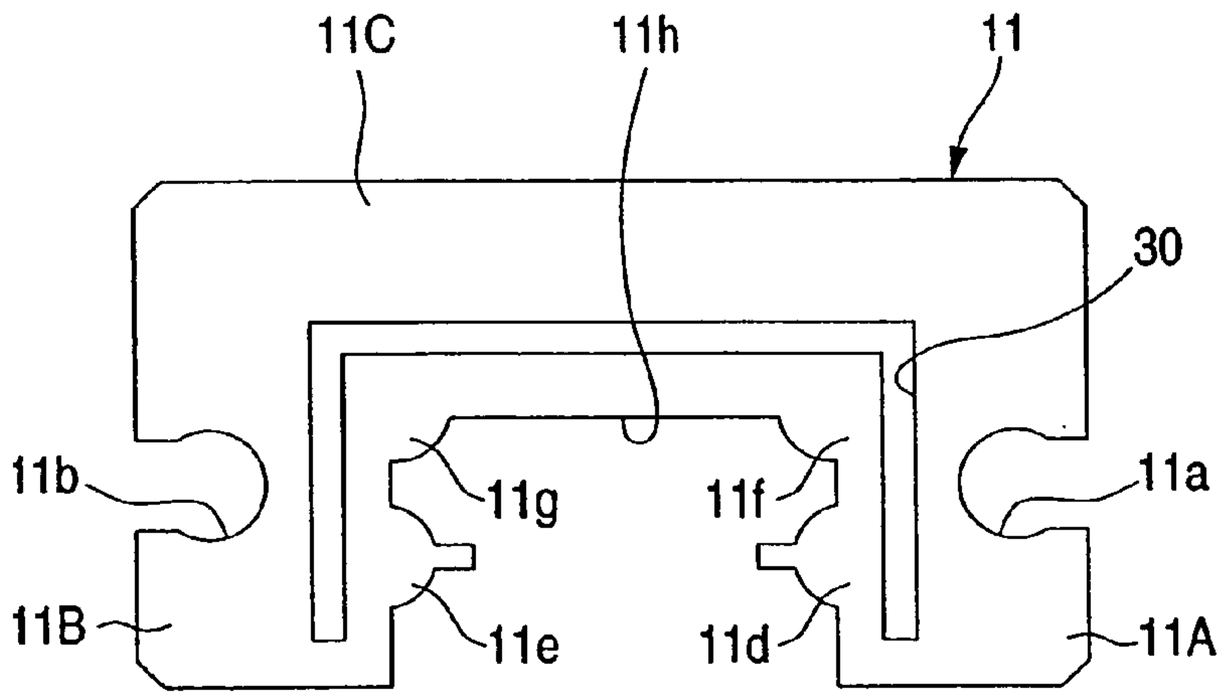

FIG. 12B

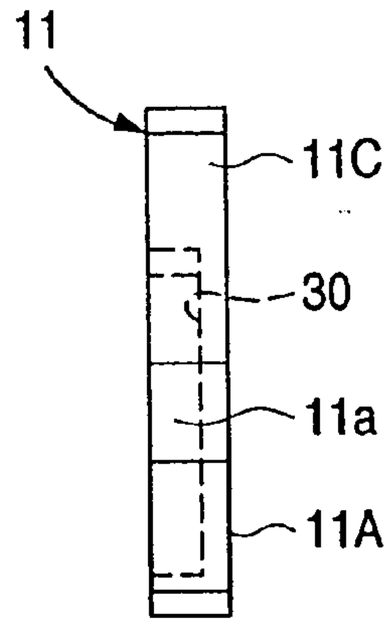

FIG. 13A

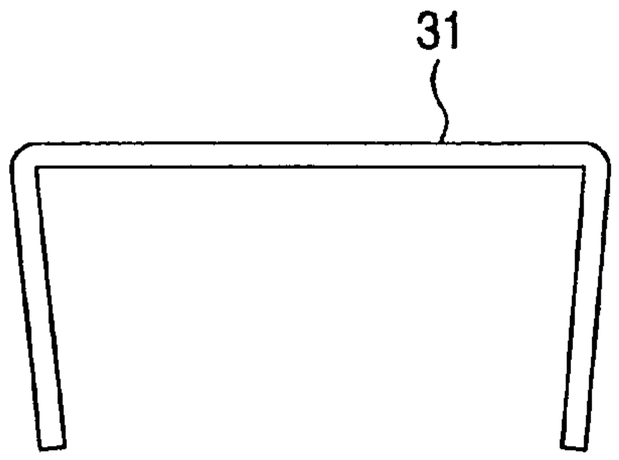

FIG. 13B

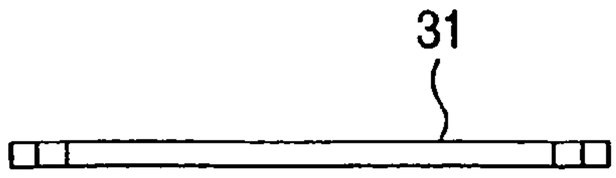

FIG. 14

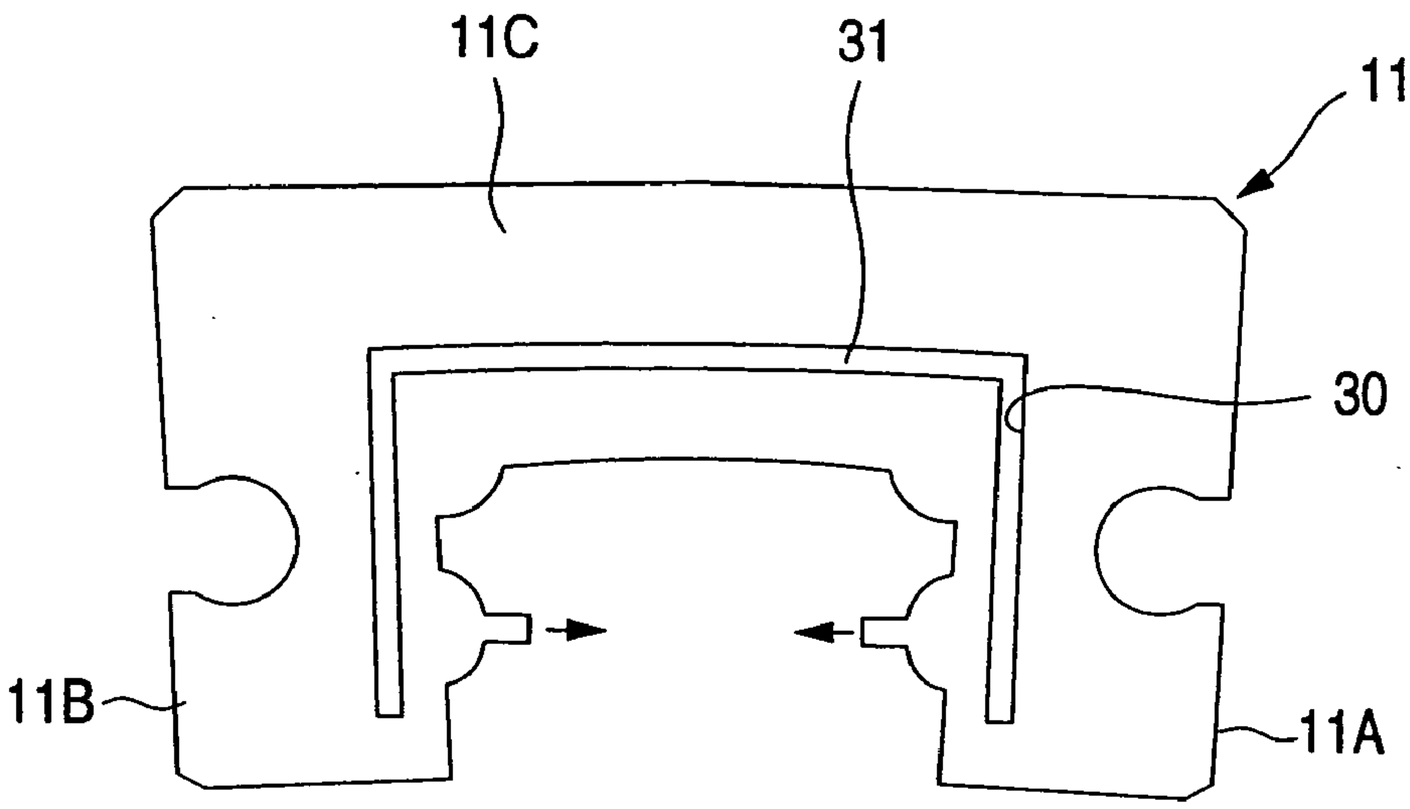

FIG. 15

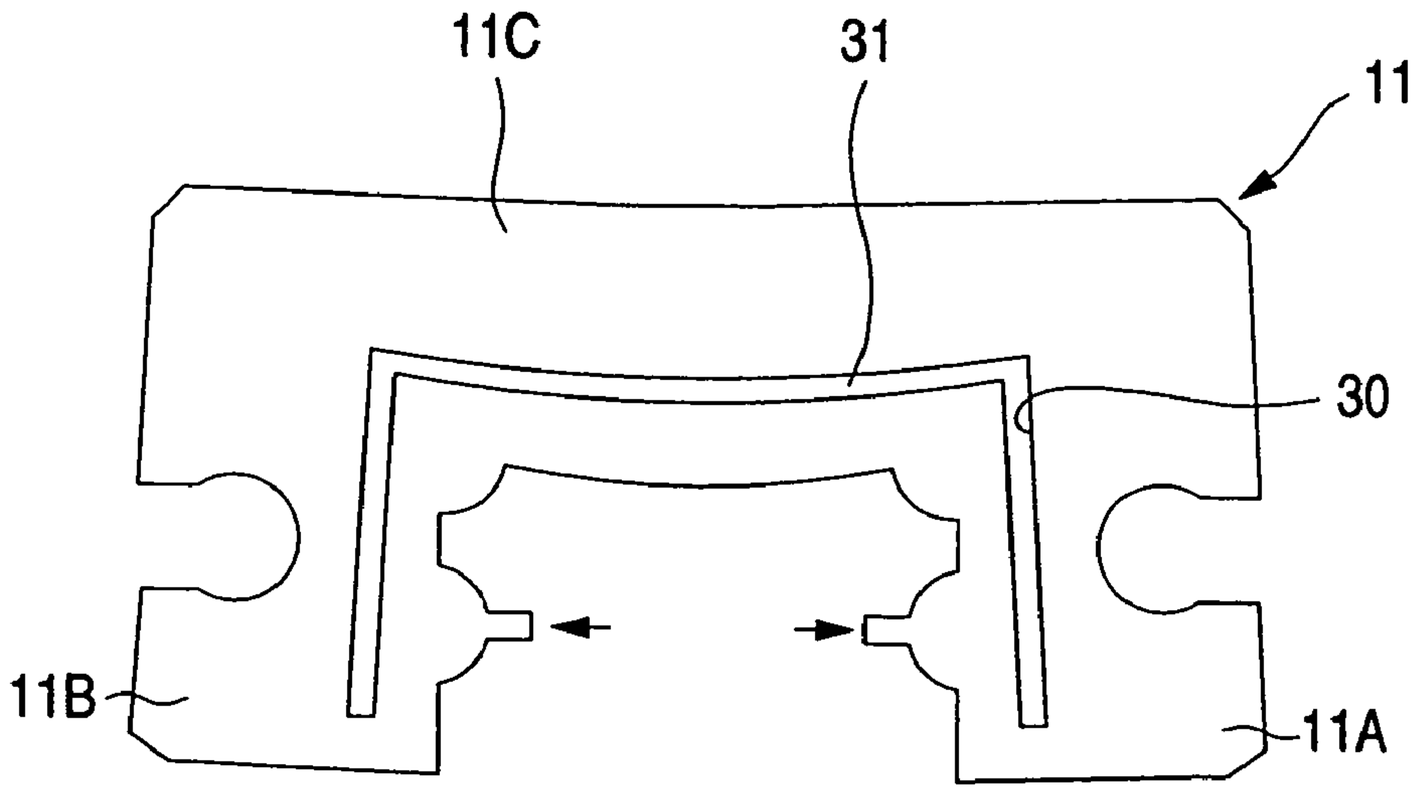

FIG. 16

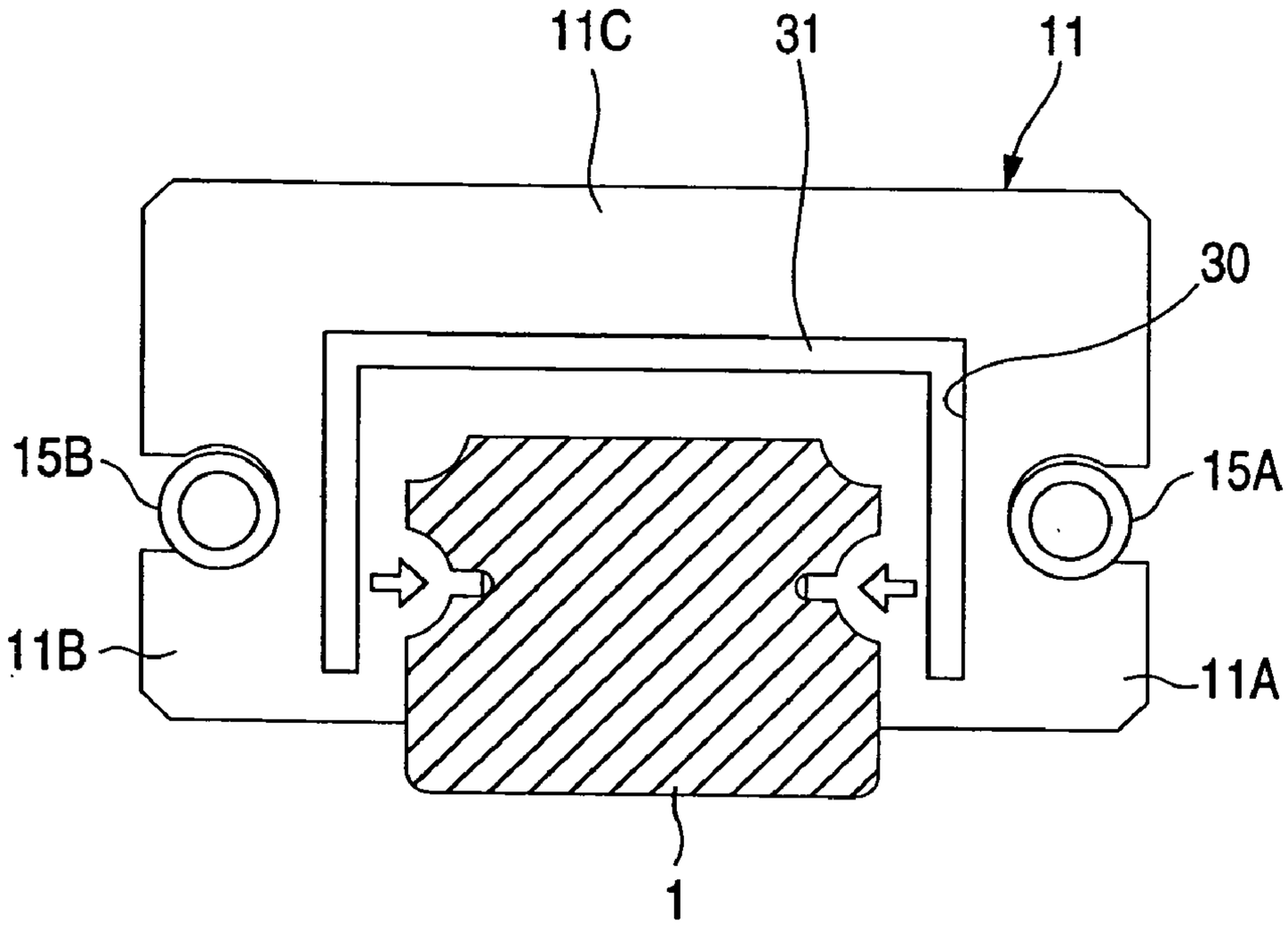

FIG. 17

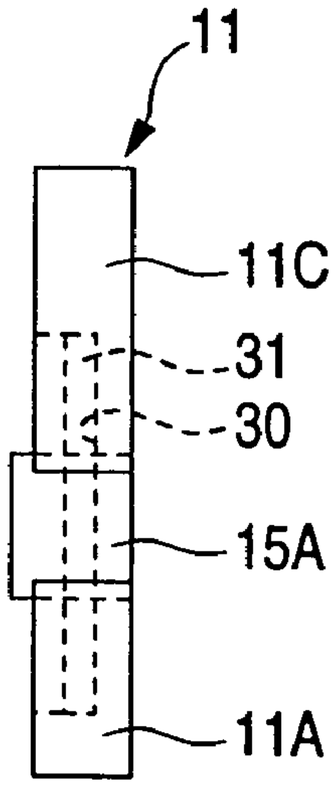

FIG. 18A

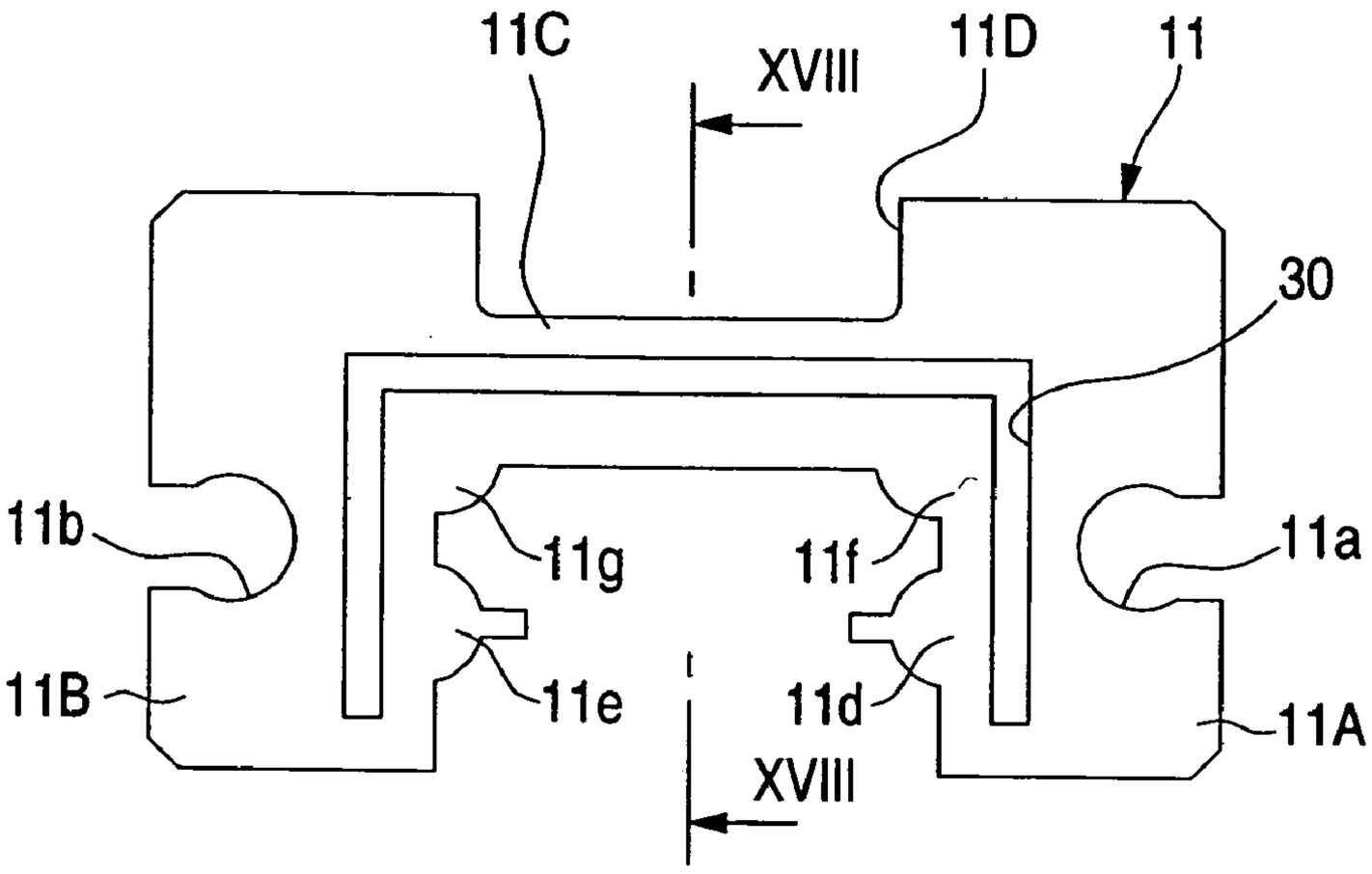

FIG. 18B

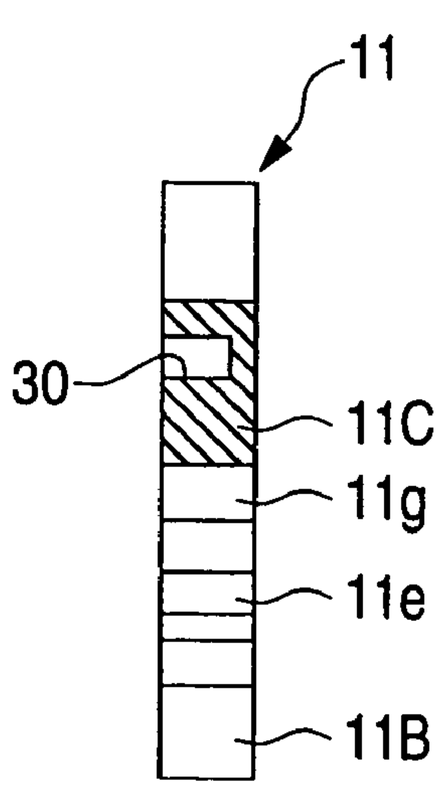

FIG. 19A

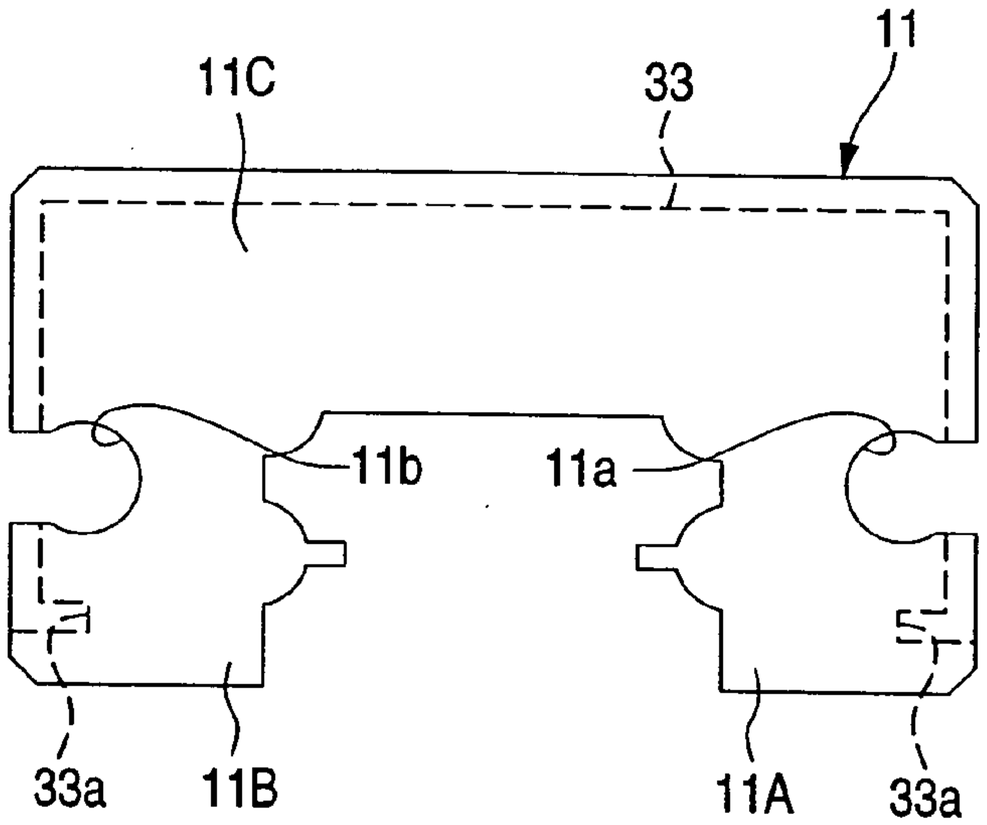

FIG. 19B

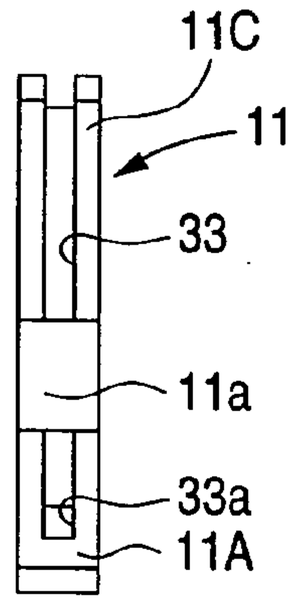

FIG. 20

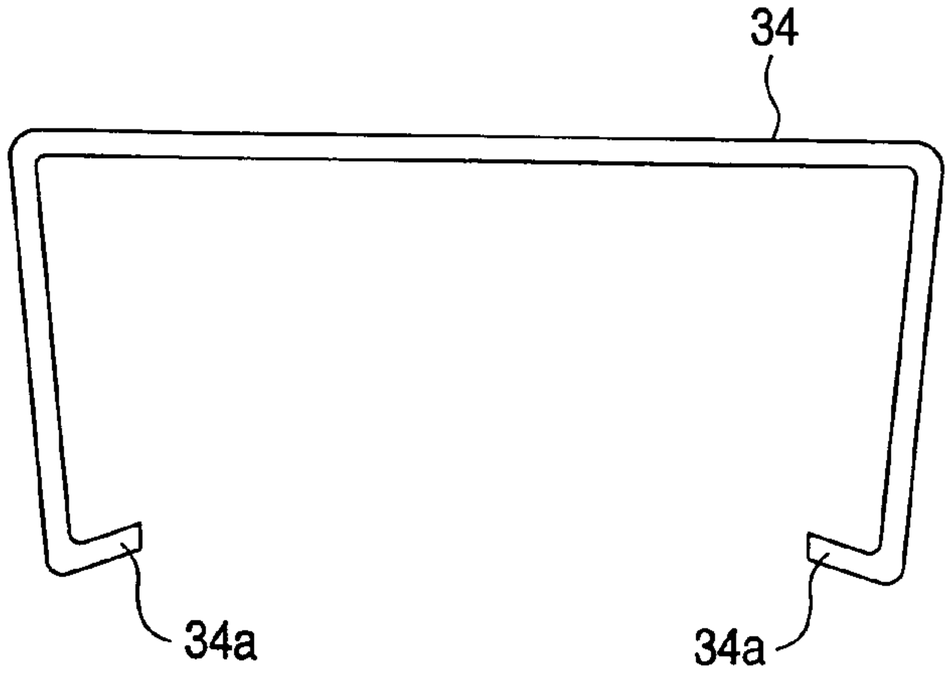

FIG. 21A

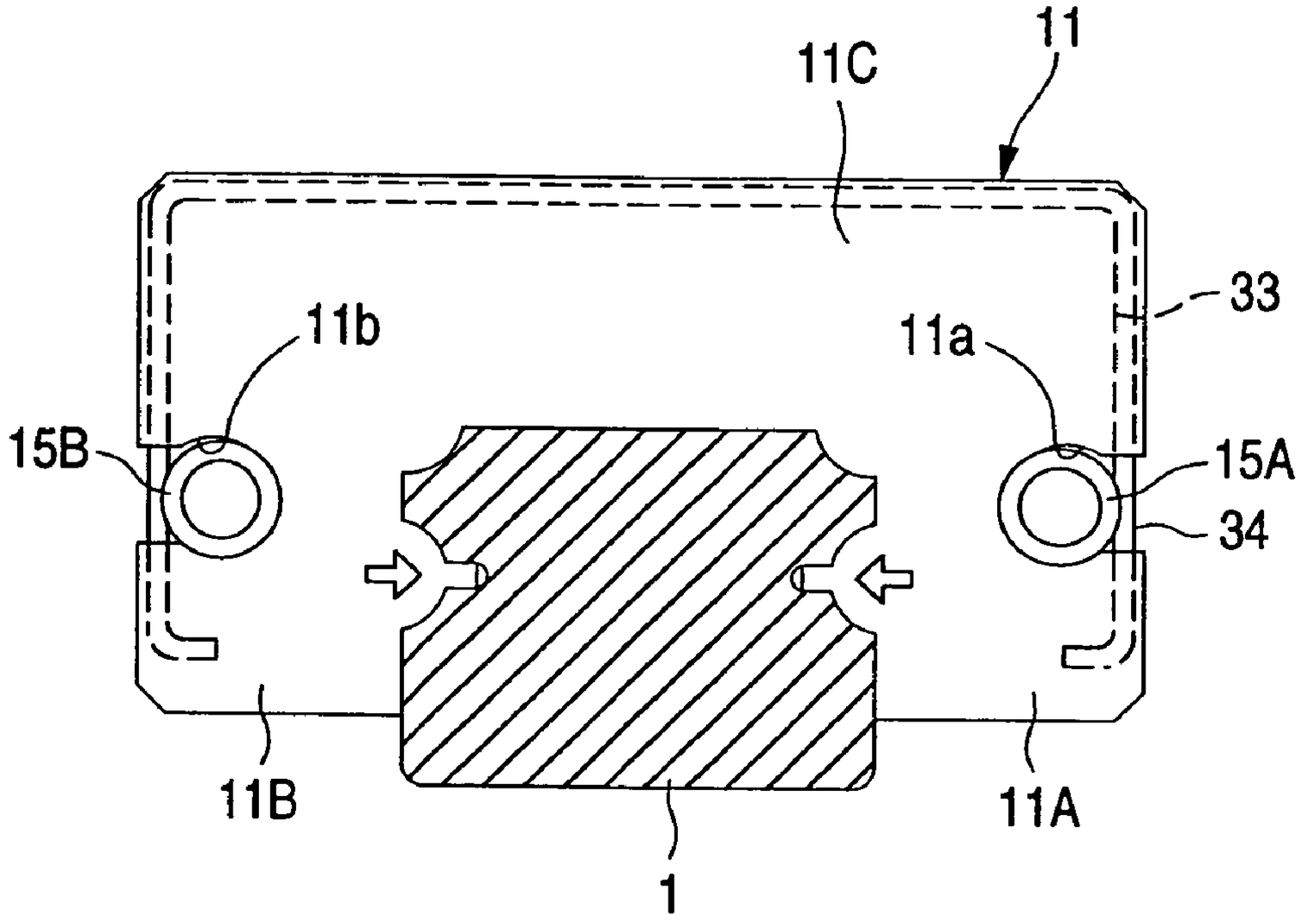

FIG. 21B

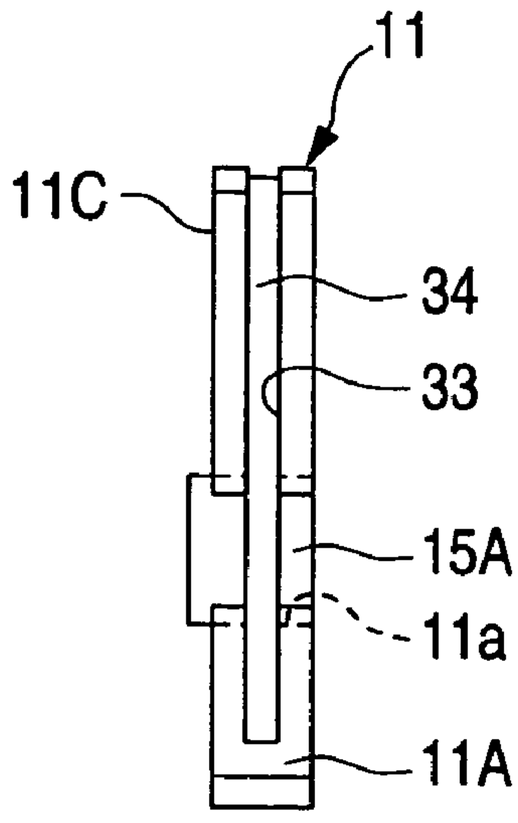

FIG. 22

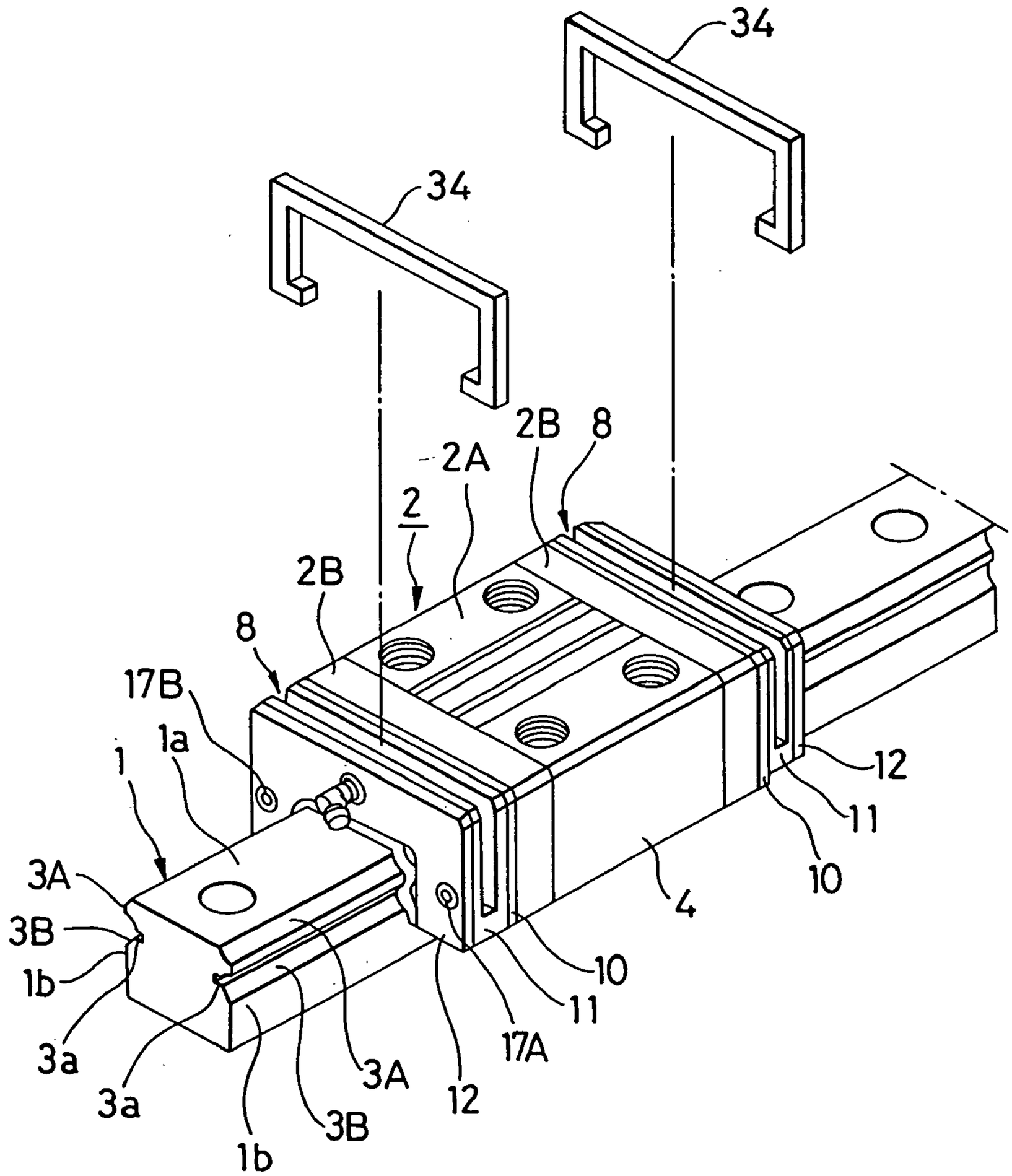
34
34
2B
8
2A
2
2B
8
17B
1a
1
12
11
10
4
3A
3B
1b
3a
3a
1b
3B
3A
12
17A
11
10

FIG. 23

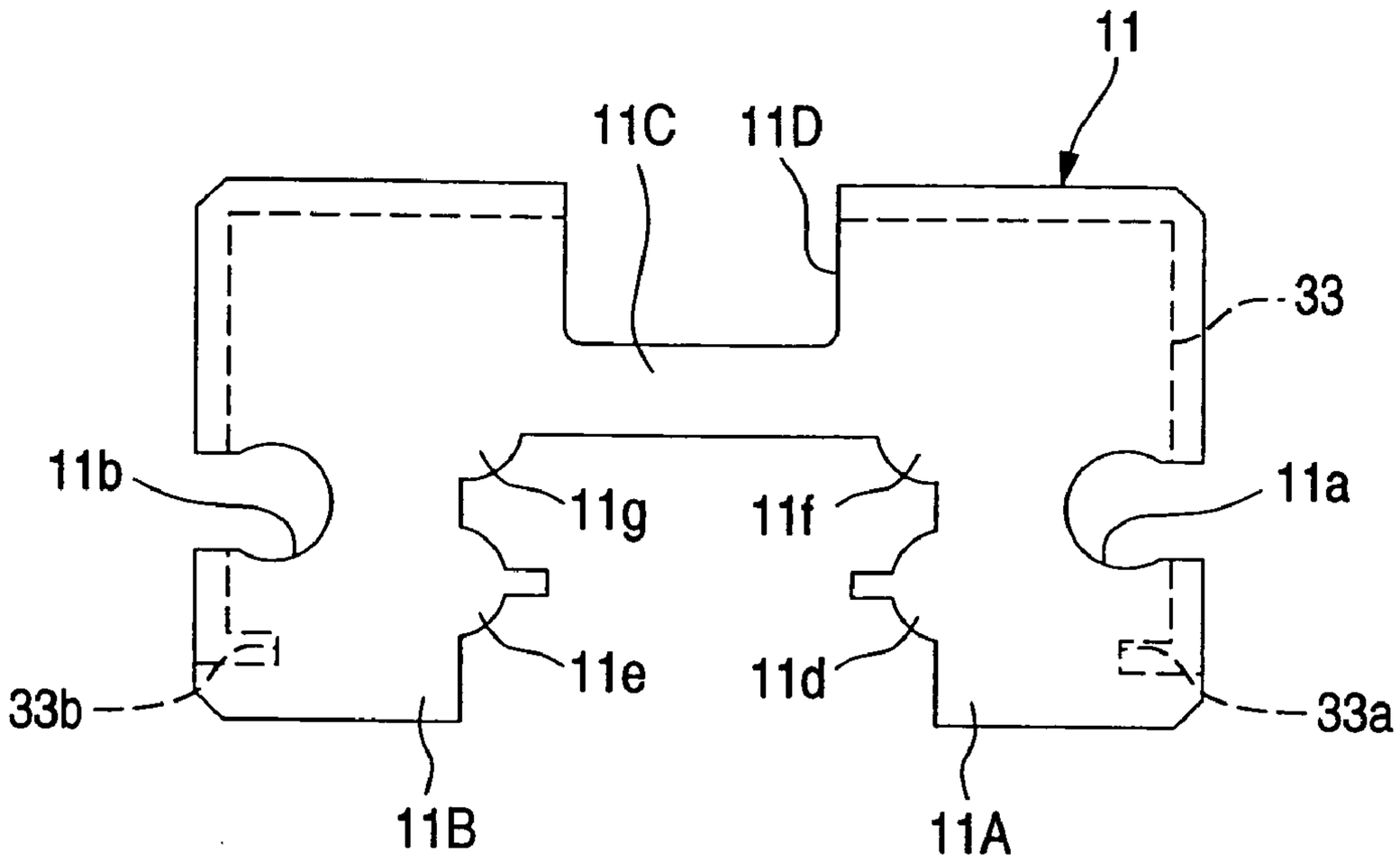
11
11C
11D
33
11b
11g
11f
11a
11e
11d
33b
33a
11B
11A

FIG. 24

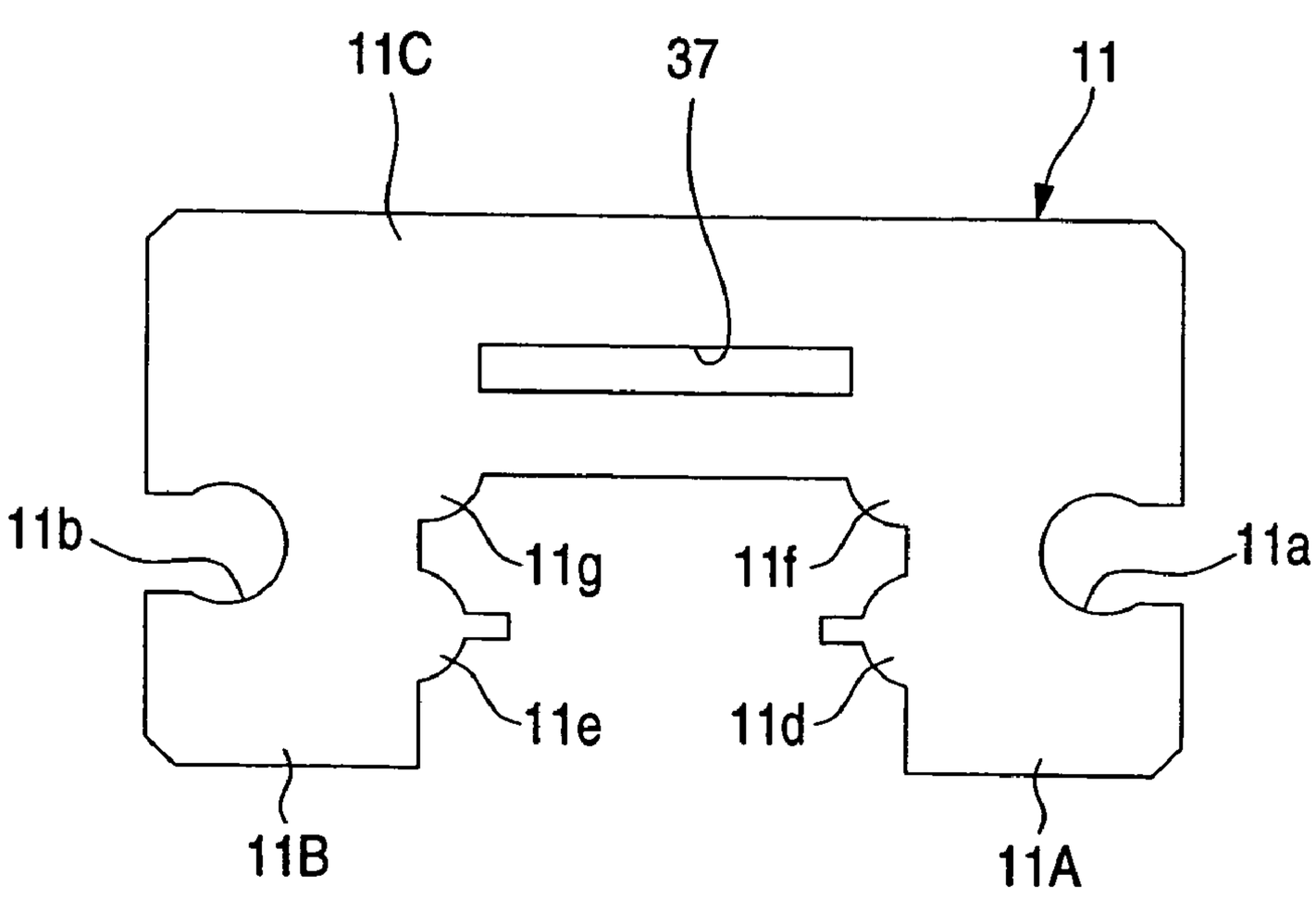
11C
37
11
11b
11g
11f
11a
11e
11d
11B
11A

FIG. 25A

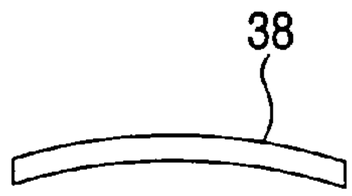

FIG. 25B

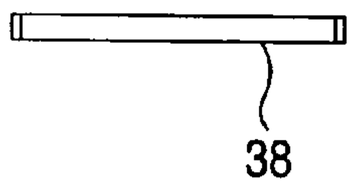

FIG. 26A

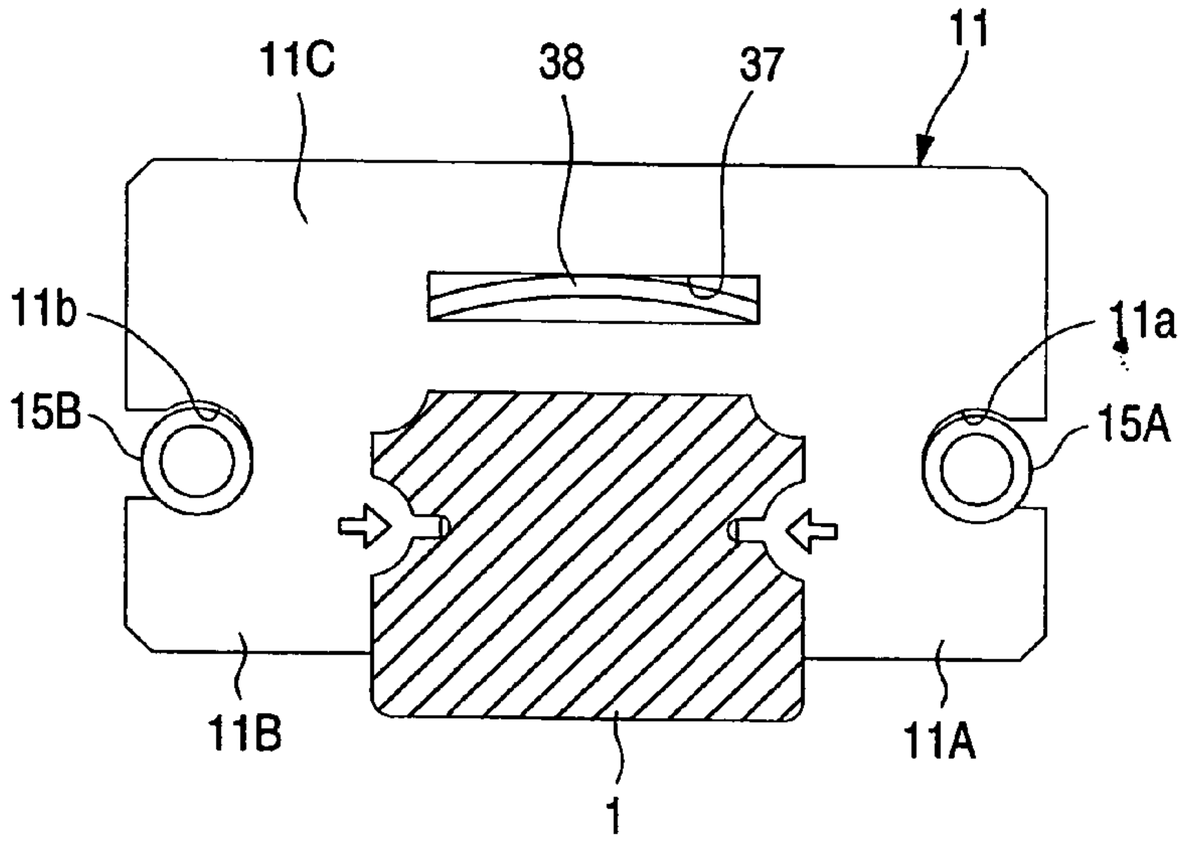

FIG. 26B

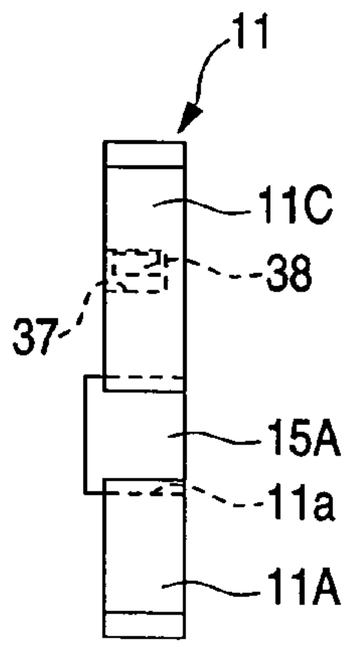

FIG. 27

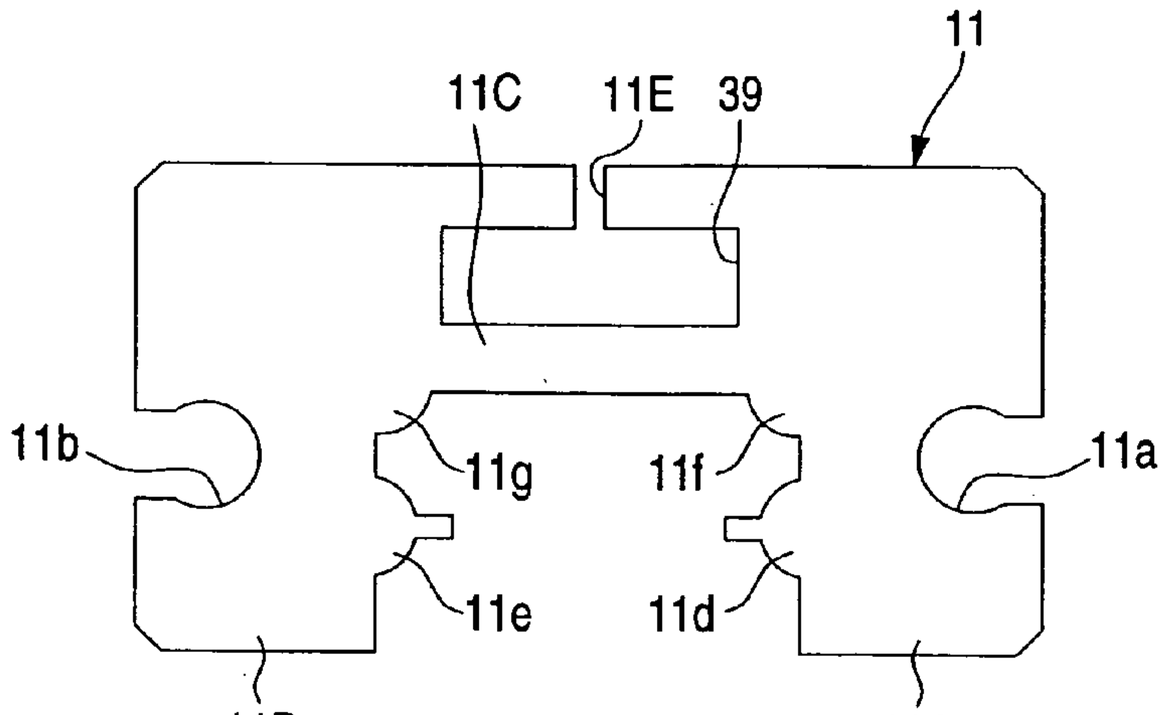

FIG. 28A

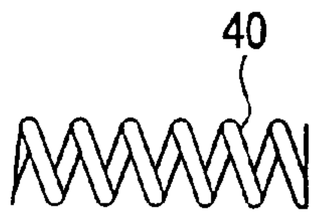

FIG. 28B

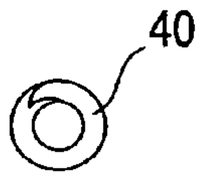

FIG. 29A

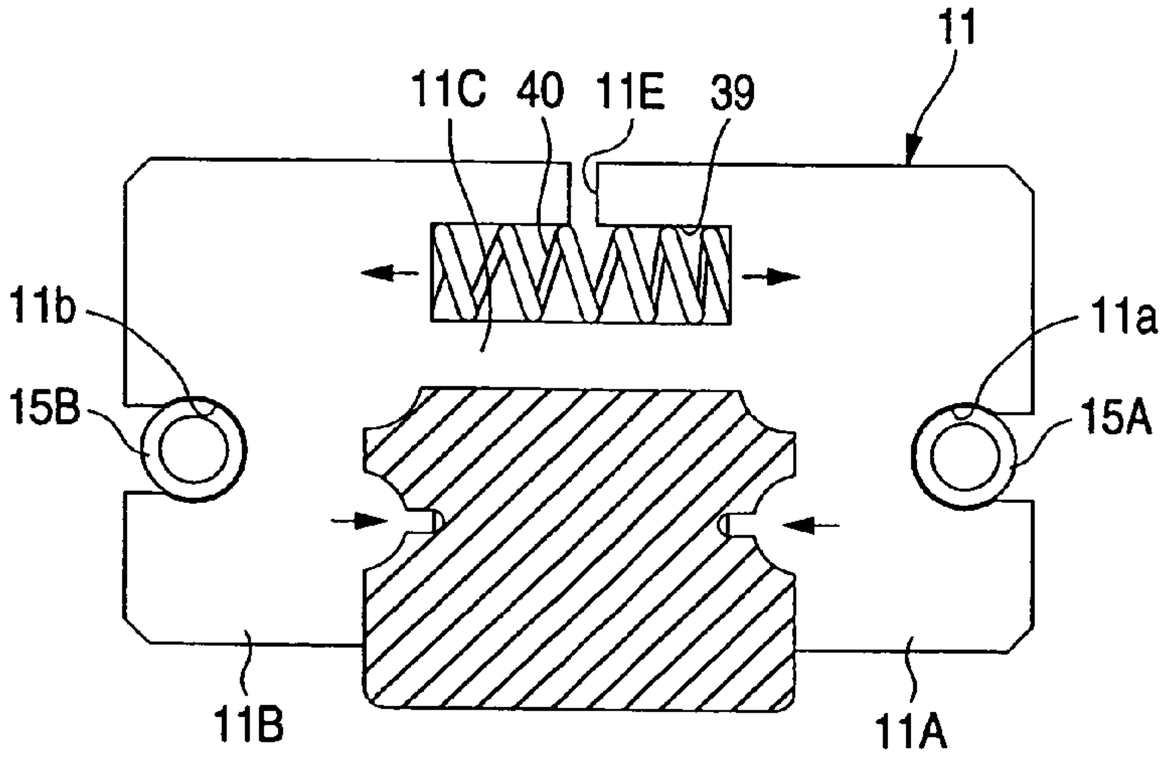

FIG. 29B

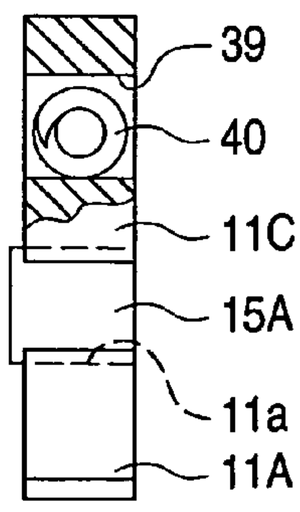

FIG. 30B

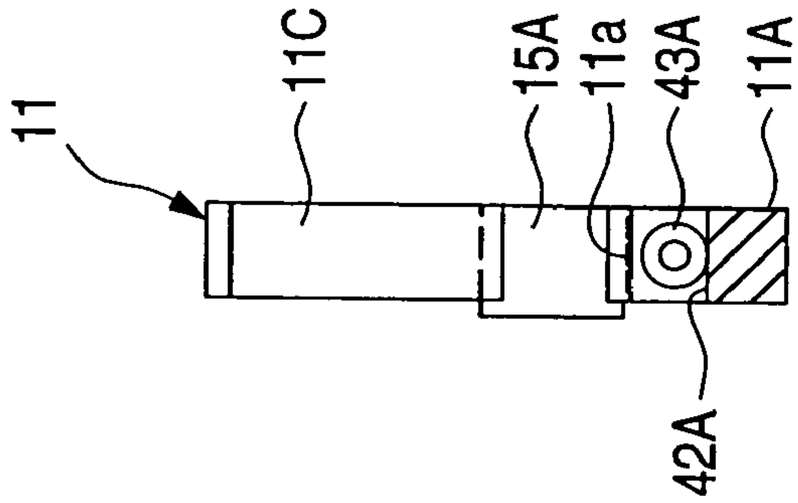

FIG. 30A

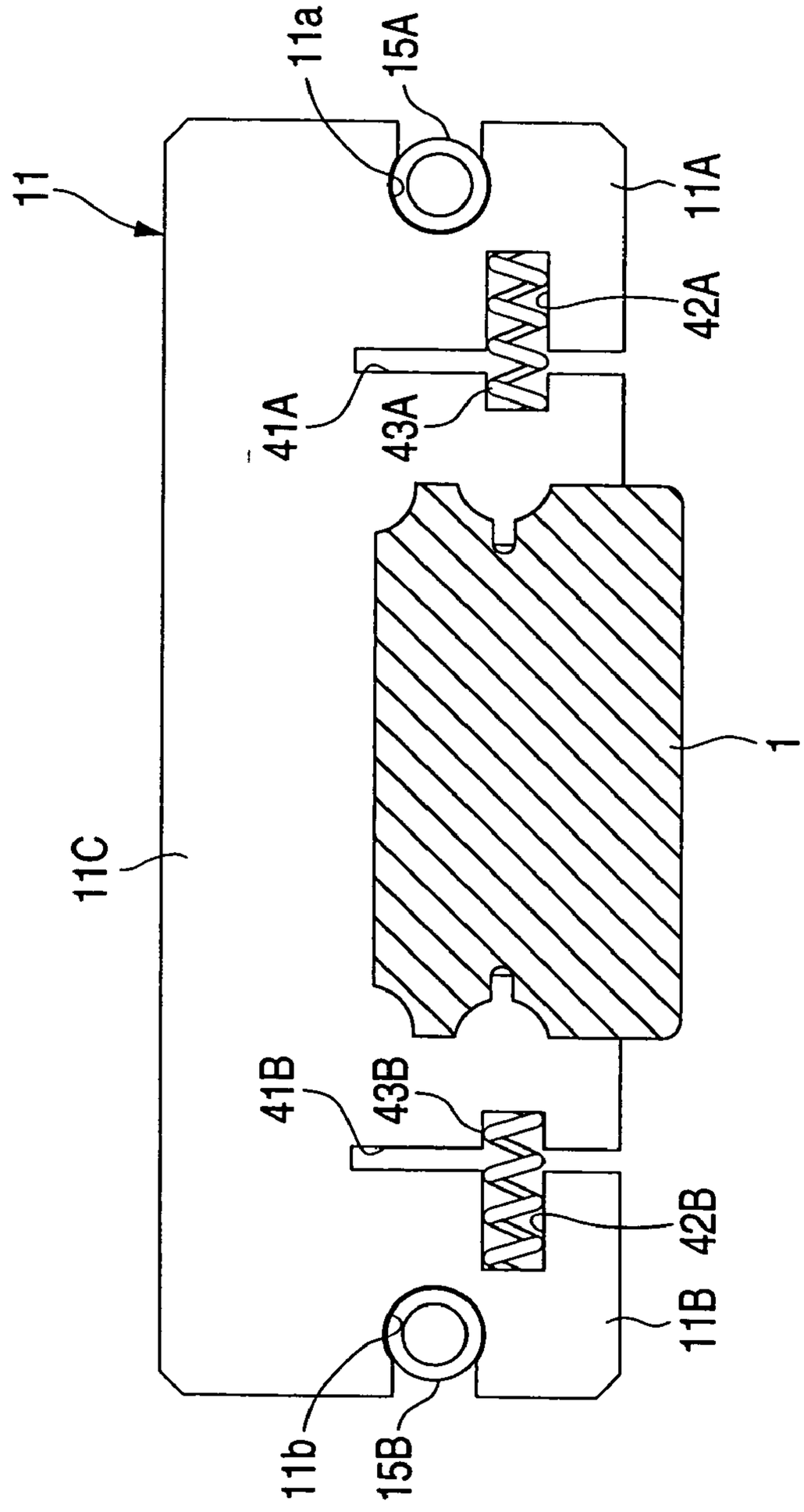

FIG. 31A

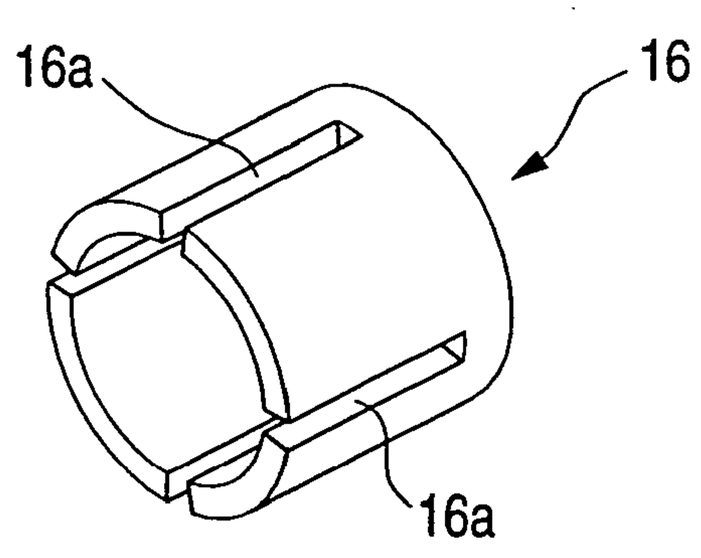

FIG. 31B

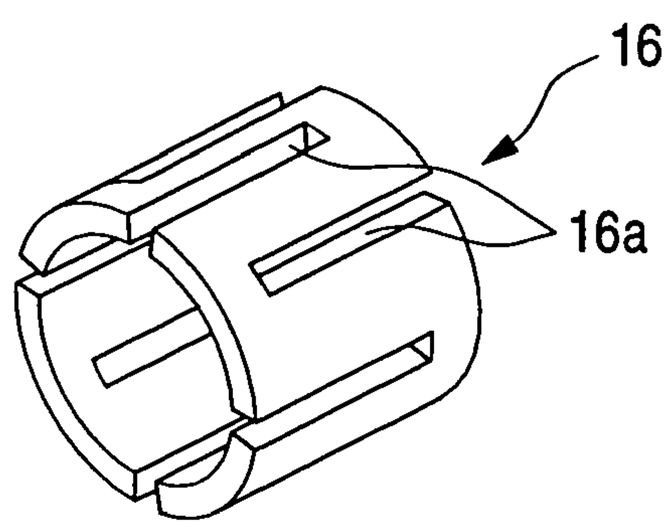

FIG. 31C

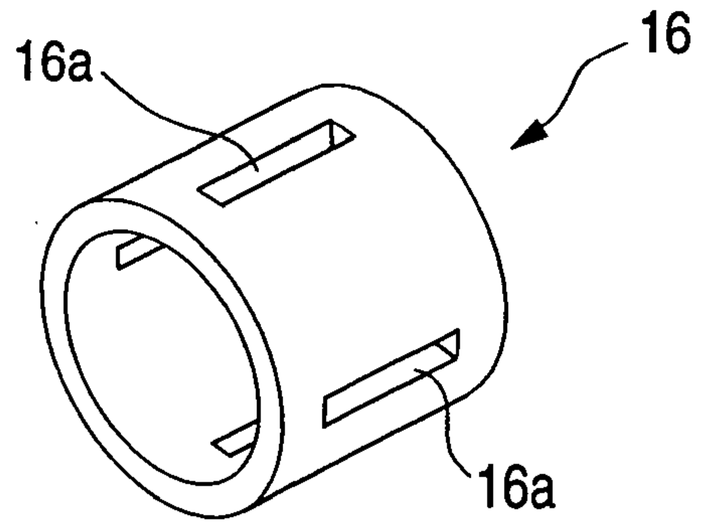

FIG. 31D

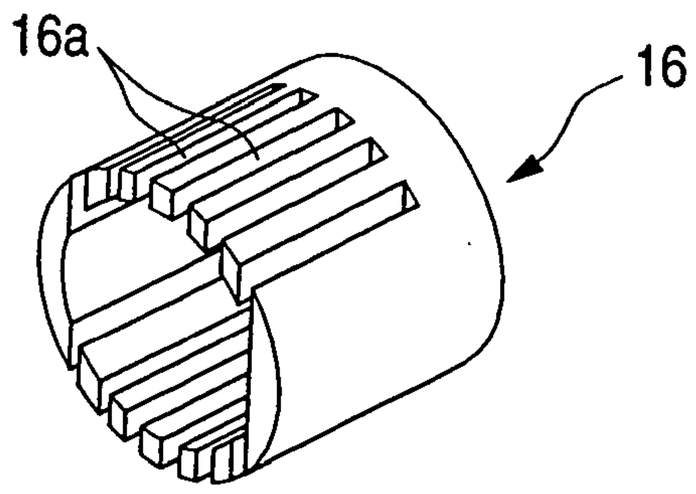

FIG. 32A

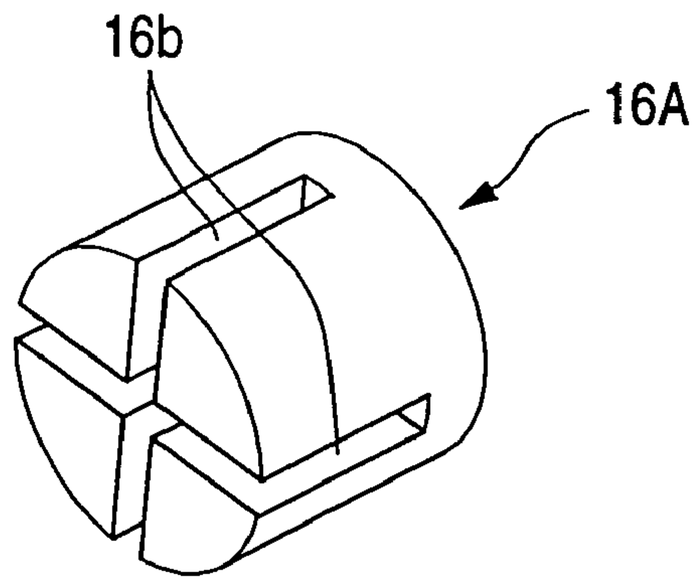

FIG. 32B

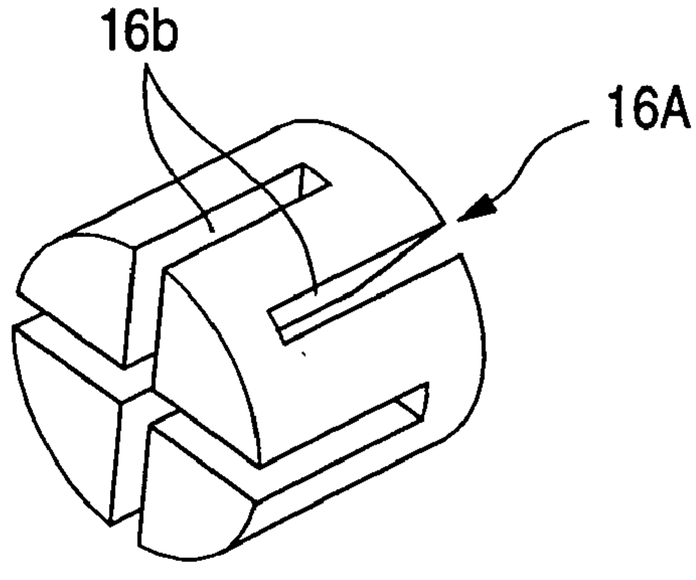

FIG. 32C

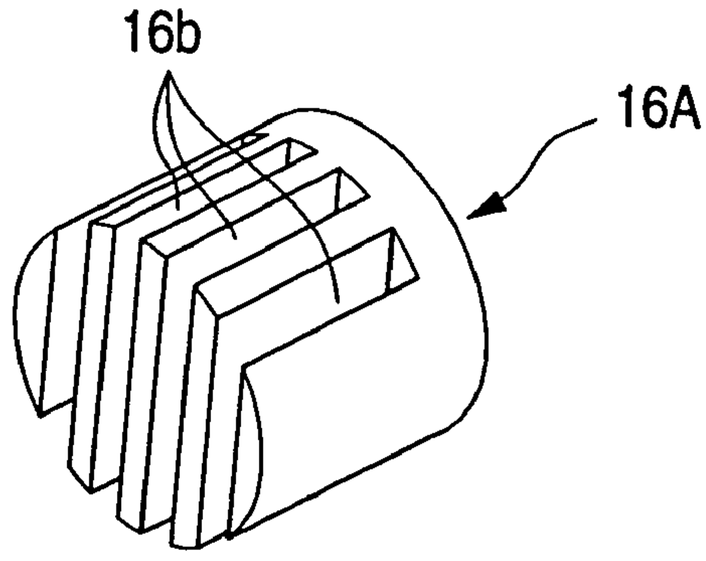

FIG. 33

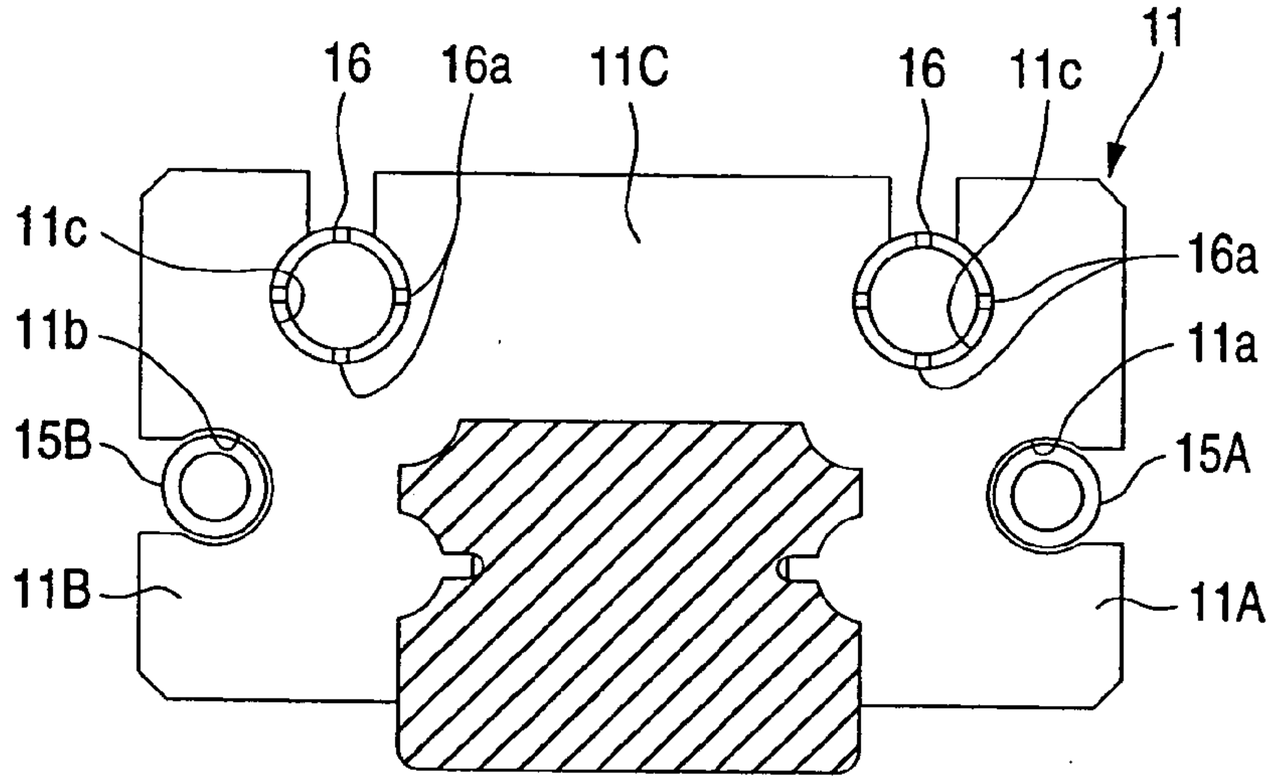

FIG. 34

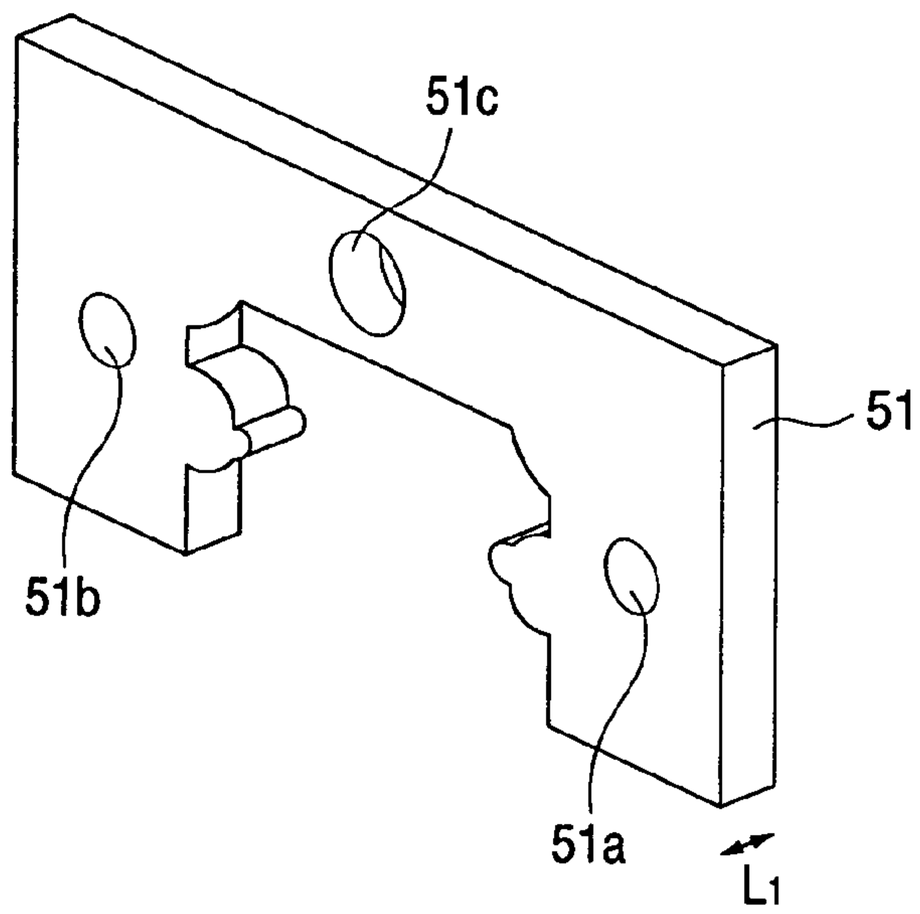

FIG. 35

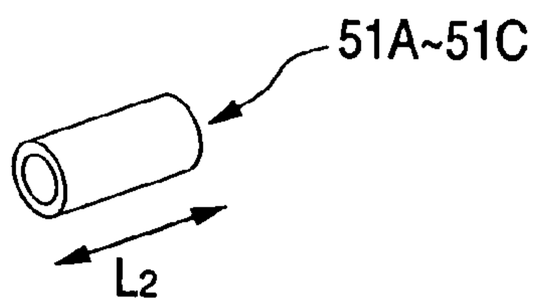

FIG. 36

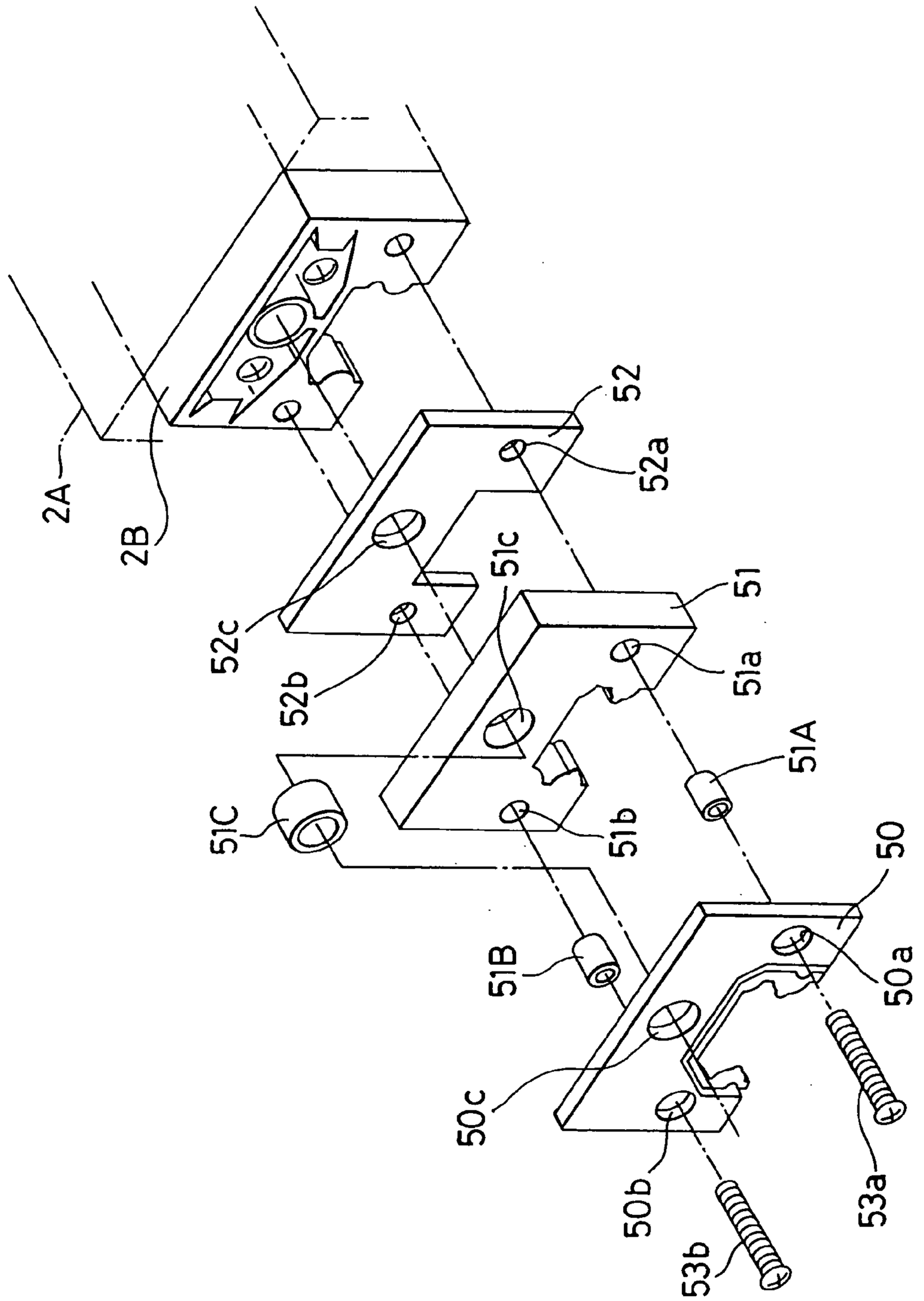
52
52a
2A
2B
52c
52b
51c
51
51a
51A
51C
51b
50
51B
50a
50c
50b
53a
53b

FIG. 37
PRIOR ART

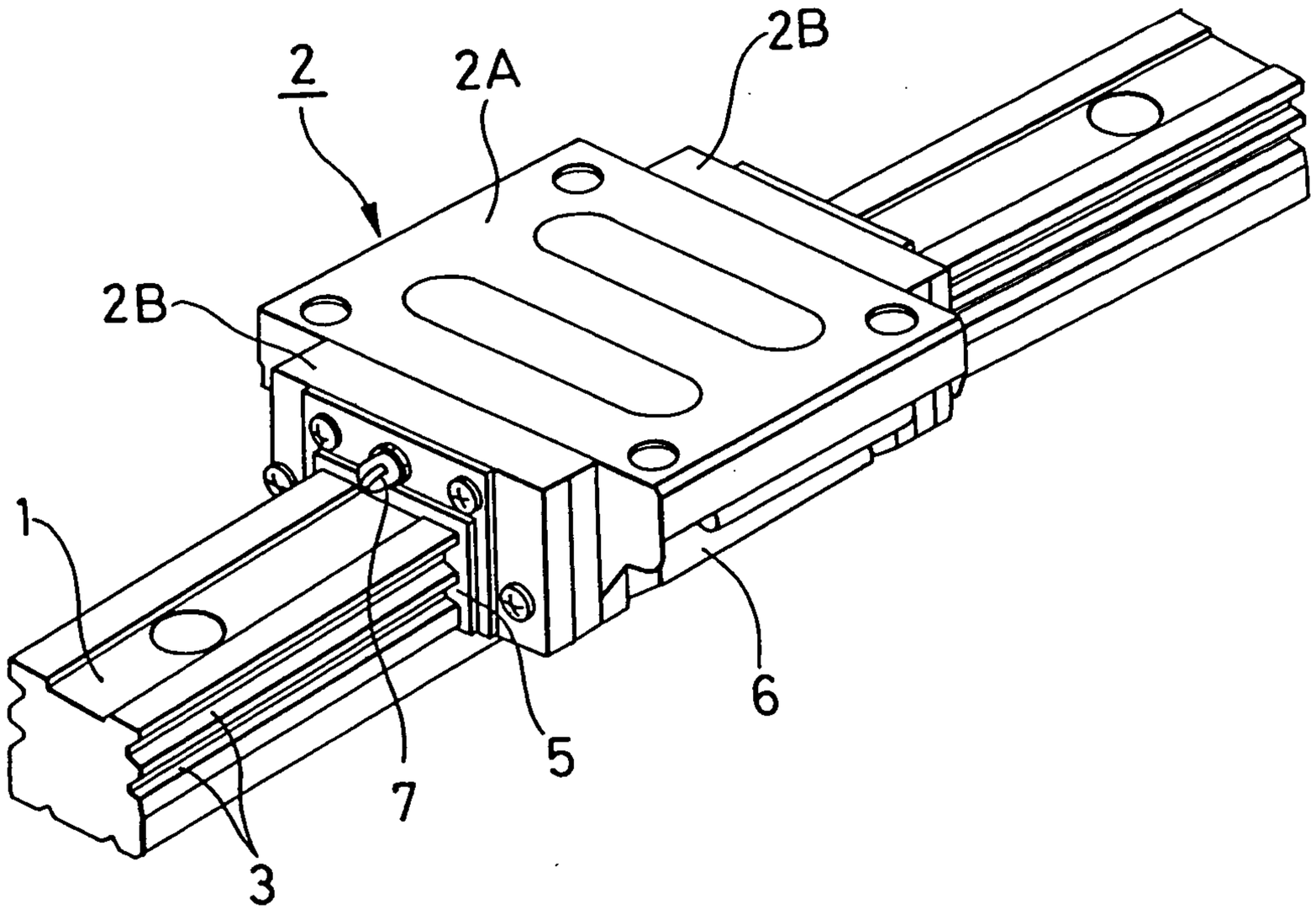

FIG. 38
PRIOR ART

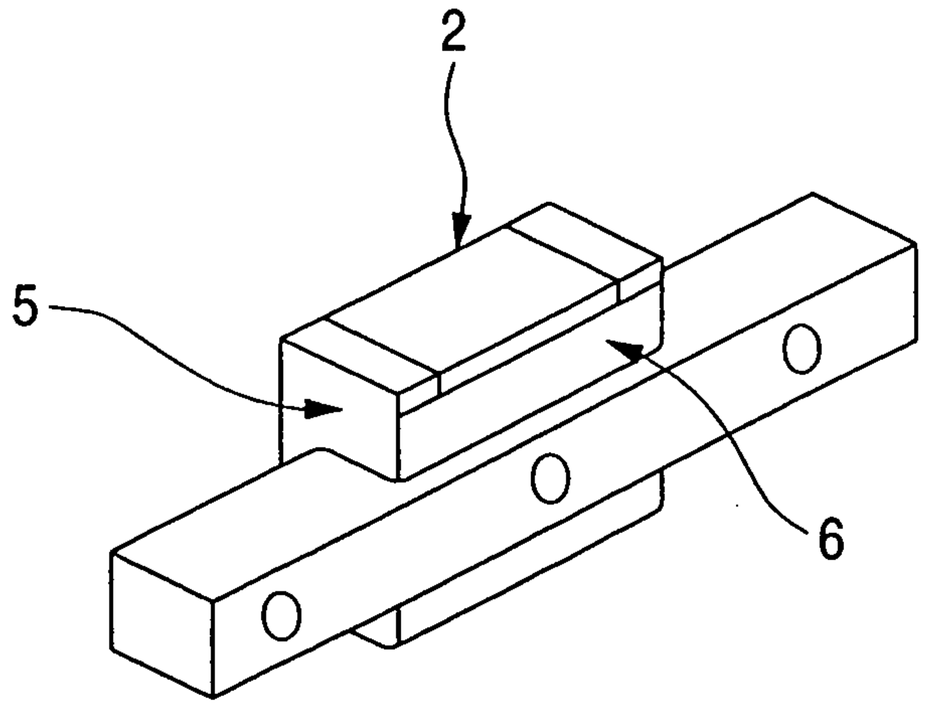

FIG. 39

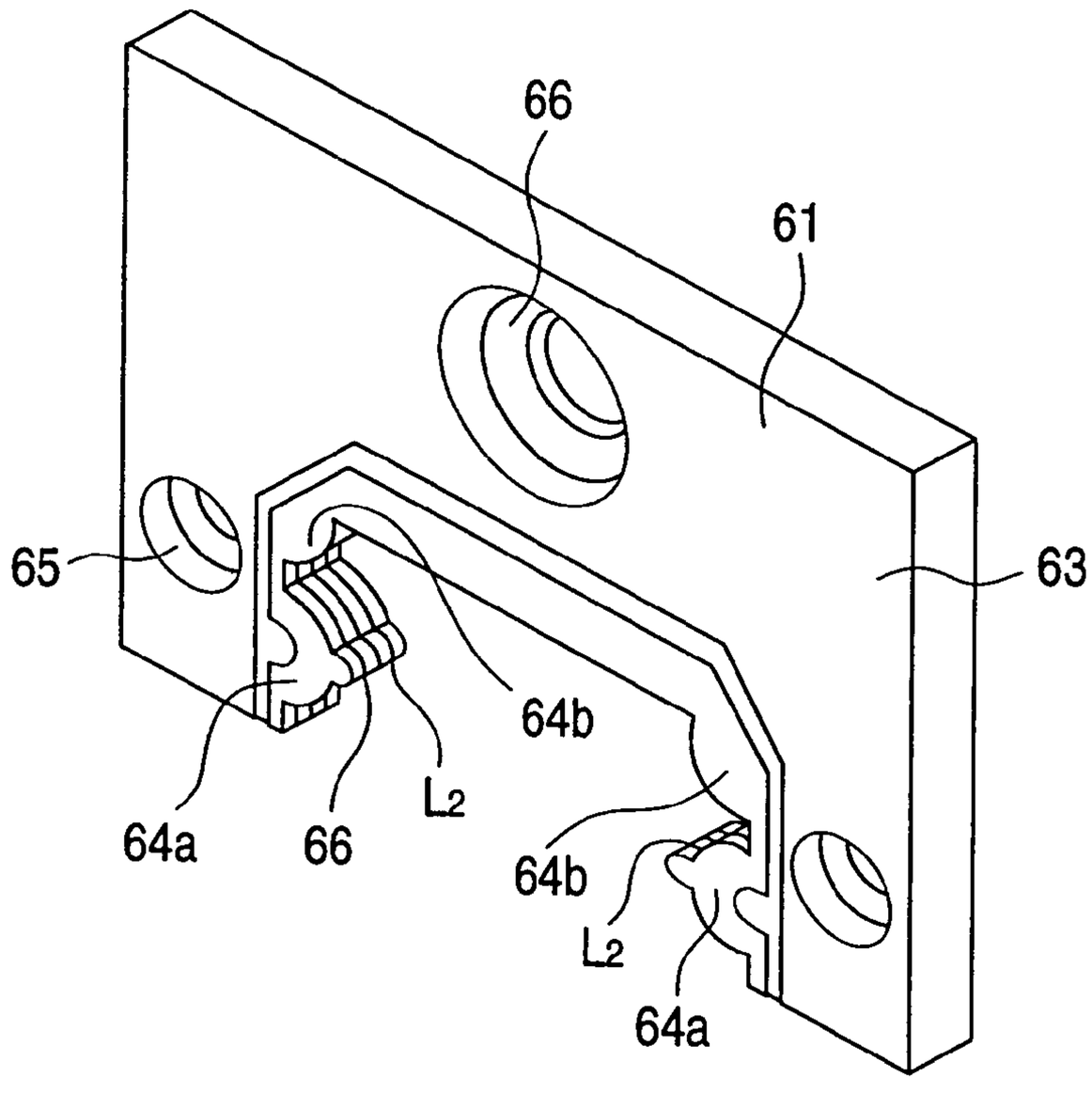

FIG. 40

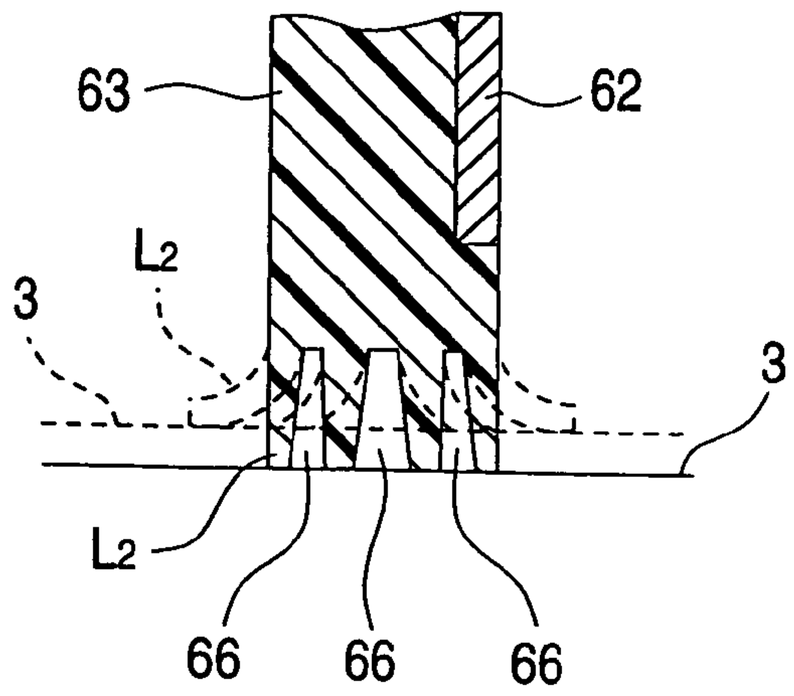

FIG. 41

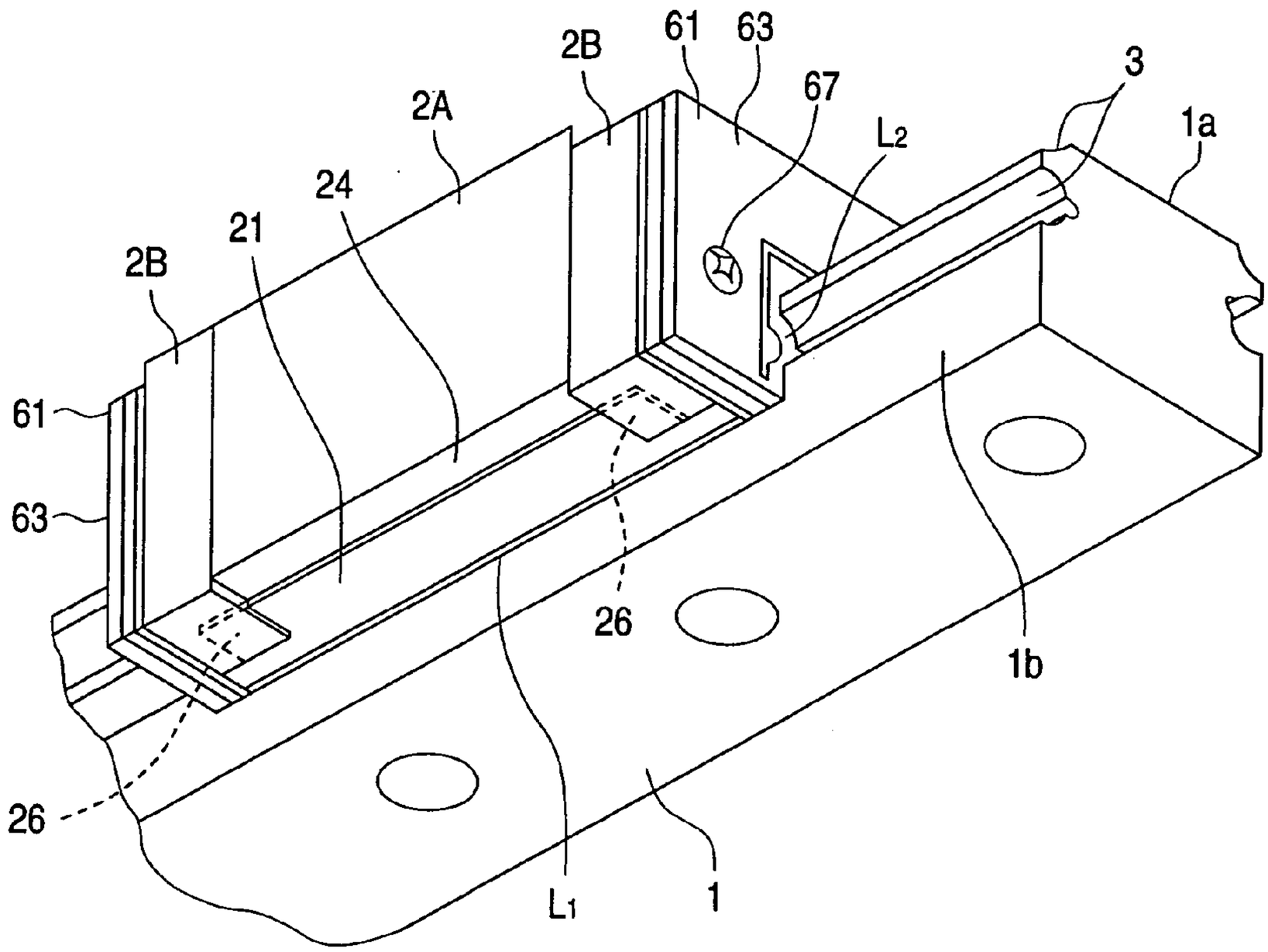

FIG. 42

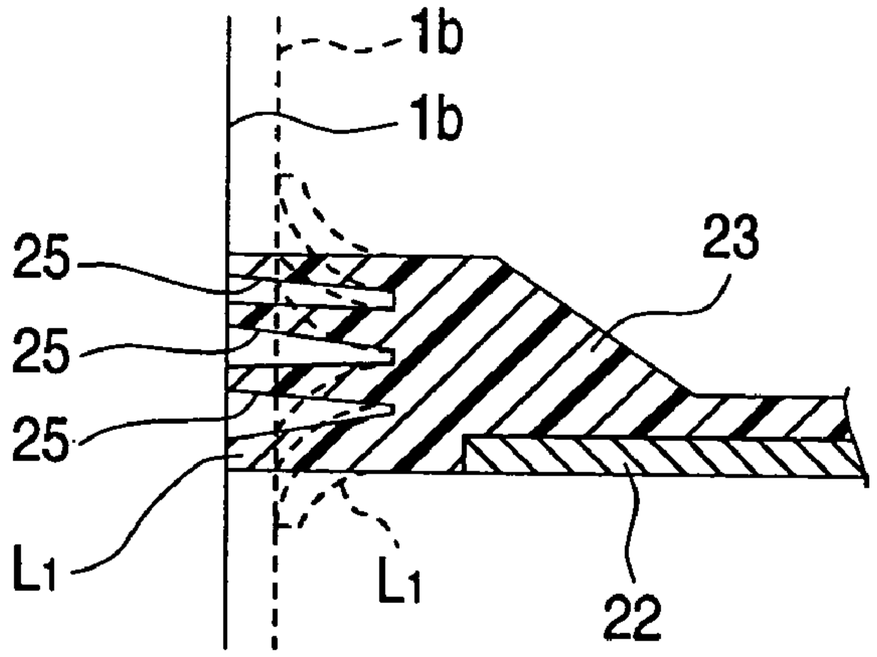

FIG. 43

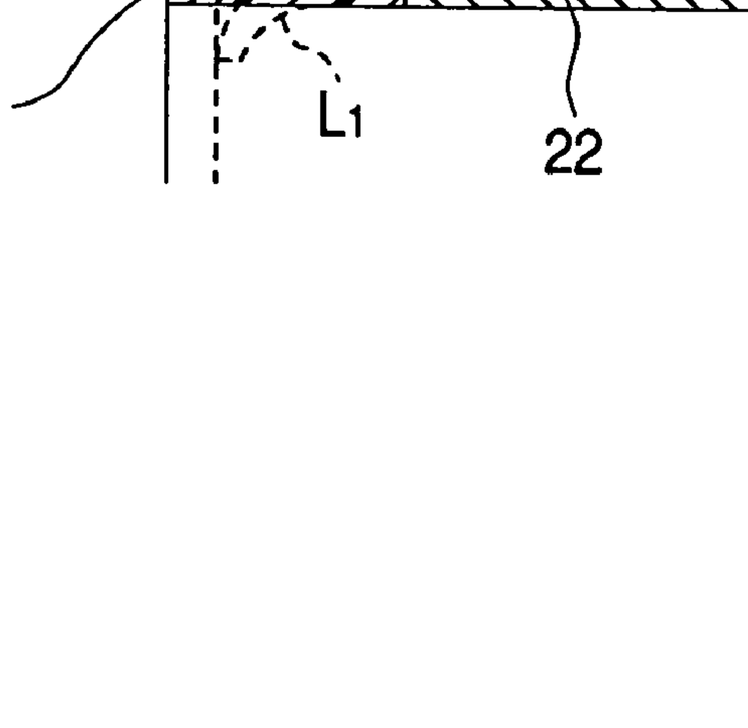

FIG. 44

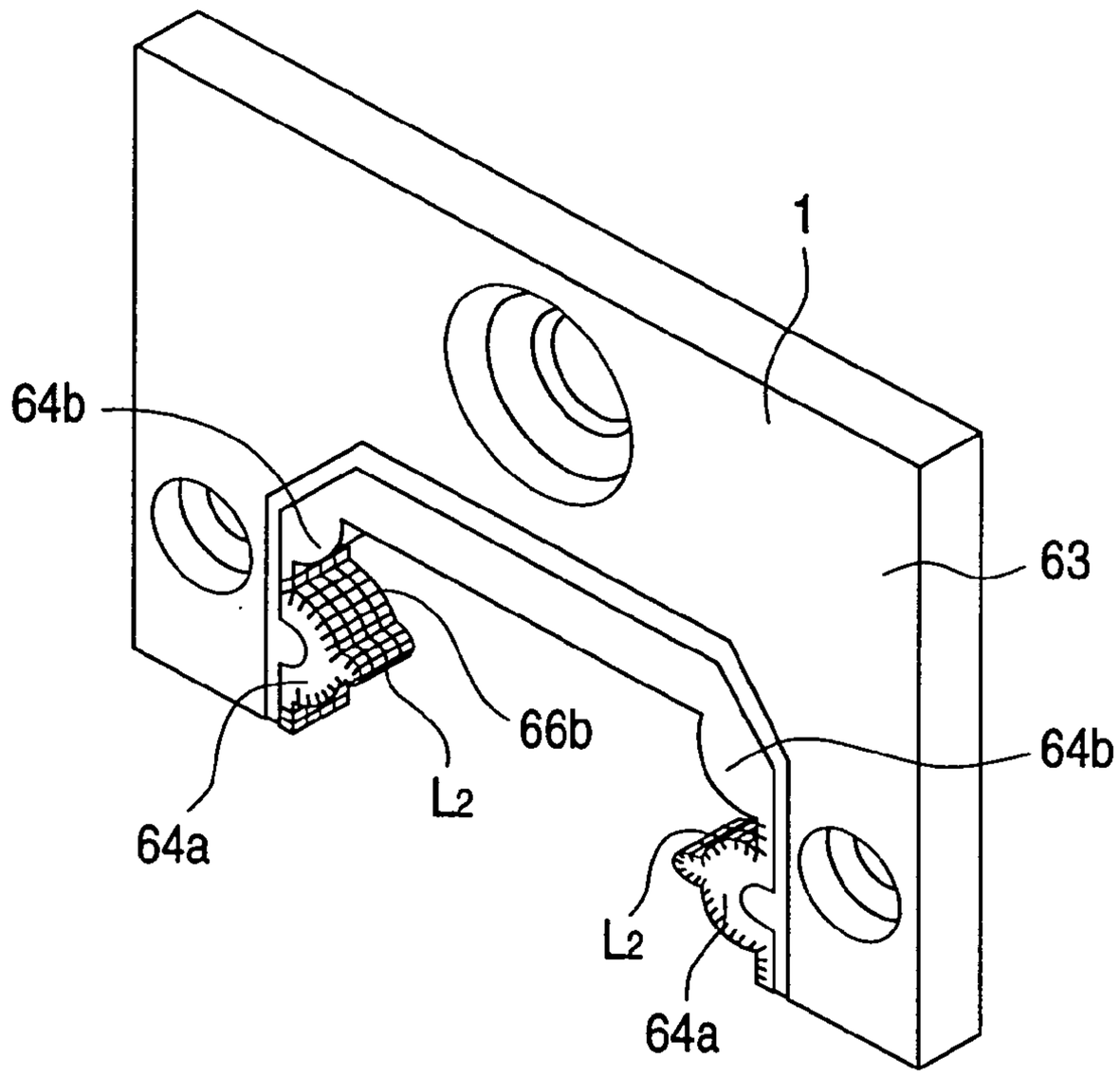

FIG. 45

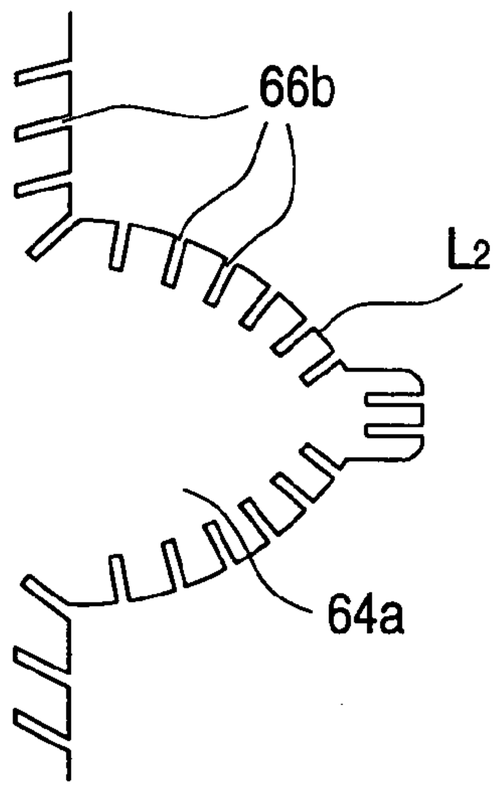

FIG. 46

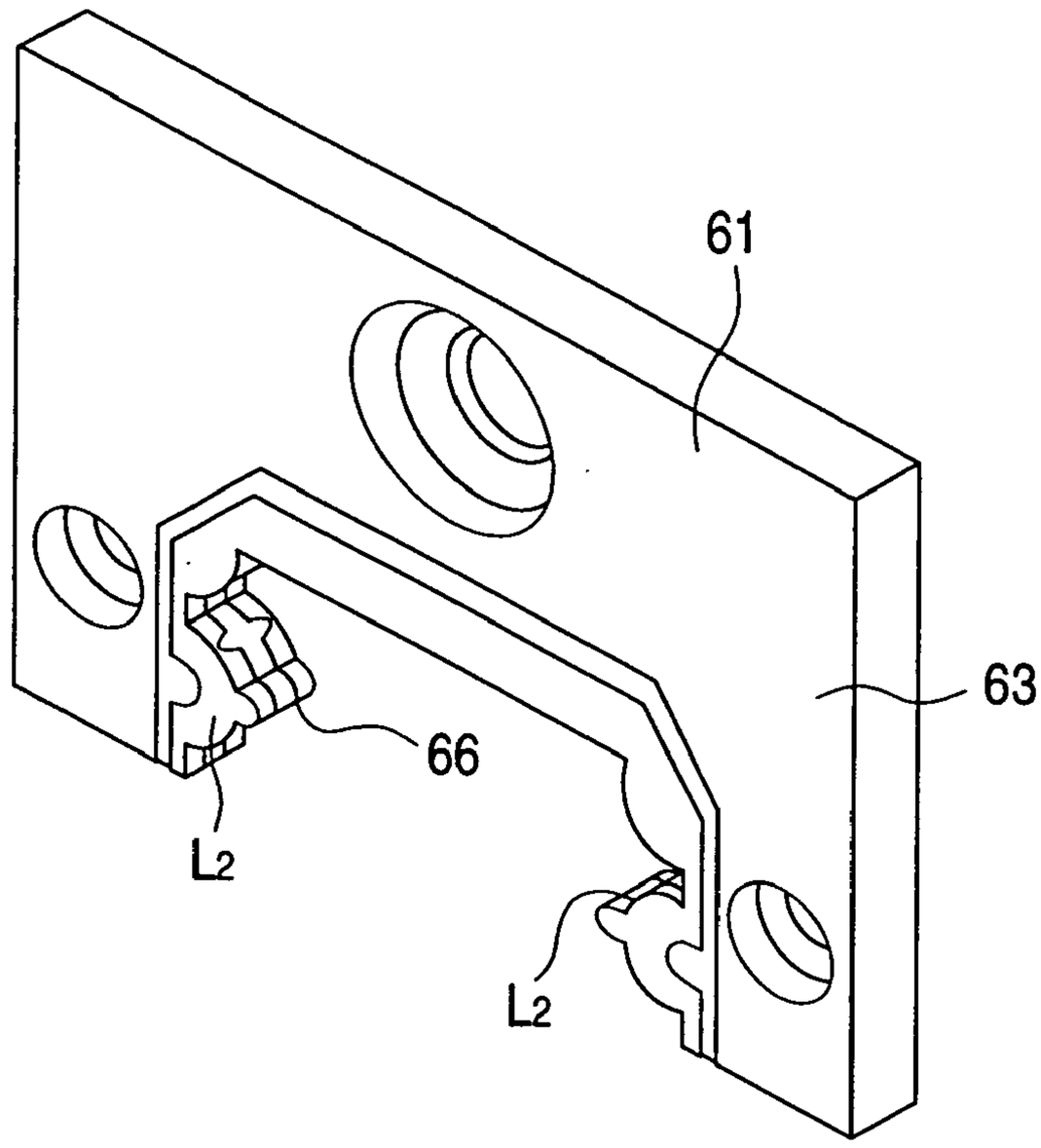

FIG. 47

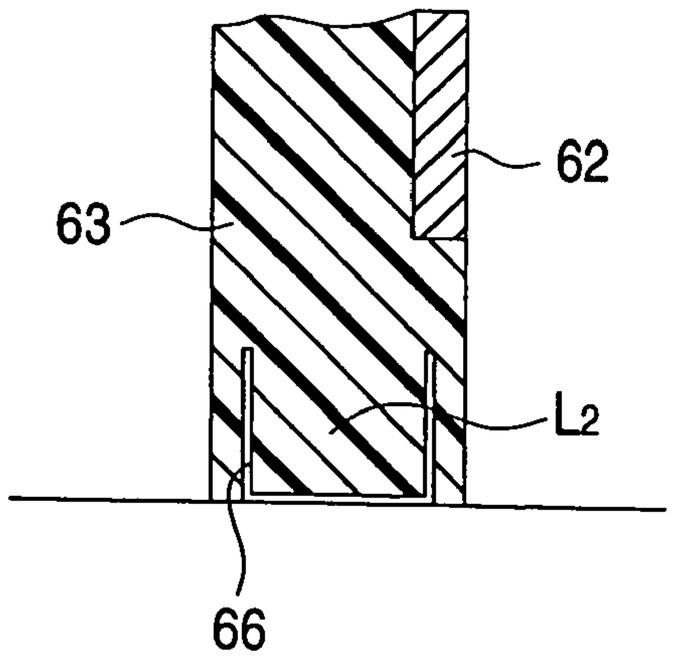

FIG. 48

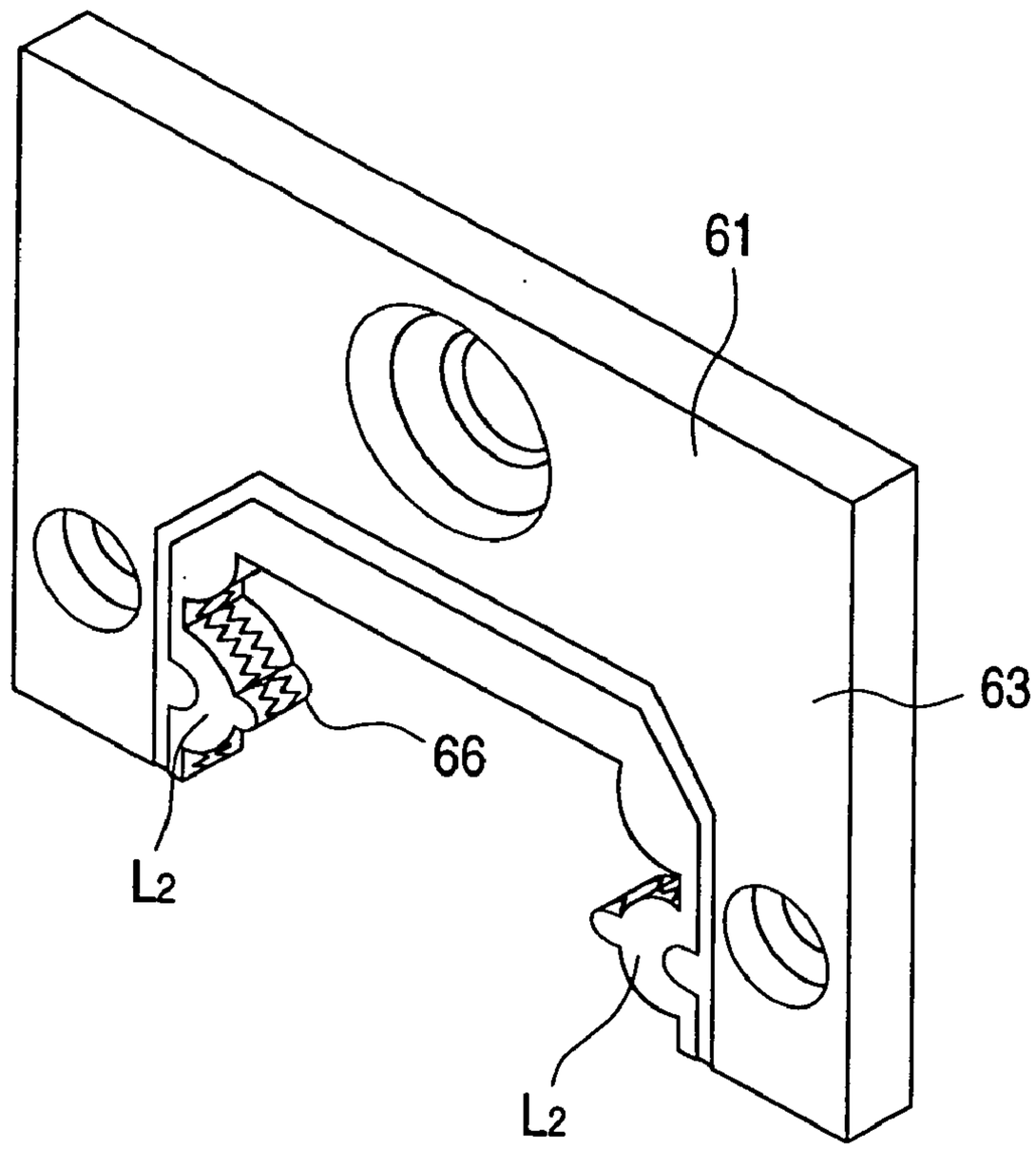

FIG. 49

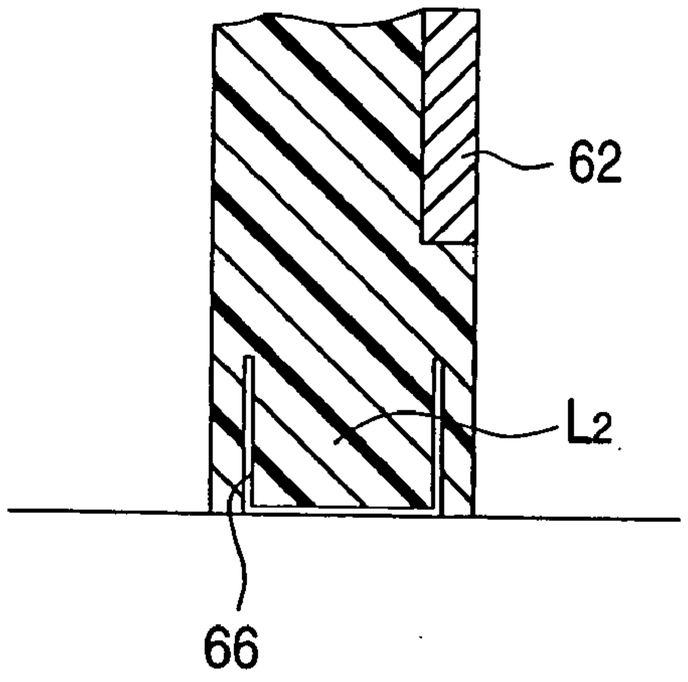

FIG. 50

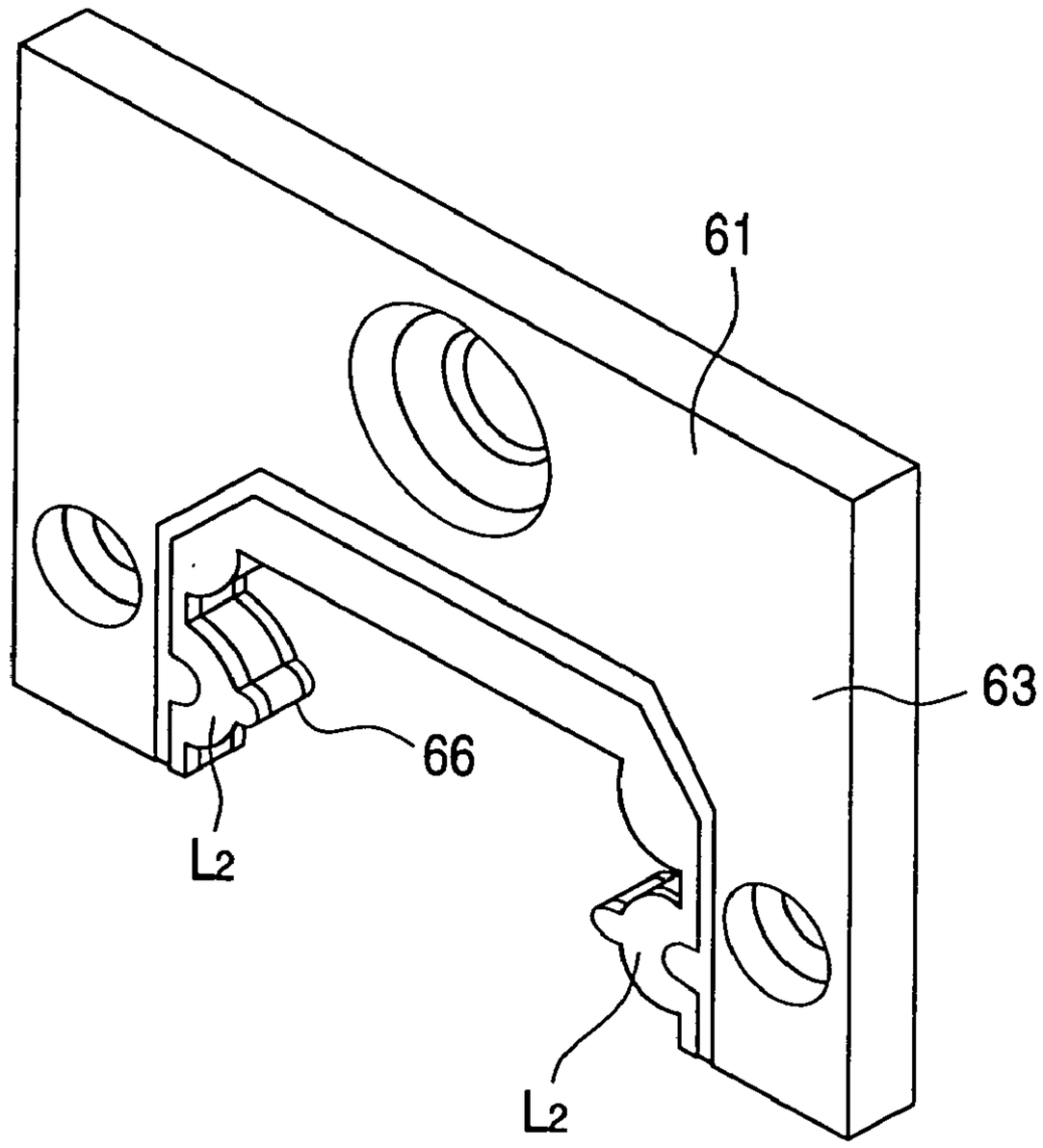

FIG. 51

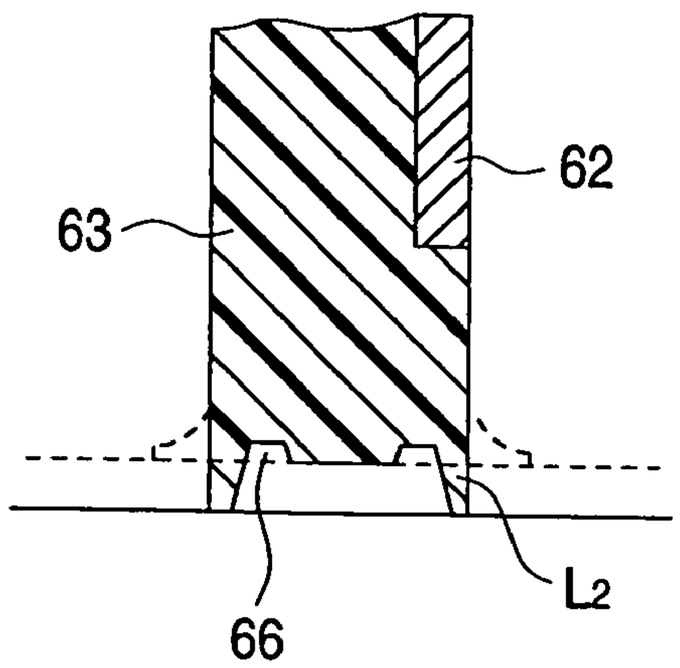

FIG. 52

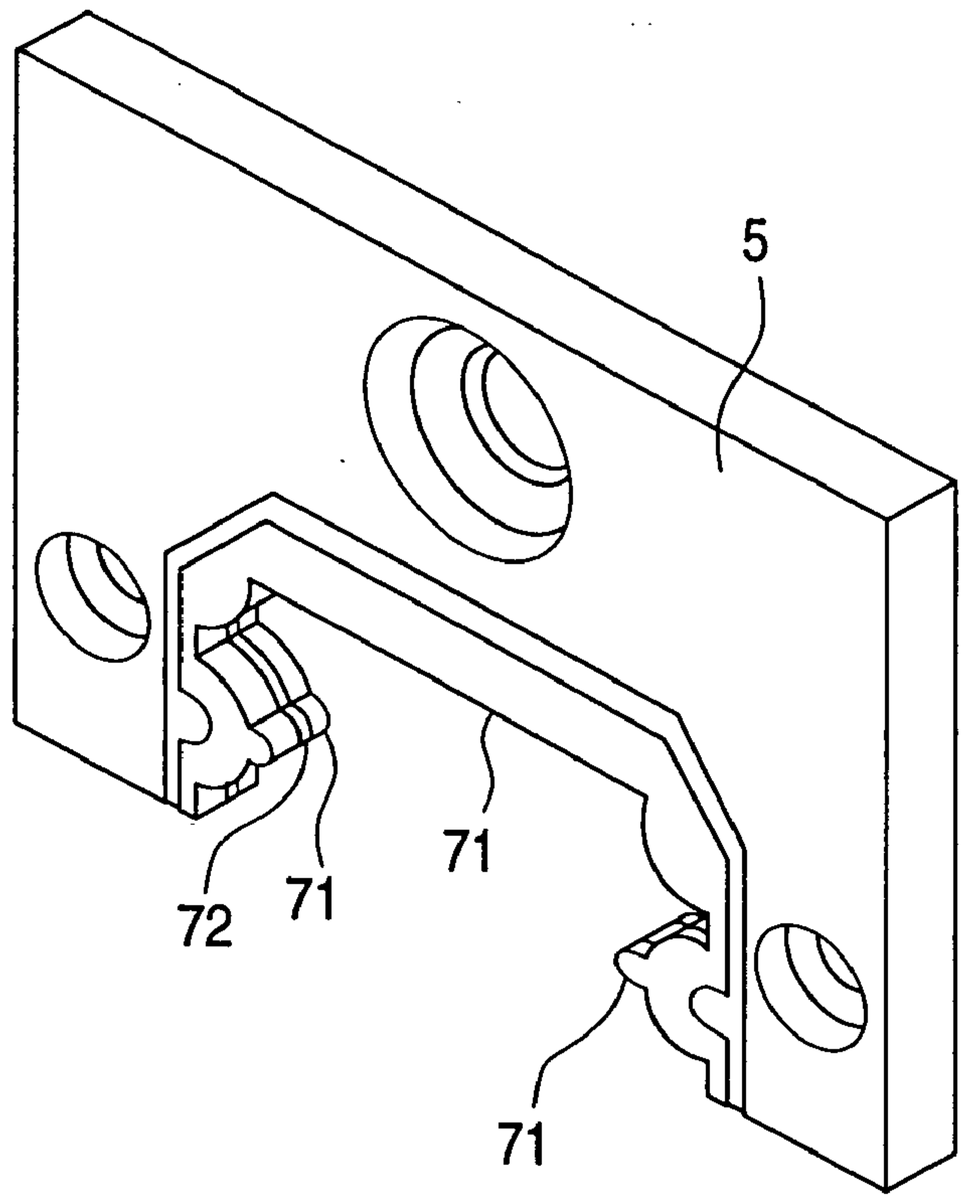

FIG. 53A

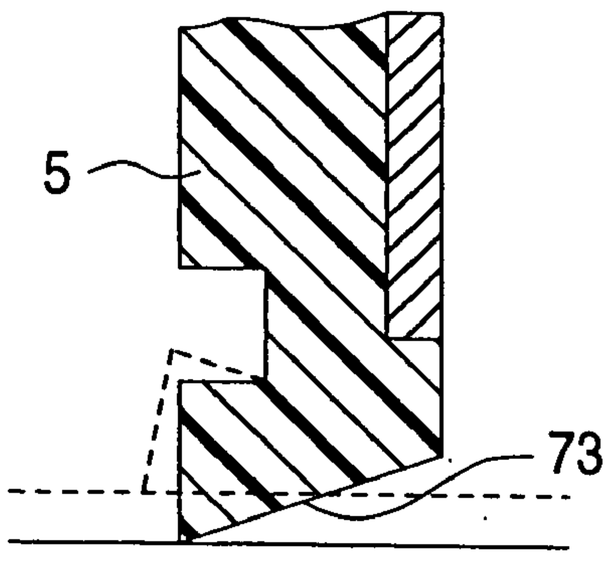

FIG. 53B

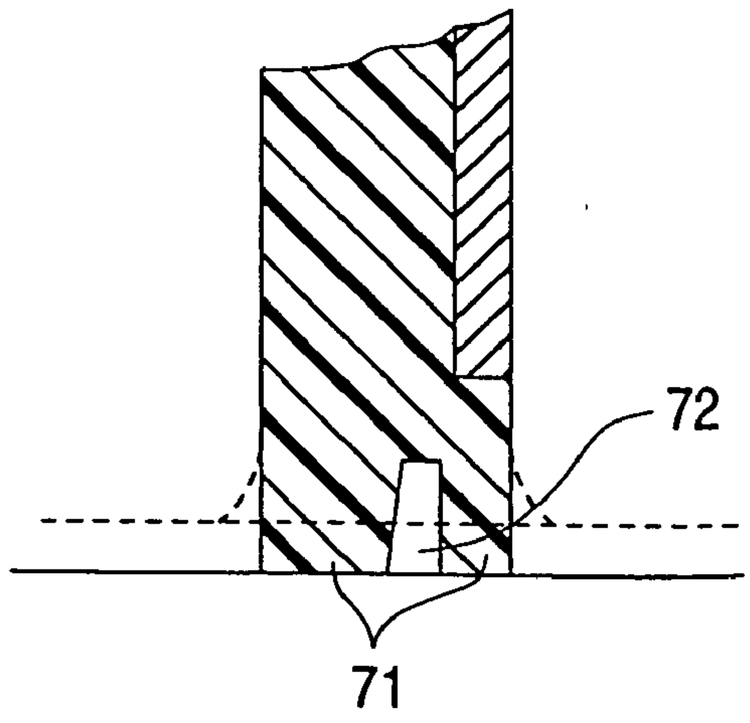

SEALING DEVICE FOR LINEAR GUIDE APPARATUS

BACKGROUND OF THE INVENTION

[0001] The present invention relates to a linear guide apparatus, and more particularly relates to a sealing device for a linear guide apparatus which lubricant can be stably fed to the rolling elements over a long period of time.

[0002] Further, the present invention relates to a linear guide apparatus, and more particularly relates to a linear guide apparatus, to the lip portion of the sealing device of which lubricant can be automatically fed, so that the life of the sealing device can be prolonged.

[0003] A first conventional example will be described as follows. An example of the conventional linear guide apparatus, which is commonly used, is shown in **FIG. 37**. This conventional linear guide apparatus includes: a guide rail **1** extending in the axial direction, on the outer surface of which a rolling element rolling groove **3** is formed; and a slider **2** incorporated to the guide rail **1** in such a manner that the slider **2** strides the guide rail **1**. The slider **2** is composed of a slider body **2**A and end caps **2**B attached to both ends of the slider body **2**A. On inner side surfaces of both wing portions **4** of the slider body **2**A, there are provided rolling element rolling grooves (not shown in the drawing) which are opposed to the rolling element rolling groove **3** formed on the guide rail **1**. Also, in the slider body **2**A, there are provided rolling element returning paths (not shown) which penetrate thick portions of the wing portions of the slider body **2**A. On the other hands, the end caps **2**B have curved paths (not shown) which communicate the rolling element rolling grooves of the slider body **2**A with the rolling element returning paths formed in parallel to the rolling element rolling grooves. In this way, a circulation circuit of the rolling elements is formed by the rolling element rolling grooves, the rolling element returning paths and the curved paths formed on both sides. For example, a large number of rolling elements composed of steel balls are charged into the circulation circuit in which the rolling elements are circulated.

[0004] The slider **2** incorporated to the guide rail **1** is smoothly moved along the guide rail **1** when the rolling elements are rolling in both rolling element grooves which are opposed to each other. While the rolling elements are rolling in this way, they circulate endlessly in the rolling element circulation passages formed in the slider.

[0005] As a sealing device to seal an opening between the slider **2** and the guide rail **1** for the purpose of dust protection, as shown in **FIG. 38**, there are provided side seals **5** on both ends (end faces of the end caps **2**B), and also there is provided an under seal **6** on the lower surface of the slider **2**. Conventionally, these seals are made of rubber such as NBR (acrylonitrile butadiene rubber). In this connection, reference numeral **7** in **FIG. 37** is a grease nipple.

[0006] A second conventional example of the linear guide apparatus is disclosed in Unexamined Japanese Patent Publication No. Hei. 6-346919 previously proposed by the present applicant. A third conventional example of the linear guide apparatus is disclosed in Unexamined Japanese Patent Publication No. Hei. 7-35146 previously proposed by the present applicant.

[0007] The second conventional example will be described as follows. Between the outer surface of the guide rail and the inner surface of the slider moving along the guide rail, there is provided a seal device having a seal lip portion made of rubber or synthetic resin containing lubricant. The seal lip portion comes into contact with an outer surface of the guide rail and seals a gap formed between the inner surface of the slider and the outer surface of the guide rail. Since the seal lip portion of the seal device is made of rubber or synthetic resin containing lubricant so that the seal lip portion has a self-lubricating property, the lubricant contained in the seal gradually oozes out and is automatically fed to a frictional surface of the seal portion. Therefore, the abrasion of the seal lip portion can be suppressed.

[0008] The third conventional example will be described as follows. At least a portion of the layer made of rubber or synthetic resin and a portion of the layer made of rubber or synthetic resin containing lubricant are overlapped and integrally joined. At least, on the layer of rubber or synthetic resin containing lubricant, there is formed a seal lip portion which comes into contact with an outer surface of the guide rail so as to seal a gap formed between the inner surface of the slider and the outer surface of the guide rail. Since the seal lip portion also has a self-lubricating property in this third conventional example, lubricant Contained in the seal itself gradually oozes out and is fed to a frictional surface of the seal, so that the abrasion of the lip portion can be suppressed. Since the layers are overlapped as described above in the third conventional example, it is possible to provide the following advantages. When the number and thickness of the overlapped layers are appropriately determined, the mechanical strength of the seal lip portion can be arbitrarily set in accordance with the use of the linear guide apparatus.

[0009] As shown in FIGS. **52** to **53**B, the sealing device of the second conventional example is described as follows. Lubricant is made to ooze from a surface of the guide rail **1** by the action of contact resistance of the seal **11**. Accordingly, there is provided no relief **10***a* as shown in **FIG. 53A** in the contact portion **11***a* shown in **FIG. 53B** where the seal **11** comes into contact with the guide rail **1**, but an area of the portion where the seal **11** comes into contact with the guide rail **1** is increased. Further, there is formed a recessed groove **12** in the contact portion **11***a* where the seal **11** comes into contact with the guide rail **1**, so that the portion **11***a* is divided into two portions. Then the thus divided portions are contacted with the guide rail **1** by two steps. Therefore, the intrusion of foreign objects can be prevented by the contact of two steps better than the contact of one step. Further, lubricant can be held by the recessed groove **12**, so that the sliding property of the seal **11** can be enhanced.

[0010] However, the above conventional linear guide apparatus has the following disadvantages.

[0011] As the slider **2** runs along the guide rail **1**, a quantity of grease previously charged inside the slider **2** is decreased. Therefore, the lubrication between the lip portion of the side seal **5** and the guide rail **1** becomes poor, and also the lubrication between the lip portion of the under seal **6** and the guide rail **1** becomes poor. Due to the poor lubrication, the lip portions gradually wears away. Due to the progress of abrasion, the sealing property is deteriorated,

and foreign objects such as cutting chips enter the inside of the slider **2**, which shortens the life of the linear guide apparatus in some cases.

[**0012**] When the slider **2** runs and the rolling elements roll, grease can be fed to the rolling element rolling groove **3** of the guide rail **1** via the rolling elements. Accordingly, the abrasion is relatively small in a portion of the lip which comes into contact with the rolling element rolling groove **3**. On the other hand, the abrasion tends to increase in a portion of the lip which comes into contact with an upper surface of the rail to which no grease is fed because of poor lubrication. Due to the foregoing, the lip portion wears away and damaged. In this way, the life of the linear guide apparatus is shortened.

[**0013**] From this point of view, when the above second example and the third one are adopted, the abrasion of the seal lip portion can be suppressed since the seal lip portion has a self-lubricating property. However, even in the above conventional examples, the following problems may be encountered. A quantity of lubricant oozing from rubber or synthetic resin containing lubricant is not sufficient to lubricate the balls and rollers which guide the movement of the slider of the linear guide apparatus, that is, it is difficult to maintain smooth rolling motions of the rolling elements such as balls and rollers.

[**0014**] In the sealing device containing lubricant of the above second conventional example or the third one, the seal lip portion is pressed against the guide rail only by the elasticity of the seal itself. Accordingly, it is possible to provide a sufficiently high pressing force as a seal, however, it is impossible to provide a sufficiently high pressing force as a lubricant feed unit.

[**0015**] Further, a shape of each portion of the guide rail **1** with which the seal **11** comes into contact, for example, a shape of the ball rolling groove, the guide rail side surface or the upper surface of the guide rail is complicated, and further the seal **11** is attached being a little displaced. Therefore, it is difficult for the seal **11** to be positively contacted with each portion of the guide rail **1**. Accordingly, a sufficient quantity of lubricant can not be provided and the dust protecting property is deteriorated. As a result, the lubricant in the slider **2** is widely diffused.

SUMMARY OF THE INVENTION

[**0016**] The present invention has been accomplished to solve problems caused in a conventional linear guide apparatus. An object of the present invention is to provide a linear guide apparatus in which the abrasion of a sealing device is reduced by directly feeding lubricant to the lip portion or by feeding lubricant via the guide rail, so that a high sealing property can be maintained in the linear guide apparatus over a long period of time.

[**0017**] Another object of the present invention is to provide a linear guide apparatus in which lubricant can be fed at all times so as to maintain a smooth rolling motion of the rolling elements.

[**0018**] Still another object of the present invention is to provide a linear guide sealing device in which the seal can be positively contacted with each portion while the seal precisely follows the shape of each portion.

[**0019**] The objects of the invention are achieved by a linear guide apparatus which includes: an axially extending guide rail having a first rolling groove on its outer surface; a slider engaged with the guide rail and having a second rolling groove, rolling element return grooves and curved grooves, the second rolling groove confronting the first rolling groove, the rolling element return grooves being coupled to both end portions of the second rolling groove through the curved grooves, respectively; a plurality of rolling elements loaded into the slider to be made circulatable through the second rolling groove, the curved grooves, and the rolling element return grooves; and a sealing device fixed to the slider in slidable contact with the guide rail for sealing a clearance existing between the guide rail and the slider, the sealing device comprising: a lubricant-containing polymer member formed of a synthetic resin contfaining a lubricant, and having a contact portion contacting with the guide rail to surround the guide rail, both wing portions, a connecting portion connecting the wing portions to be C-shaped substantially, and a first plate member fitted to the lubricant-containing polymer member in which the lubricant-containing polymer member is interposed between the slider and the first plate member.

[**0020**] According to the invention, since a lubricant-containing polymer member is arranged close to the lip portion of a side seal which is provided in the sealing device, lubricant that has gradually oozed from the lubricant-containing polymer member is easily fed to the lip portion, so that the lip portion can be stably lubricated over a long period of time.

[**0021**] In addition, since at least a portion of the inner circumferential surface of the lubricant-containing polymer member comes into contact with the outer circumferential surface of the guide rail, the lip portion can be fed with lubricant via the guide rail. Therefore, it is possible to feed lubricant to the lip portion very stably. Accordingly, the abrasion of the lip portion can be minimized, and the sealing property of the sealing device can be maintained to be high over a long period of time.

[**0022**] Lubricant that has oozed from the lubricant-containing polymer member is also fed to the rolling elements via the guide rail. Accordingly, even when grease is exhausted from the apparatus for some reasons, the lubricant that has oozed out from the lubricant-containing polymer member functions as a lubricant of the linear guide apparatus itself.

[**0023**] Especially when the lubricant-containing polymer member is interposed between the slider end face and the side seal, the leakage of grease from the device can be reduced. The reason is described as follows. Conventionally, the lip portion of the sealing device gets rolled up during a normal reciprocating motion of the slider. At this time, grease leaks out from the device. On the other hand, according to the invention, the lubricant-containing polymer member is interposed between the slider end face and the side seal. Therefore, the lip portion is difficult to get rolled up, and the leakage of grease from the device can be reduced. In the case where the side seal is composed of a polyurethane rubber member containing grease which works as lubricant, the abrasion of the lip portion of the sealing device can be further reduced.

[**0024**] Further, according to the invention, when lubricant oozes from the lubricant-containing member which strides

the guide rail, the lubricant-containing member shrinks by itself, so that a distance between both wing portions of the lubricant-containing member, which is arranged in a C-shape, is reduced, and further the inside faces of both wing portions of the lubricant-containing member, that is, the faces opposed to the side faces of the guide rail, are pushed against the guide rail. Therefore, the lubricant-containing member comes into contact with the guide rail at all times. Due to the pushing force generated by the pushing means, no gap is formed between the guide rail and the lubricant-containing member irrespective of errors caused in the manufacturing process. Therefore, the lubricant oozing from the lubricant-containing member can be stably fed to the guide rail. Particularly, the shape of the bottom surface of the C-shaped lubricant-containing member is formed into a predetermined shape of an arc. Therefore, even when the lubricant-containing member is deformed by the pushing force of the pushing means so that both wing portions are pressed against the guide rail, the shape of the arc on the bottom surface is put into a horizontal condition. Consequently, the lubricant-containing member stably comes into S contact with the guide rail.

[**0025**] Moreover, according to the invention, a plurality of cutout portions are formed in a portion of the seal lip which comes into pressure contact with an outer surface of the guide rail. Therefore, the seal lip in which a plurality of cutout portions are formed can be contacted with the outer surface of the guide rail, the shape of which is complicated. In this way, the seal lip can easily follow the shape of the guide rail. Even when the lubricant feed device is dislocated in the assembling process, the seal lip having the cutout portions is deformed, so that the dislocation can be absorbed, and no gap is formed between the seal lip portion and the guide rail.

[**0026**] When a plurality of cutout portions are formed in the seal lip portion, the contact area of the seal lip portion with the guide rail can be increased, so that a quantity of lubricant oozing from the seal lip portion can be increased. When the seal lip portion is provided with a plurality of cutout portions, a space in which the lubricant is held can be increased as compared with a conventional arrangement. Therefore, the sliding property of the seal lip portion can be enhanced. Further, the number of the seal lip portions is increased as compared with a conventional arrangement, so that the intrusion of dirt and dust from the outside can be prevented, and the lubricant can be prevented from diffusing to the outside.

BRIEF DESCRIPTION OF THE DRAWINGS

[**0027**] **FIG. 1** is a perspective view of the linear guide apparatus of a first embodiment of the present invention;

[**0028**] **FIG. 2** is a perspective view showing a condition in which each member of a sealing device is attached to the end portion of the linear guide apparatus;

[**0029**] **FIGS. 3A and 3B** are views showing an arrangement of the lubricant-containing member of the second embodiment;

[**0030**] **FIGS. 4A and 4B** are views showing an arrangement of the ring-shaped member;

[**0031**] **FIGS. 5A and 5B** are views showing an arrangement of the ring-shaped member;

[**0032**] **FIG. 6** is a side view of the lubricant-containing member in a condition that the ring-shaped member is attached;

[**0033**] **FIG. 7** is a front view of the lubricant-containing member which strides a guide rail;

[**0034**] **FIGS. 8A and 8B** are schematic illustrations showing the mode of operation;

[**0035**] **FIG. 9** is a front view showing an arrangement of the lubricant-containing member of a third embodiment of the present invention;

[**0036**] **FIG. 10** is a schematic illustration showing the mode of operation of the third embodiment;

[**0037**] **FIG. 11** is a perspective view showing an attaching condition of each member of a sealing device of a fourth embodiment;

[**0038**] **FIGS. 12A and 12B** are views showing an arrangement of the lubricant-containing member of the fourth embodiment;

[**0039**] **FIGS. 13A and 13B** are views showing an arrangement of the elastic body of the fourth embodiment;

[**0040**] **FIG. 14** is a schematic illustration of the mode of operation of the fourth embodiment;

[**0041**] **FIG. 15** is a schematic illustration of the mode of operation of the fourth embodiment;

[**0042**] **FIG. 16** is a front view of the lubricant-containing member of the fourth embodiment, wherein the view shows a condition in which the member strides the guide rail;

[**0043**] **FIG. 17** is a side view of the lubricant-containing member of the fourth embodiment, wherein a ring-shaped member is attached to the member;

[**0044**] **FIGS. 18A and 18B** are views showing an arrangement of the lubricant-containing member of a fifth embodiment of the present invention;

[**0045**] **FIGS. 19A and 19B** are views showing an arrangement of the lubricant-containing member of a sixth embodiment of the present invention;

[**0046**] **FIG. 20** is a view showing an arrangement of the elastic body of the sixth embodiment;

[**0047**] **FIGS. 21A and 21B** are schematic illustrations showing an assembling condition of the sixth embodiment;

[**0048**] **FIG. 22** is a perspective view of the linear guide apparatus of the sixth embodiment;

[**0049**] **FIG. 23** is a front view of the lubricant-containing member of a seventh embodiment of the present invention;

[**0050**] **FIG. 24** is a view of the lubricant-containing member of an eighth embodiment of the present invention;

[**0051**] **FIGS. 25A and 25B** are views showing an arrangement of the elastic body of the eighth embodiment;

[**0052**] **FIGS. 26A and 26B** are schematic illustrations showing an assembling condition of the eighth embodiment;

[**0053**] **FIG. 27** is a front view of the lubricant-containing member of a ninth embodiment of the present invention;

[0054] **FIGS. 28A and 28B** are views showing an arrangement of the elastic body of the ninth embodiment;

[0055] **FIGS. 29A and 29B** are schematic illustrations showing an assembling condition of the ninth embodiment;

[0056] **FIGS. 30A and 30B** are front views showing an arrangement of a tenth embodiment of the present invention;

[0057] **FIGS. 31A** to **31**D are perspective views showing an eleventh embodiment of the present invention;

[0058] **FIGS. 32A** to **32**C are perspective views showing variations of the eleventh embodiment;

[0059] **FIG. 33** is a front view showing an arrangement of a twelfth embodiment of the present invention;

[0060] **FIG. 34** is a perspective view of the lubricant-containing polymer member of the first embodiment of the present invention;

[0061] **FIG. 35** is a perspective view of the sleeve inserted into the lubricant-containing polymer member;

[0062] **FIG. 36** is a perspective view showing an attaching condition of each member of a sealing device of the linear guide apparatus end portion;

[0063] **FIG. 37** is a perspective view of the conventional linear guide apparatus;

[0064] **FIG. 38** is a perspective view of the lower surface side of the linear guide apparatus shown in **FIG. 37**;

[0065] **FIG. 39** is an overall perspective view of the side seal composing a portion of the sealing device according to a thirteenth embodiment of the present invention;

[0066] **FIG. 40** is an enlarged cross-sectional view of the seal lip of the side seal of the thirteenth embodiment;

[0067] **FIG. 41** is a perspective view taken from the lower side of the linear guide apparatus of the thirteenth embodiment;

[0068] **FIG. 42** is an enlarged cross-sectional view of the seal lip of the under seal of the thirteenth embodiment;

[0069] **FIG. 43** is a schematic cross-sectional view for explaining a variation of the side seal of the thirteenth embodiment;

[0070] **FIG. 44** is a schematic perspective view for explaining another variation of the side seal;

[0071] **FIG. 45** is a partially enlarged view of the seal lip of the side seal shown in **FIG. 44**;

[0072] **FIG. 46** is a schematic perspective view for explaining another variation of the side seal;

[0073] **FIG. 47** is a partially enlarged view of the seal lip of the side seal shown in **FIG. 46**;

[0074] **FIG. 48** is a schematic perspective view for explaining another variation of the side seal;

[0075] **FIG. 49** is an enlarged cross-sectional view of the seal lip portion of the side seal shown in **FIG. 48**;

[0076] **FIG. 50** is a schematic perspective view for explaining another variation of the side seal;

[0077] **FIG. 51** is an enlarged cross-sectional view of the seal lip portion of the side seal shown in **FIG. 50**;

[0078] **FIG. 52** is an overall perspective view of another conventional side seal; and

[0079] **FIGS. 53A and 53B** are enlarged cross-sectional views of two types of the seal lip portion of the side seal shown in **FIG. 52**.

DETAILED DESCRIPTION OF THE PREFERRED EMBODIMENTS

[0080] Detailed explanations will be made below for the material of the lubricant-containing member of the present invention.

[0081] In the case of a member made of rubber in which lubricant is contained, for example, it is possible to use polyurethane rubber that has been cured under the condition that it contains grease.

[0082] Polyurethane rubber is a compound formed by the reaction of polyisocyanate and active hydrogen compound. Examples of usable polyisocyanate are: tolylenediisocyanate, hexamethylene diisocyanate, and so forth.

[0083] Examples of usable active hydrogen compounds are: hydrocarbon such as polybutadiene; polyether such as polyoxypropylene; long link active hydrogen compound such as castor oil, polyester and polycarbonate; polyhydroxy compound such as water and ethylene glycol; and short link active hydrogen compound such as aminoalcohol and polyamino compound.

[0084] An example of usable grease is common grease such as mineral oil lithium soap grease.

[0085] Next, the lubricant-containing member in which lubricant is contained in synthetic resin is formed as follows. Lubricant of paraffin hydrocarbon oil such as poly-α-olefin oil, ether oil such as naphthene hydrocarbon oil, mineral oil and dialkyl diphenyl ether oil, and ester oil such as ester of phthalic acid is Bingly mixed with synthetic resin or alternatively mixed with synthetic resin in the form of mixed oil. In this case, the synthetic resin is selected from a group of polyolefin resins having the same chemical structure such as polyethylene, polypropylene, polybutylene and polymethyl pentene. Material obtained in this way is subjected to injection molding so as to mold the lubricant-containing, member. Various addition agents such as an antioxidant, rust preventive agent, antiabrasion agent, deforming agent and extreme pressure agent may be previously added into the lubricant.

[0086] In this case, a ratio of composition of the above lubricant-containing member is as follows. With respect to the total weight, polyolefin resin is 20 to 80% by weight, and lubricant is 80 to 20% by weight. When the polyolefin resin is smaller than 20% by weight, it is impossible to obtain a predetermined level of hardness or mechanical strength. When polyolefin resin exceeds 80% by weight, that is, lubricant is smaller than 20% by weight, a quantity of lubricant to be fed is decreased, so that the abrasion reducing effect of the lip portion of the sealing device is deteriorated. Further, the polyolefin resin is preferably 20 to 50% by weight and the lubricant is preferably 80 to 50% by weight because the supply of the lubricant increases so that it can further raises the abrasion reducing effect of the lip portion of the sealing device.

[0087] Basic structures of the above group of synthetic resins are the same and their average molecular weights are different from each other. Values of the average molecular weights are in a range from 1×10^3 to 5×10^6. Synthetic resin of relatively low molecular weight, the average molecular weight of which is 1×10^3 to 1×10^6, and synthetic resin of extremely high molecular weight, the average molecular weight of which is 1×10^6 to 5×10^6, are singly used, or used being mixed with each other, if necessary.

[0088] In order to enhance the mechanical strength of the lubricant-containing member of the present invention, the following thermoplastic resins and thermosetting resin may be added to the above polyolefin resins.

[0089] Examples of usable thermoplastic resins are: polyamide, polycarbonate, polybutylene terephthalate, polyphenylene sulfide, polyether sulfone, polyether etherketone, polyamideimide, polystyrene, and ABS resin.

[0090] Examples of usable thermosetting resins are: unsaturated polyester resin, urea formaldehyde resin, melamine resin, phenol resin, polyimide resin, and epoxy resin.

[0091] These resins may be singly used. Alternatively, these resins may be used being mixed with each other.

[0092] In order to disperse polyolefin resin and other resins more uniformly, an appropriate compatibilizer may be added, if necessary.

[0093] In order to enhance the mechanical strength, a filler may be added. Examples of usable fillers are: calcium carbonate, magnesium carbonate, inorganic wiskers such as potassium titanate wiskers and aluminum borate wiskers, inorganic fiber such as glass fiber, asbestos and metallic fiber, and cloth woven from these fibers. Concerning inorganic compounds, carbon black, graphite powder, carbon fiber, aramid fiber and polyester fiber may be added.

[0094] In order to prevent the deterioration of polyolefin resin caused by heat, an age resistor such as N,N'-diphenyl-P-phenylenediamine, 2,2'-methylenebis(4-ethyl-6-t-butyl phenol) may be added. In order to prevent the deterioration of polyolefin resin caused by light, an ultraviolet ray absorbing agent such as 2-hydroxy-4-n-octoxy benzophenone and 2-(2'-hydroxy-3'-third-butyl-5'-methyl-phenyl)-5-chlorobenzotriazole may be added.

[0095] In order to maintain the feeding capacity of lubricant, it is preferable that a quantity of addition agent (polyolefin+compound except for oil) is not more than 20% by the weight of the overall material used for molding.

[0096] Next, referring to the accompanying drawings, a first embodiment of the present invention will be explained below.

[0097] As shown in **FIG. 1**, which is a perspective view of the linear guide apparatus of the first embodiment of the invention, the linear guide apparatus includes: a guide rail **1** extending in the axial direction, on the outer surface of which rolling element rolling grooves **3**A, **3**B are formed; and a slider **2** incorporated to the guide rail **1** in such a manner that the slider **2** strides the guide rail **1**.

[0098] The specific structure of the guide rail **1** is described as follows. On the ridge line where an upper surface **1***a* of the guide rail **1** crosses both side surfaces **1***b*, one rolling element rolling groove **3**A is formed, the section of which is a substantial ¼ arc, and the rolling element rolling groove **3**A extends in the axial direction of the guide rail **1**. At an intermediate position on both side surfaces of the guide rail **1**, the other rolling element rolling groove **3**B is formed, the section of which is substantially semicircular. At the bottom of the rolling element rolling groove **3**B, there is formed a run-off-groove **3***a* for a retainer to prevent the rolling elements from falling off when the slider **2** is not incorporated to the guide rail **1**.

[0099] An end cap **2**B is a molding of synthetic resin manufactured by injection molding, and the section of the end cap **2**B is a substantial C-shape. As shown in **FIG. 2**, which is a perspective view showing an assembling condition of the end portion of the slider **2**, on the outside of both end caps **2**B, there are provided a sealing device **8** including a reinforcing plate **10** which is a plate-shaped member, a lubricant-containing member **11**, and a side seal **12** which is a plate-shaped member, wherein they are arranged in the above order from the side of the end cap **2**B and fixed to the end cap **2**B being stacked to each other.

[0100] The reinforcing plate **10** is a C-shaped steel plate, the outer configuration of which is the same as that of the end cap **2**B. In both wing portions **10**A, **10**B of the reinforcing plate **10**, there are formed through-holes **10***a*, **10***b* through which attaching screws penetrate. In a connecting portion **10**C that connects both wing portions **10**A and **10**B, there is formed a through-hole **10***c* through which a grease nipple is attached. In this connection, this reinforcing plate **10** is not contacted with the guide rail **1**.

[0101] The first embodiment of the present invention is shown in FIGS. **34** to **36** in more detail. The sealing device **8** includes a side seal **50** which is composed in such a manner that a sheet of grease-containing polyurethane rubber is made to adhere onto a C-shaped steel plate, the outer shape of which is substantially the same as that of the end cap **2**B, or alternatively a sheet of NBR rubber is made to adhere onto a C-shaped steel plate. An inside face of the C-shaped side seal **50** is formed into a shape so that the side seal **50** can slidably come into contact with an upper face **1***a* and an outer side face **1***b* of the guide rail **1** so as to seal a gap between the slider **2** and the guide rail **1**. However, in order to positively seal the gap between the slider **2** and the guide rail **1**, the size of the inner face of the side seal **50**, which comes into contact with the surface of the guide rail **1**, is determined to be a little smaller than the size of the surface of the guide rail **1** by 0.1 to 0.2 mm.

[0102] As shown in the perspective view of **FIG. 36**, the sealing device **8** further includes a reinforcing plate **52** and a lubricant-containing polymer member **51** which is interposed between the side seal **50** and the reinforcing plate **52** and which is formed into a substantial C-shape which is the same as the outer shape of the end cap **2**B. The inside face of the C-shape of the lubricant-containing polymer member **51** is formed in accordance with the sectional shape of the guide rail **1**, and it is not contacted with the upper face **1***a* and the outer side face **1***b* of the guide rail **1**, or at least a portion of the inside face of the C-shape of the lubricant-containing polymer member **41** is slidably contacted with the upper face **1***a* and the outer side face **1***b* of the guide rail **1**.

[0103] In the lubricant-containing polymer member **51**, there are formed through-holes **51***a*, **51***b* through which

attaching screws penetrate when the lubricant-containing polymer member **51** is attached to the main body **2**A, and there is also formed a through-hole **51***c* through which the grease nipple **7** is attached. Into the through-holes **51***a*, **51***b* and **51***c*, pipe-shaped sleeves **51**A, **51**B and **51**C shown in **FIG. 35** are inserted. The grease nipple **7** penetrates the inside of the sleeve **51**C. In this connection, the length L_2 of these sleeves **51**A, **51**B, **51**C is the same as the thickness L_1 of the lubricant-containing polymer member **51**, or alternatively the length L_2 of these sleeves **51**A, **51**B, **51**C is made to be a little longer than the thickness L_1 of the lubricant-containing polymer member **51** (by about 0.2 mm).

[**0104**] Outer diameters of the sleeves **51**A, **51**B are made to be larger than the diameters of the through-holes **50***a*, **50***b* of the side seal **50** and the diameters of the through-holes **52***a*, **52***b* of the reinforcing plate **52**. Due to the foregoing arrangement, when the lubricant-containing polymer member **51** is interposed between the side seal **50** and the reinforcing plate **52** and fastened by the attaching screws **53***a*, **53***b*, the pushing force is not given to the lubricant-containing polymer member **51**, so that the self-shrinking action of the lubricant-containing polymer member **51** can not be obstructed.

[**0105**] As shown in a perspective view of **FIG. 36**, the side seal **50**, the lubricant-containing polymer member **51** and the reinforcing plate **52** of the sealing device **8** are integrally fixed to the main body **2**A together with the end cap **2**B when the attaching screws **53***a*, **53***b* penetrate the through-holes **50***a*, **50***b*of the side seal **50**, the through-holes **51***a*, **51***b* of the lubricant-containing polymer member **51**, and the through-holes **52***a*, **52***b* of the reinforcing plate **52**. In this connection, reference numeral **50***c* is a through-hole formed on the side seal **50** through which the grease nipple **7** is attached, and reference numeral **52***c* is a through-hole formed on the reinforcing plate **52** through which the grease nipple **7** is attached.

[**0106**] Next, the mode of operation of the first embodiment will be explained as follows.

[**0107**] In the first embodiment, a gap formed between the opposed surfaces of the guide rail **1** and the slider **2** is sealed by the side seal **50**. Therefore, unless the side seal **50** wears away, it is possible to perfectly prevent the entrance of dirt and dust into the gap from the front and the rear of the slider **2**.

[**0108**] When the slider **2** moves on the guide rail **1** fixed to the mount, while the rolling elements B are rolling in the load rolling element rolling path **21** (**22**), they move in the slider moving direction at a speed lower than the moving speed of the slider and make a U-turn at the curved path on one end side. After that, while the rolling elements B are rolling in the rolling element return path **23** (**24**) in the reverse direction, they make a reverse U-turn in the curved path on the other end side. Then, the rolling elements B return to the load rolling element rolling path **21** (**22**). In this way, the rolling elements B circulate in the rolling paths.

[**0109**] When the linear guide apparatus is driven as described above, the lubricant-containing polymer member **51** is also moved while it is contacted or not contacted with the guide rail **1**. Therefore, lubricant gradually oozes from the lubricant-containing polymer member **51**. Since the lubricant-containing polymer member **51** is arranged close to the lip portion of the side seal **50** (the inner surface of the side seal **50** which comes into contact with the guide rail **1**), the lip portion of the side seal **50** is stably lubricated by this oozing lubricant over a long period of time. In an arrangement in which the lubricant-containing polymer member **51** comes into contact with the guide rail **1**, lubricant can be fed to the lip portion of the side seal **50** via the surface of the guide rail **1**. Accordingly, lubricant can be more stably fed to the lip portion in this arrangement.

[**0110**] Due to the foregoing, the abrasion of the lip portion of the side seal **50** can be minimized. Therefore, the sealing property of the side seal **50** can be maintained over a long period of time, and the entrance of dirt and dust into the main body **2**A can be prevented. As a result, the life of the linear guide apparatus can be prolonged.

[**0111**] Further, the lubricant that has oozed from the lubricant-containing polymer member **51** is automatically fed to the rolling elements B, which are rolling in the rolling grooves **3**, **13**, via the rolling grooves **3**, **13**. Due to the self-lubricity described above, it is possible for the apparatus to be smoothly operated over a long period of time. Accordingly, even if lubricant is not fed to the slider **2** from the outside of the apparatus, operation can be smoothly continued over a long period of time under the condition of low resisting torque.

[**0112**] In an arrangement in which the lubricant-containing polymer member **51** comes into contact with the guide rail **1**, as the lubricant oozes from the lubricant-containing polymer member **51**, the lubricant-containing polymer member **51** shrinks by itself. By the shrinking force, the lubricant-containing polymer member **51** closely comes into contact with the surface of the guide rail **1** to be sealed. Therefore, the lubricant-containing polymer member **51** performs both the sealing function and the lubricating function.

[**0113**] When the side seal **50** is made of polyurethane rubber that has been cured under the condition it contains grease, lubricant is fed by the side seal **50** itself. Therefore, the abrasion of the lip portion of the side seal **50** can be more reduced by the lubricant fed by the side seal **50** itself.

[**0114**] Since the lubricant-containing polymer member **51** is interposed between the end cap **2**B and the side seal **50** via the reinforcing plate **52**, the lip portion of the sealing **50** seldom gets rolled up during the reciprocating motion of the slider **2**. Accordingly, it is possible to prevent the leakage of grease from the slider **2**.

[**0115**] When the arrangement of the first embodiment is adopted, the grease nipple attaching hole may be closed with a blank plug. However, when necessary, this hole may be opened at an appropriate time, to that lubricant such as grease can be fed into the slider.

[**0116**] In the linear guide apparatus of the first embodiment, the lubricant-containing polymer member **51** is fixed to the end face of the end cap **2**B under the condition that the lubricant-containing polymer member **51** is interposed between the reinforcing plate **52** and the side seal **50**. However, it should be noted that the present invention is not limited to the first embodiment. For example, in the same manner as that shown in **FIG. 37**, the side seal **50** is directly attached to the end face of the end cap **2**B, and the lubricant-containing polymer member **51** may be fixed to the end face

of the end cap **2**B, to which the side seal **50** is attached, under the condition that the lubricant-containing polymer member **51** is interposed between two pieces of reinforcing plates **52**. Even in the above arrangement, as long as the lubricant-containing polymer member **51** is arranged close to the lip portion of the side seal **50**, the same effect as that of the first embodiment can be provided.

[**0117**] The present inventors made an experiment to check the abrasion of the side seal of the linear guide apparatus of the first embodiment. The result of the experiment will be explained below, referring to the comparative example.

[**0118**] First, the linear guide apparatus of the first embodiment of the present invention, the arrangements of which are described in Examples (1), (2) and (3), were manufactured. As a comparative example, the linear guide apparatus, the arrangement of which is described in Example (4), was manufactured.

EXAMPLE (1)

[**0119**] The side seal **50** was made of NBR rubber. The lubricant-containing polymer member **51** was manufactured as follows. That is, 70% by weight of paraffin mineral oil (FBK RO100 manufactured by Nippon Sekiyu Co.) to be used as lubricant was contained in polyethylene composed of 21% by weight of low molecular weight polyethylene (PZ50U manufactured by Mitsubishi Yuka Co.) and 9% by weight of super high molecular weight polyethylene (MIPELON XM220 manufactured by Mitsui Sekiyu Kagaku Co.). The thus obtained material was subjected to an injection molding machine and plasticized (melted). Then the plasticized material was injected into a predetermined metallic mold and cooled and solidified while it was being pressured. There was provided a gap of 0 to 0.1 mm between the inner face of the lubricant-containing polymer member **51** and the surface of the guide rail **1**. A portion of the inner face of the lubricant-containing polymer member **51**, the area of which was about 70% of the inner face, was contacted with the surface of the guide rail **1**.

EXAMPLE (2)

[**0120**] An arrangement of Example (2) is the same as that of Example (1) except that the side seal **40** was made of grease-containing polyurethane rubber.

[**0121**] The grease-containing polyurethane rubber was manufactured as follows. Mixture (CORONATE T-6 manufactured by Nippon Polyurethane Kogyo Co.) to be used as polyisocyanate in which 2,4-tolylenediisocyanate and 2,6-tolylenediisocyanate were mixed by a mixing ratio 65:35, was reacted with polyesterpolyol (NIPPOLLAN 4032 manufactured by Nippon Polyurethane Kogyo Co.) to be used as active hydrogen compound, so that compound was formed as a result of reaction. Polyisocyanate, active hydrogen compound and grease were mixed with each other so that the thus formed compound could be mixed with mineral oil lithium soap grease (Alvania Grease No. 2 manufactured by Showa Shell Sekiyu K.K.) to be used as grease, by a mixing ratio of 1:1. The thus obtained mixture was heated in an appropriate metallic mold and cured so that it was integrated into one body.

EXAMPLE (3)

[**0122**] The same side seal **50** and lubricant-containing polymer member **51** as those of Example (1) were used. However, the lubricant-containing polymer member **51** was not contacted with the guide rail **1**, wherein a gap 0.2 mm to 0.3 mm was formed between the inner face of the lubricant-containing polymer member **51** and the outer surface of the guide rail **1**. In this connection, concerning a linear guide apparatus in which the side seal **50** was directly attached to the end face of the end cap **2**B and in which the lubricant-containing polymer member **51** interposed between two reinforcing plates **52** was fixed to the end face of the cap **2**B to which the side seal **50** was attached, the following measurement was conducted under the same condition as that of Example (3). As a result of the measurement, the same result was obtained.

EXAMPLE (4)

[**0123**] The side seal **50** was made of NBR rubber, and the lubricant-containing polymer member **51** was not used.

[**0124**] The apparatus described in Examples (1) to (4) were operated in such a manner that the respective linear guide apparatus were made to run by 5000 km, and then quantities of abrasion were measured. By the measurement, the results shown on Table 1 were obtained. In this connection, although the side seals **50** were attached to both end portions of each linear guide apparatus, a quantity of abrasion of one side seal **50** was measured.

TABLE 1

Linear Guide Apparatus	Quantity of Abrasion (g/piece)
Example (1)	0.007
Example (2)	0.002
Example (3)	0.01
Comparative Example (4)	0.20

[**0125**] As can be seen in the result of the experiment, according to Examples (1), (2) and (3) of the present invention, a quantity of abrasion of the side seal **50** can be remarkably reduced, and the sealing property can be maintained over a long period of time.

[**0126**] Further, the present inventors made another experiment to check an endurance of the linear guide apparatus operating in an environment of being filled with wood cutting chips. In the endurance experiment, the linear guide apparatus of the first embodiment is filled up with Alvania Grease No. 2 mentioned above. The endurance experiment was carried out in the environment of the wood cutting chips piled up so that the linear guide apparatus was entirely covered with the wood cutting chips. The result of the endurance experiment will be explained below, referring to the comparative example.

TABLE 2

Linear Guide Apparatus	Relative Running Life	Composition of lubricant-containing polymer member (% by weight)	Seal
Comparative Example (4)	1.0	none	NBR rubber
Example (1)	2.5	LPE: 21, HPE: 9, LUB: 70	NBR rubber
Example (A)	2.3	LPE: 41, HPE: 9, LUB: 50	NBR rubber
Example (B)	1.7	LPE: 61, HPE: 9, LUB: 30	NBR rubber

TABLE 2-continued

Linear Guide Apparatus	Relative Running Life	Composition of lubricant-containing polymer member (% by weight)	Seal
Comparative Example (C)	1.1	LPE: 81, HPE: 9, LUB: 10	NBR rubber
Comparative Example (D)	0.9	LPE: 21, HPE: 9, LUB: 70	none

[0127] In Table 2, Example (1) and Comparative Example (4) are the same as examples shown in Table 1. Examples (A) and (B) as well as Comparative Examples (C) and (D) were added for the endurance experiment. The relative running life was represented by a ratio that the running life of Comparative Example (4) was taken as 1.0. Comparative Example and (D) used is a reinforcing plate with no seal. In the column of Table 2 regarding the composition of the lubricant-containing polymer member, "LPE" indicates low molecular weight polyethylene (PZ50U manufactured by Mitsubishi Yuka Co.); "HPE" indicates super high molecular weight polyethylene (MIPELON XM220 manufactured by Mitsui Sekiyu Kagaku Co.); and "LUB" indicates paraffin mineral oil (FBK RO100 manufactured by Nippon Sekiyu Co.) to be used as lubricant.

[0128] As can be seen in the result of the endurance experiment, when a quantity of lubricant is **50** to 80% by weight, the running life extends remarkably. In contrast, when a quantity of lubricant is less than 30% by weight, the effect of extending the running life is small. Particularly, when a quantity of lubricant is 10% by weight less than 20% by weight, the effect of extending the running life is not almost developed.

[0129] Further, if the NBR rubber is not attached in the outside of the lubricant-containing polymer member, the lubricant-containing polymer member has a manufacturing limit of about 0 to 0.1 mm as a gap relative to the guide rail. Accordingly, since the sealing property is deteriorated, the wood cutting chips are prone to enter to the interior of the linear guide apparatus, even compared with an example of only a rubber seal attached to the end cap. Therefore, the running life of the linear guide apparatus with no NBR rubber is made short.

Second Embodiment

[0130] Next, the second embodiment of the present invention is shown in FIGS. **1** to **8**B. A shape of the side seal of the apparatus of the second embodiment is different from the shape of the side seal of the apparatus of the first embodiment, which is a main different point. The side seal **12** of the second embodiment includes: a C-shaped steel plate, the shape of which is the same as the shape of the end cap **2**B; and a piece of grease-containing polyurethane rubber, the shape of which is similar to the shape of the C-shaped steel plate, wherein the piece of grease-containing polyurethane rubber is integrally attached to an outer surface of the C-shaped steel plate.

[0131] There is provided a lip portion **13** of the side seal **12** which comes into contact with the guide rail **1**. An inside face of the lip portion **13** of the side seal **12** coming into contact with the guide rail **1** is formed into a shape so that the side seal **12** can slidably come into contact with an upper face la and an outer side face **1***b* of the guide rail **1** and so that a gap between the slider **2** and the guide rail **1** can be sealed. More specifically, the lip portion **13** of the side seal **12** is formed into a shape so that the lip portion **13** can be slidably contacted with the rolling element rolling grooves **3**A, **3**B and the run-off groove **3***a*. In this connection, in both wing portions **12**A, **12**B of the side seal **12**, there are formed through-holes **12***a*, **12***b* through which attaching screws penetrate. In a connecting portion **12**C that connects both wing portions **12**A and **12**B, there is formed a through-hole **12***c*through which a grease nipple is attached.

[0132] There is provided a lubricant-containing member **11** which is interposed between the side seal **12** and the reinforcing plate **10**. This lubricant-containing member **11** is formed into a substantial C-shape in accordance with the outer shape of the end cap **2**B. The inside face of the C-shaped lubricant-containing member **11** is not tapered but flat. Accordingly, in the same manner as that of the inner face of the lip portion **13**, the inside face of the C-shaped lubricant-containing member **11** can be contacted with an upper face **1***a* of the guide rail **1** and an outer side face **1***b* including the rolling element rolling grooves **3**A, **3**B in accordance with the sectional shape of the guide rail **1**.

[0133] As shown in **FIG. 3A** which is a front view and **FIG. 3B** which is a side view of the lubricant-containing member **11**, in both wing portions **11**A and **11**B of the lubricant-containing member **11**, there are formed through-holes **11***a*, **11***b* through which the attaching screws penetrate. In a connecting portion **11**C to connect both wing portions **11**A and **11**B, there is formed a through-hole **11***c* through which the grease nipple is attached. The through-holes **11***a*, **11***b* are respectively open to the outside of the wing portions **11**A, **11**B. The through-hole **11***c* is open to the upper face side of the connecting portion **11**C.

[0134] Dimensions of the recessed portion of this lubricant-containing member **11** are determined so that the inner face of the recessed portion can be slidably contacted with the upper face **1***a* of the guide rail **1** and the outside face **1***b* including the rolling element rolling grooves **3**A, **3**B. In portions on the inner face of the recessed portion of the lubricant-containing member **11** opposed to the rolling element rolling grooves **3**A, **3**B and the run-off groove **3***a* of the guide rail **1**, there are provided protrusions **11***f*, **11***g*, **11***d* and **11***e* which are formed so that they can slide on the inner faces of the grooves **3**A, **3**B and **3***a*. Further, The shape of an inner bottom face **11***h* of the lubricant-containing member **11**, which slidably comes into contact with the upper face **1***a* of the guide rail **1**, is formed into an arc, the radius of curvature of which is R, so that the center of the inner bottom face protrudes from both end portions close to the wing portions **11**A, **11**B when the lubricant-containing member **11** is not given a force from the outside.

[0135] Ring-shaped members **15**A, **15**B are inserted into the respective through-holes **11***a*, **11***b* formed in both wing portions **11**A, **11**B of the lubricant-containing member **11**. As shown in **FIG. 4A** which is a front view of the ring-shaped members **15**A, **15**B and also as shown in **FIG. 4B** which is a side view, the ring-shaped members **15**A, **15**B are short cylindrical members, and the outer diameters of the ring-shaped members **15**A, **15**B are appropriate to insert them into the through-holes **11***a*, **11***b* easily.

[0136] A ring-shaped member (or a solid cylindrical member) **16** is inserted into the through-hole **11***c* formed in the connecting section **11**C of the lubricant-containing member **11**. As shown in **FIG. 5A** which is a front view of the ring-shaped member **16** and also shown in **FIG. 5B** which is a side view, this ring-shaped member **16** is a short cylindrical member. However, the outer diameter D_{AR} of the ring-shaped member **16** is larger than the inner diameter D_A of the through-hole **11***c*. That is, when the ring-shaped member **16** is inserted into the through-hole **11***c*, the through-hole **11***c* is expanded.

[0137] Further, the length V of the ring-shaped members **15**A, **15**B is a little longer than the thickness W of the lubricant-containing member **11**, for example, the length V of the ring-shaped members **15**A, **15**B is longer than the thickness W of the lubricant-containing member **11** by about 0.2 mm. That is, when the ring-shaped members **15**A, **15**B and **16** are respectively inserted into the through-holes **11***a* to **11***c*, as shown in **FIG. 6**, end portions of the ring-shaped members **15**A, **15**B and **16** protrude from the front side or the reverse side of the lubricant-containing member **11**.

[0138] The reinforcing plate **10**, the lubricant-containing member **11** and the side seal **12** are integrally fixed to the main body **2**A together with the end cap **2**B when the attaching screws **17**A, **17**B, which penetrate the through-holes **2***a*, **2***b* of the end cap **2**B and screw to the main body **2**A, penetrate the through-holes **12***a*, **12***b* of the side seal **12**, the ring-shaped members **15**A, **15**B inside the through-holes **11***a*, **11***b* of the lubricant-containing member **11**, and the through-holes **10***a*, **10***b* of the reinforcing plate **10**.

[0139] Next, the mode of operation of the second embodiment will be explained below.

[0140] When the linear guide apparatus is driven, the lubricant-containing member **11** is moved coming into contact with the guide rail **1**, and frictional heat is generated. Being influenced by the frictional heat, lubricant gradually oozes from the lubricant-containing member **11**. After the lubricant has oozed out, it is automatically fed to the rolling elements, which are rolling in the rolling element rolling grooves **3**A, **3**B, via the rolling element rolling grooves **3**A, **3**B. Due to the self-lubricity described above, it is possible for the apparatus to be smoothly operated over a long period of time. Accordingly, even if lubricant is not fed to the slider **2** from the outside of the apparatus, operation can be smoothly continued over a long period of time under the condition of low resisting torque.

[0141] As described above, the shape of the inner face of the recessed portion of the lubricant-containing member **11** is matched with the transverse cross-sectional shape of the guide rail **1**. Therefore, as shown in **FIG. 7**, the lubricant-containing member **11** can be closely contacted with the upper face **1***a* and the side face **1***b* of the guide rail **1**. As the lubricant oozes from the lubricant-containing member **11**, the lubricant-containing polymer member **11** shrinks by itself. By the shrinking force, the lubricant-containing polymer member **11** closely comes into contact with the surface of the guide rail **1** to be sealed at all times. Therefore, the lubricant-containing member **11** performs both the sealing function and the lubricating function.

[0142] In the second embodiment, since the side seal **12** is used as a plate member on the outside of the lubricant-containing member **11**, the sealing property can be more enhanced.

[0143] Especially, in the second embodiment, since an upper face side of the through-hole **11***c* formed in the connecting section **11**C of the lubricant-containing member **11** is cut away, the upper face side of the through-hole **11***c* is open. Accordingly, as shown in **FIG. 8A**, the wing portions **11**A and **11**B can be easily expanded in the transverse direction. Therefore, the lubricant-containing member **11** can be easily attached in the assembling process even if it is arranged striding the guide rail **1**.

[0144] Into the through-hole **11***c* of the lubricant-containing member **11**, the ring-shaped member **16**, the outer diameter of which is larger than the inner diameter of the through-hole **11***c*, is inserted to be used as a pushing means. Accordingly, when the lubricant-containing member **11** strides the guide rail **1** as shown in **FIG. 8B**, the ring-shaped member **16** expands the through-hole **11***c* in the transverse direction. Therefore, a pushing force to push the wing portions **11**A, **11**B against the guide rail **1** is generated by this pushing means. Due to the foregoing, even if some manufacturing errors are caused in the size of the lubricant-containing member **11**, or even if the lubricant-containing member **11** wears away a little, it is possible to make the lubricant-containing member **11** closely come into contact with the surface of the guide rail **1** to be sealed at all times. In this case, due to the structure of the through-hole **11***c*, the upper face side of which is open, a force to expand the through-hole **11***c* by the ring-shaped member **16** is effectively converted into a pushing force to push the wing portions **11**A, **11**B against the guide rail **1**. Therefore, this structure of the through-hole **11***c* is very advantageous.

[0145] The length V of the ring-shaped members **15**A, **15**B is a little longer than the thickness W of the lubricant-containing member **11**. Therefore, end portions of the ring-shaped members **15**A, **15***b* and **16** are protruded from the front side or the reverse side of the lubricant-containing member **11**. Since the attaching means for attaching the lubricant-containing member **11** is composed in the above manner, although the lubricant-containing member **11** is interposed between the reinforcing plate **10** and the side seal **12**, the friction can be reduced. Due to the foregoing arrangement, the lubricant-containing member **11** is smoothly deformed by the self-shrinkage and the aforementioned pushing force in a direction perpendicular to the axial direction of the guide rail **1**. Accordingly, it is possible to make the lubricant-containing member **11** closely come into contact with the guide rail **1** at all times.

[0146] As described above, the inner bottom surface **11***h* of the recessed portion of the lubricant-containing member **11** is formed into an arc. Therefore, when the wing portions **11**A, **11**B of the lubricant-containing member **11** are deformed being pushed against the guide rail **1** by the self-shrinkage or the pushing force, the inner bottom surface **11***h* is put into a substantially horizontal condition, and the inner bottom surface **11***h* stably comes into contact with the upper face **1***a* of the guide rail **1**.

[0147] Since the lubricant-containing member **11** is interposed between the reinforcing plate **10** and the side seal **12**, it is easy to increase the size of the lubricant-containing member **11** so that a sufficient quantity of lubricant can be contained in the member to continue a smooth rolling motion of the rolling elements over a long period of time. Further, since the lubricant-containing member **11** is not

made to adhere onto a steel plate or other members, it is possible to reduce the cost of the lubricant-containing member **11** which is an article of consumption. Furthermore, it is possible to save time and labor when the lubricant-containing member **11** is replaced.

[**0148**] Since the lubricant-containing member **11** is interposed between the reinforcing plate **10** and the side seal **12**, it is difficult for the lip portion **13**, which is a portion of the side seal **12** to be contacted with the guide rail **1**, to get rolled up when the slider **2** is reciprocated. Accordingly, the leakage of grease from the slider **2** can be reduced.

[**0149**] After the lubricant has oozed from the lubricant-containing member **11**, it is fed to the lip portion **13** of the side seal **12** which comes into contact with the guide rail **1**. Therefore, the lubricant that has oozed from the lubricant-containing member **11** is useful for the reduction of abrasion of the lip portion **13**. Especially, in the second embodiment, the lip portion **13** is made of polyurethane rubber that has been cured under the condition that grease is contained in it. Accordingly, the lubricant is fed by the lip portion **13** itself, and the abrasion of the lip portion **13** can be more reduced. Since the abrasion of the lip portion **13** can be minimized, the sealing property of the lip portion **13** can be maintained over a long period of time, and further it is possible to prevent the intrusion of foreign objects into the main body **2**A. Accordingly, the life of the linear guide apparatus can be prolonged.

[**0150**] According to the arrangement of the second embodiment, lubricant is fed from the lubricant-containing member **11** to the rolling elements at all times. Therefore, the grease nipple attaching hole may be closed with a blank plug, however, this grease nipple attaching hole may be opened when necessary so as to feed lubricant into the slider.

[**0151**] In the second embodiment, the side seal **12** corresponds to the plate member, the reinforcing plate **10** corresponds to another plate member, and the ring-shaped member **16** corresponds to the pushing means.

Third Embodiment

[**0152**] **FIGS. 9 and 10** are views showing the third embodiment of the present invention. In this connection, like reference characters are used to indicate like parts in the views showing the second embodiment and the third one, and the overlapping explanations are omitted here.

[**0153**] The arrangement of the linear guide apparatus of the third embodiment is the same as that of the first embodiment described above, except that the shape of the lubricant-containing member **11** is changed.

[**0154**] Specifically, as shown in **FIG. 9** which is a front view of the lubricant-containing member **11**, the shape of the lubricant-containing member **11** is composed as follows. In the wing portions **11**A, **11**B, there are formed cutout portions **20**A, **20**B which continue to the through-holes **11***a*, **11***b* through which the attaching screws penetrate, and the outside and the front end side of the wing portions **11**A, **11**B are opened by the cutout portions **20**A, **20**B, and the inner diameters of the ring-shaped members **15**A, **15**B, which are inserted into the through-holes **11***a*, **11***b*, are made to be larger than the outer diameters of the attaching screws **17**A, **17**B. Other arrangements are the same as those of the second embodiment.

[**0155**] According to the above arrangement, as shown in **FIG. 10** which is a front view of the lubricant-containing member **11** arranged in a condition of striding the guide rail **1**, when the attaching screws **17**A, **17**B are loosened, the ring-shaped members **15**A, **15**B can be moved outside. Therefore, only the lubricant-containing member **11** can be removed from the linear guide apparatus being pulled upward. In this way, the lubricant-containing member **11** can be removed from the linear guide apparatus. A new lubricant-containing member **11** can be inserted into the linear guide apparatus from the upside without removing the side seals and others from the main body **2**A. The lubricant-containing member **11** can be incorporated to the main body in such a manner that the ring-shaped members **15**A, **15**B are pushed into the through-holes **11***a*, **11***b*, and then the attaching screws **17**A, **17**B are fastened.

[**0156**] According to the arrangement of the third embodiment of the present invention, the lubricant-containing member **11** from which the lubricant has completely oozed can be easily replaced with a new lubricant-containing member **11**, which is called a cassette system. Therefore, it is possible to feed the lubricant without requiring much time and labor while the operator's hands are maintained clean.

[**0157**] Other point of the third embodiment are the same as those of the first embodiment described before.

Fourth Embodiment

[**0158**] FIGS. **11** to **17** are views showing the fourth embodiment of the present invention. In this connection, like reference characters are used to indicate like parts in the views showing the first to third embodiments described before, and the overlapping explanations are omitted here.

[**0159**] In the fourth embodiment, an arrangement to generate a pushing force to push the wing portions **11**A, **11**B of the lubricant-containing member **11** against the guide rail **1** is different from that of the first and second embodiments described before.

[**0160**] The specific arrangement is shown in **FIGS. 11, 12A** and **12**B. **FIG. 11** is a perspective view showing an assembling condition of the end portion of the slider **2**, **FIG. 12A** is a front view of the lubricant-containing member **11**, and **FIG. 12B** is a side view of the lubricant-containing member **11**. As shown in these drawings, the lubricant-containing member **11** is composed as follows. The through-hole **11***c* of the lubricant-containing member **11** is omitted. On the surface of the lubricant-containing member **11** on the front side of the side seal **12**, there is formed a continuous C-shaped groove **30** which surrounds the recessed portion of the lubricant-containing member **11**. In the groove **30**, there is provided an elastic body **31** which acts as the pushing means shown in **FIG. 13A** which is a front view, and **FIG. 13B** which is a bottom view.

[**0161**] The elastic body **31** is an elastically deformable member made of steel, synthetic resin or hard rubber. The shape of the elastic body **31** is a substantial C-shape in accordance with the shape of the groove **30**. Under the condition that the elastic body **31** is not given a force from the outside, the width of the opening side of the C-shape is a little reduced.

[**0162**] Other points of the fourth embodiment are the same as those of the first and second embodiments described

before. However, according to the fourth embodiment, the through-hole **11***c* of the lubricant-containing member **11** is omitted, and the through-hole **10***c* of the reinforcing plate **10** and the through-hole **12***c* of the side seal **12** are also omitted, so that the grease nipple is not provided. However, like the second embodiment described before, the through-holes **10***c*, **11***c*, **12***c*may be formed, and the grease nipple attaching hole is closed with a blank plug in a normal operating condition and opened when necessary so as to feed lubricant such as grease into the slider.

[**0163**] According to the arrangement of the fourth embodiment, as shown in **FIG. 14**, a pushing force to push the wing portions **11**A, **11**B of the lubricant-containing member **11** against the guide rail **1** is generated by an elastic force of the elastic body **31** provided in the groove **30**, and as shown in **FIG. 15**, when the lubricant-containing member **11** is attached to the apparatus, the wing portions **11**A, **11**B can be expanded in the transverse direction. Accordingly, as shown in **FIG. 16**, it is possible to make the lubricant-containing member **11** closely come into contact with the guide rail **1** in a stable condition. Since the shape of the elastic body **31** is determined in such a manner that an interval of the front end portions is reduced when no load is given, even if the lubricant-containing member **11** wears away a little, the inner surfaces of the wing portions **11**A, **11**B can be more positively pressed against the guide rail **1**. As shown in **FIG. 17**, since the ring-shaped members **15**A, **15**B protrude from the surface of the lubricant-containing member **11** in the same manner as that of the first embodiment described before, the lubricant-containing member **11** can be smoothly deformed.

[**0164**] In the above explanations, it can be seen that the same effect as that of the first and second embodiments is provided by the fourth embodiment.

[**0165**] Since the elastic body **31** to generate a pushing force is arranged in such a manner that it surrounds the recess of the lubricant-containing member **11** and the end portions of the elastic body **31** are extended to positions close to the front end portions of the wing portions **11**A, **11**B, the pushing force generated by the elastic body can be more positively transmitted to the wing portions **11**A, **11**B.

Fifth Embodiment

[**0166**] **FIGS. 18A and 18B** are views showing the fifth embodiment of the present invention. **FIG. 18A** is a front view of the lubricant-containing member **11**. **FIG. 18B** is a cross-sectional view taken on line XVIII-XVIII in **FIG. 18A**.

[**0167**] An arrangement of the fifth embodiment is essentially the same as that of the fourth embodiment described above. A different point is that a substantially rectangular cutout portion **11**D, which is open upward, is formed on an upper surface of the connecting section **11**C of the lubricant-containing member **11**.

[**0168**] When the above cutout portion **11**D is formed, the rigidity of the connecting section **11**C is lowered. Therefore, an elastic force generated by the elastic body **31** is effectively converted into a pushing force by which the wing portions **11**A, **11**B can be pressed against the guide rail **1**. Accordingly, it becomes possible to make the lubricant-containing member **11** more positively come into contact with the guide rail **1**. Other points are the same as those of the fourth embodiment described before.

Sixth Embodiment

[**0169**] **FIGS. 19A** to **22** are views showing the sixth embodiment of the present invention. In this connection, like reference characters are used to indicate like parts, and the overlapping explanations are omitted here.

[**0170**] In the sixth embodiment, as shown in **FIG. 19A** which is a front view of the lubricant-containing member **11** and **FIG. 19B** which is a side view, there is formed a continuous outer circumferential groove **33** on the outer surfaces of the wing portions **11**A, **11**B and also on the upper surface of the connecting section **11**C. In this connection, at both ends of the outer circumferential groove **33**, there are formed recesses **33***a* which enter the inside of both wing portions **11**A, **11**B.

[**0171**] An elastic body **34** shown in **FIG. 20**, which acts as the pushing means, is engaged with the outer circumferential groove **33**. An arrangement of the elastic body **34** is the same as that of the elastic body **31** shown in the fourth embodiment, except that the size of the elastic body **34** is increased and protrusions **34***a* to be engaged with the recesses **33***a* are formed at the front end portions.

[**0172**] In the above arrangement, as shown in **FIG. 21A**, the elastic body **34** pushes the wing portions **11**A, **11**B to the guide rail **1**. Therefore, the lubricant-containing member **11** can be made to stably come into close contact with the guide rail **1**. Since the ring-shaped members **15**A, **15**B protrude from the surface of the lubricant-containing member **11** as shown in **FIG. 21B** in the same manner as that of the above second embodiment, the lubricant-containing member **11** can be smoothly deformed. Accordingly, the same effect as that of the fourth embodiment can be provided by the sixth embodiment.

[**0173**] According to the arrangement of the sealing device **8** of the sixth embodiment as shown in **FIG. 22**, only the elastic body **34** can be removed without loosening or removing the attaching screws **17**A, **17**B. For this reason, it is possible to attach the elastic body **34** after all the parts have been attached. Therefore, this arrangement can be variously used. For example, when it is unnecessary to press the lubricant-containing member **11** against the guide rail **1**, the elastic body **34** is removed, and only when it becomes necessary to press the lubricant-containing member **11** against the guide rail **1**, the elastic body **34** is attached. Alternatively, when it is required that an intensity of the pushing force of the lubricant-containing member **11** against the guide rail **1** is changed, the elastic body **34** is replaced with another one.

[**0174**] For example, this arrangement can be used as follows. Immediately after the use of a new lubricant-containing member **11** is started, the lubricant-containing member **11** seldom wears away, so that the lubricant-containing member **11** can be made to closely come into contact with the guide rail **1**. In this case, when the elastic body **34** is attached to the lubricant-containing member **11**, too much lubricant oozes from the lubricant-containing member **11**. Therefore, the elastic body **34** is previously removed. When the lubricant-containing member **11** wears away and it becomes difficult to make the lubricant-contain-

ing member **11** closely come into contact with the guide rail **1**, the elastic body **34** is attached so as to make the lubricant-containing member **11** closely come into contact with the guide rail **1**. In the event of progress of abrasion, the elastic body **34** is replaced with a more elastic body. In this way, a quantity of oozing lubricant can be stably maintained at an appropriate value at all times.

[**0175**] In the sixth embodiment, there are formed recesses **33***a*at both ends of the outer circumferential groove **33**, and also there are formed protrusions **34***a* engaging with these recesses **33***a* at both ends of the elastic body **34**. Accordingly, even if the elastic body **34** is set from the outside, there is no possibility that the elastic body **34** easily falls off or slips in a direction in which the elastic body **34** is disconnected from the apparatus.

Seventh Embodiment

[**0176**] **FIG. 23** is a view showing the seventh embodiment of the present invention. **FIG. 23** is a front view of the lubricant-containing member **11**.

[**0177**] An arrangement of the seventh embodiment is essentially the same as that of the fourth embodiment described before. A different point is that a substantially rectangular cutout portion **11**D, which is open upward, is formed on an upper surface of the connecting section **11**C of the lubricant-containing member **11**. Due to the foregoing, the same effect as that of the fifth embodiment can be provided by this embodiment, and other effects are the same as those of the sixth embodiment.

Eighth Embodiment

[**0178**] FIGS. **24** to **26**B are views showing the eighth embodiment of the present invention. In this connection, like reference characters are used to indicate like parts in the views showing each embodiment described before, and the overlapping explanations are omitted here.

[**0179**] In the eighth embodiment, as shown in **FIG. 24** which is a front view of the lubricant-containing member **11**, in the connecting section **11***c* of the lubricant-containing member **11**, there is formed a linear groove **37** extending in the width direction of the lubricant-containing member **11**. Into this groove **37**, an elastic body **38** is set which acts as the pushing means shown in **FIG. 25A** which is a front view and **FIG. 25B** which is a bottom view.

[**0180**] The elastic body **38** is a thin prism-shaped elastic member made of steel, synthetic resin or hard rubber, which is a little curved. As shown in **FIG. 26A** which is a front view and **FIG. 26B** which is a side view, the elastic body **38** is set into the groove **37** while the elastic body **38** is curved in a direction reverse to its curved shape.

[**0181**] Even in this arrangement, the connecting section **11**C of the lubricant-containing member **11** is curved inside by an elastic restoring force of the elastic body **38**. Therefore, a pushing force to push the wing portions **11**A, **11**B against the guide rail **1** is generated. Accordingly, the same effect as that of the second embodiment described before can be provided by the eighth embodiment.

Ninth Embodiment

[**0182**] FIGS. **27** to **29**B are views showing the ninth embodiment of the present invention. In this connection, like reference characters are used to indicate like parts in the views showing the embodiments described before, and the overlapping explanations are omitted here.

[**0183**] In the ninth embodiment, as shown in **FIG. 27** which is a front view of the lubricant-containing member **11**, in the connecting section **11***c* of the lubricant-containing member **11**, there is formed a rectangular through-hole **39** which is long in the transverse direction. In this connection, on the upper side of the lubricant-containing member **11**, there is formed a cutout portion **11**E through which the through-hole **39** communicates with the outside.

[**0184**] As shown in **FIG. 28A** which is a front view and **FIG. 28B** which is a side view, a coil spring **40**, which acts as the pushing means, is accommodated in the through-hole **39** under the condition that its expanding direction is aligned in the transverse direction and it is compressed as shown in **FIG. 29A** which is a front view and **FIG. 29B** which is a partially cutaway side view.

[**0185**] According to this arrangement, the rigidity of the connecting section **11**C in the transverse direction is reduced by the action of the cutout **11**E, and the connecting section **11**C of the lubricant-containing member **11** is expanded in the transverse direction by an elastic restoring force of the coil spring **40**. As a result, a pushing force to push the wing portions **11**A, **11**B to the guide rail **1** is generated. Therefore, the same effect as that of the second embodiment described before can be provided by the ninth embodiment.

Tenth Embodiment

[**0186**] **FIGS. 30A** to **30**B are views showing the tenth embodiment of the present invention. **FIG. 30A** is a front view, and **FIG. 30B** is a partially cutaway side view. In this connection, like reference characters are used to indicate like parts in the views showing the embodiments described before, and the overlapping explanations are omitted here.

[**0187**] The tenth embodiment is arranged as follows. In the wing portions **11**A, **11**B of the lubricant-containing member **11**, there are formed slits **41**A, **41**B extending in the upward and downward direction, and ends of the slits **41**A, **41**B are open to the front end sides of the wing portions **11**A, **11**B. In the intermediate portions of these slits **41**A, **41**B, there are formed rectangular through-holes **42**A, **42**B which are long in the transverse direction. In the through-holes **42**A, **42**B, there are provided coil springs **43**A, **43**B, which act as pushing means, the expanding direction of which is aligned in the transverse direction, wherein the coil springs **43**A, **43**B are set in the through-holes **42**A, **42**B being a little compressed.

[**0188**] According to the above arrangement, the rigidity of the connecting section **11**C in the transverse direction is reduced by the action of the slits **41**A, **41**B, and elastic restoring forces of the coil springs **43**A, **43**B are used as pushing forces to press the wing portions **11**A, **11***b* against the guide rail **1**. Accordingly, the same effect as that of the second embodiment can be provided by the tenth embodiment.

Eleventh Embodiment

[**0189**] **FIGS. 31A** to **31**D are views showing the eleventh embodiment of the present invention. **FIGS. 31A** to **31**D are perspective views showing variations of the ring-shaped

member **16** to be set in the through-hole **11***c* of the lubricant-containing member **11**. In this connection, the arrangement of the eleventh embodiment is the same as that of the second embodiment except for the structure of the ring-shaped member **16**.

[**0190**] In the eleventh embodiment, the ring-shaped member **16**, which acts as the pushing means, is made of deformable material such as metal or high polymer (plastics and rubber). On the outer circumferential surface of the ring-shaped member **16**, there are formed slits **16***a* extending in the axial direction. In the same manner as that of each embodiment described before, the inner diameter of the through-hole **11***c* is made to be a little smaller than the outer diameter of the ring-shaped member **16**, so that the ring-shaped member **16** can be inserted into the through-hole **11***c* under the condition that the diameter of the ring-shaped member **16** is a little reduced. Since the slits **16***a* are formed in the eleventh embodiment, the ring-shaped member **16** can be more smoothly, elastically deformed in the direction in which the diameter of the ring-shaped member **16** is reduced. Due to the foregoing, an expanding action by which the through-hole **11***c* is expanded can be stably provided by the ring-shaped member **16** over a long period of time. Accordingly, the wing portions **11**A, **11**B can be stably pressed against the guide rail **1** over a long period of time, and the same effect as that of the second embodiment can be more positively provided.

[**0191**] In this connection, the diameter expanding action of the ring-shaped member **16** engaged with the through-hole **11***c* is determined by the size and number of the slits **16***a* formed in the ring-shaped member **16** and also determined by the wall thickness and material of the ring-shaped member **16**. A pushing force to push the wing portions **11**A, **11**B against the guide rail **1** and a permissible abrasion loss of the lubricant-containing member **11** are determined by the deformation characteristic of the ring-shaped member **16**. Accordingly, it is necessary to appropriately determine the above factors by the size and specification of the linear guide apparatus to be used and the rigidity of the lubricant-containing member **11**. Consequently, the number of the slits **16***a* is not limited to the specific embodiments shown in **FIGS. 31A** to **31**D, but it can be determined arbitrarily.

[**0192**] **FIGS. 32A** to **32**C are views showing variations of the eleventh embodiment. In the variations, instead of the ring-shaped member **16**, a solid columnar member **16**A is used as a pushing means, which is engaged in the through-hole **11***c*, wherein slits **16***b* are formed in the columnar member **16**A so that the diameter can be expanded and contracted. Even when this columnar member **16**A is used, the same effect as that of the ring-shaped members **16** shown in **FIGS. 31A** to **31**D can be provided. In this connection, the diameter expanding action of this columnar member **16** is determined by the material and the size and number of the slits **16***b*. Accordingly, in the same manner as that of the ring-shaped member **16**, it is necessary to appropriately determine the above factors by the size and specification of the linear guide apparatus to be used and the rigidity of the lubricant-containing member **11**. Consequently, the number of the slits **16***b* is not limited to the specific embodiments shown in **FIGS. 32A** to **32**C, but it can be determined arbitrarily.

Twelfth Embodiment

[**0193**] **FIG. 33** is a view showing the twelfth embodiment of the present invention. **FIG. 33** is a front view of the lubricant-containing member **11** when it is arranged striding the guide rail **1**. In this connection, like reference characters are used to indicate like parts in the views showing the embodiments described before, and the overlapping explanations are omitted here.

[**0194**] In the twelfth embodiment, there are formed two through-holes **11***c* at positions in the connecting sections **11**C of the lubricant-containing member **11** close to both wing portions **11**A, **11**B. The ring-shaped member **16** having the slits **16***a* shown in the eleventh embodiment is inserted into each through-hole **11***c*.

[**0195**] In the above arrangement in which a plurality of through-holes **11***c* and ring-shaped members **16** are provided, the connecting section **11**C of the lubricant-containing member **11** is curved by a force to expand the diameter of each ring-shaped member **16**. Therefore, a pushing force to push the wing portions **11**A, **11**B against the guide rail **1** is generated. Accordingly, the same effect as that of the second embodiment can be provided. In this connection, the number of the through-holes **11***c* may be not less than **3**, and instead of the ring-shaped member **16**, the columnar members **16**A shown in **FIG. 32** may be inserted into a plurality of through-holes **11***c*.

[**0196**] In the twelfth embodiment, explanations are made for a case in which the lip portion **13** is formed from rubber containing lubricant. However, since lubricant is fed from the lubricant-containing member **11** to the lip portion **13**, the lip portion **13** may be made of NBR (acrylonitrile butadiene rubber) not containing lubricant.

[**0197**] In each embodiment described before, the reinforcing plate **10** may be omitted, and the lubricant-containing member **11** may be interposed between the end cap **2**B and side seal **12**. Since the lubricant-containing member **11** substantially functions as a sealing device, instead of the side seal **12**, a steel plate like the reinforcing plate **10** may be arranged as a reinforcing plate or a protector. Under certain circumstances, instead of the reinforcing plate **10**, the side seal **12** may be interposed between the lubricant-containing member **11** and the end cap **2**B.

[**0198**] In each embodiment described before, the length V of the ring-shaped members **15**A, **15**B, **16** is determined to be longer than the thickness W of the lubricant-containing member **11**. However, the length V may be the same as the thickness W, or the length V may be a little shorter the thickness W. The essential point to determine the length V and the thickness W is described as follows. A relation between the length V and the thickness W must be maintained so that a deformation of the lubricant-containing member **11** in a direction perpendicular to the axial direction of the guide rail **1** can not be obstructed when the lubricant-containing member **11** is fixed by fastening the attaching screws **17**A, **17**B.

[**0199**] The linear guide apparatus to which the present invention is applied is not limited to the apparatus of the embodiments described above. For example, the present invention can be applied to a linear guide apparatus in which two or more rolling element rolling grooves are formed on one side, or the rolling elements are not balls but rollers.

[0200] As explained above, according to the invention, lubricant can be very stably fed to the lip portion, so that the abrasion of the lip portion can be minimized, and the sealing property of the sealing device can be maintained at a high level over a long period of time. Therefore, the intrusion of foreign object into the linear guide apparatus can be suppressed and the life of the linear guide apparatus can be prolonged.

[0201] Further, the lubricant gradually oozing from the lubricant-containing member can be fed to the rolling elements via the guide rail. Accordingly, the rolling elements can be smoothly rolled. In this case, when the side seal is used as a plate member, the abrasion of a contact surface of the side seal with the guide rail can be reduced by the action of lubricant fed from the lubricant-containing member. Therefore, the intrusion of foreign objects into the rolling element rolling groove can be prevented, and the life of the linear guide apparatus can be more prolonged.

[0202] Moreover, it is possible to make the lubricant-containing member come into contact with the guide rail at all times. Therefore, the lubricant that has oozed from the lubricant-containing member can be stably fed to the rolling elements via the guide rail. As a result, the rolling elements can be more smoothly rolled.

[0203] Still further, the lubricant-containing member can be made to stably come into contact with the guide rail. Therefore, the lubricant can be more stably fed to the rolling elements via the guide rail.

Thirteenth Embodiment

[0204] The thirteenth embodiment of the present invention is shown in FIGS. **39** to **42**.

[0205] The under seal **21** is composed of an under seal reinforcing plate **22** and an under seal body **23** made of lubricant-containing rubber or synthetic resin which adheres onto the under seal reinforcing plate **22**. The under seal reinforcing plate **22** is made of a rectangular steel plate, the length of which is substantially the same as that of the slider **2**, and the width of which is a little larger than the width of the lower end face **24** of the slider body **2**A. An inner side edge of the under seal reinforcing plate **22** protrudes a little from an end of the lower end face **24** of the slider body **2**A. The seal body **23** is made of lubricant-containing synthetic rubber or synthetic resin. The seal body **23** is made to adhere onto the under seal reinforcing plate **22**, which is a rectangular plate, by adhesion or baking while the seal body **23** is let to come near the inner edge side of the under seal reinforcing plate **22**. At an end edge of the seal body **23**, there is provided a seal lip L_1 which comes into contact with the side **1***b* of the guide rail **1**. In this way, the seal lip portion is composed. **5** As shown in **FIG. 42**, in a portion of the seal lip L_1 which comes into contact with the side surface **1***b* of the guide rail **1**, there are provided three cutout portions **25** extending in the longitudinal direction of the seal body **23**, wherein these cutout portions **25** are arranged in the thickness direction of the seal body **23**. Due to the foregoing arrangement, the seal lip L_1 is divided into four pieces.

[0206] As shown in **FIG. 39**, the side seal **61** is composed in such a manner that a lubricant-containing seal body **63** made of the same material as that of the seal body **23** is made to adhere by adhesion or baking onto an outer surface of the side seal reinforcing plate **62** made of a thin C-shaped steel plate, the shape of which is substantially the same as that of the end cap **2**B. In the C-shaped seal body **63**, on both side surfaces opposed to each other, there are provided groove sliding protrusions **64***a*, **64***b* which are respectively engaged with ball rolling grooves **3** of the guide rail **1**, the number of which is two with respect to one side of the guide rail **1**. The seal lip L_2 is formed on an inner edge of the seal body **63** which comes into contact with the outer surface of the guide rail **1**. On the surface of this side seal **61**, there is formed one grease nipple attaching hole **66** in conjunction with a plurality of attaching holes **65** through which the side seal **61** is attached to the end cap **2**B.

[0207] In a portion of the seal lip L_2 which comes into contact with the ball rolling groove **3**, that is, in a portion of the groove sliding protrusion **64**, as shown in **FIGS. 40 and 41**, there are formed three cutout portions **66** in the thickness direction of the seal body **63**. By the above cutout portions **66**, the seal lip L_2 is divided into 4 pieces.

[0208] Next, the action will be explained as follows.

[0209] The under seal **21** is attached as follows.

[0210] The slider **2** is previously assembled by attaching the end caps **2**B to both end portions of the slider body **2**A. The under seal **21** is fixed in such a manner that both end portions of the under seal **21** in the longitudinal direction are engaged with attaching grooves **26** formed on the lower surface of the front and rear end cap **2**B while the front end of the seal lip L_1 is set inside. The seal body **23** composing the seal lip portion of the under seal **21** allows the seal lip L_1, which protrudes inside a little from the side edge of the lower end face **24** of the slider body **2**A, to come into contact with the side surface **1***b* of the guide rail **1**.

[0211] On the other hand, the side seals **61** are respectively attached onto both end faces of the slider **2** when the screws **67** inserted into the attaching holes **65** are engaged with the screw holes (not shown) formed in the end caps **2**B. Concerning the seal body **63** composing the seal lip portion of the side seal **61**, the seal lips L_2 protruding to the inner edge respectively come into contact with the side surface **1***b* of the guide rail **1**, the groove surface of the ball rolling groove **3**, and the upper surface **1***a* of the guide rail **1**.

[0212] In this way, by the under seal **21**, a lower opening of the gap between the guide rail **1** and the slider **2** can be sealed. Further, by the side seal **61**, front and rear openings of the gap between the guide rail **1** and the slider **2** can be sealed. Accordingly, the intrusion of dirt and dust from the front, the rear and the lower portion of the slider **2** can be perfectly blocked.

[0213] Further, the self-lubricity is provided to the sliding surfaces of the under seal **21** and the side seal **61** by the lubricant-containing seal bodies **23**, **63**. Therefore, the sliding resistance of the contact seal is very low, and the abrasion seldom occurs.

[0214] Even when this linear guide is used in an environment in which dirt and dust such as chips of wood and chips of casting are scattered, and even when a portion of the lubricant is absorbed by the dirt and dust, lubricant is fed from the lubricant-containing seal bodies **23**, **63** at all times. Accordingly, there is no possibility of defective lubrication.

[0215] Further, a plurality of cutout portions are formed in the contact portion of the seal lip L_1 which comes into contact with the side **1***b* of the guide rail **1**, and also a plurality of cutout portions are formed in the contact portion of the seal lip L_2 which comes into contact with the upper face and the side of the guide rail **1**. By these cutout portions, both seal lips L_1 and L_2 are respectively divided into 4 pieces. Therefore, either of the pieces of the divided seal lip L_1 (L_2) is contacted with the outer surface of the guide rail **1**, the shape of which is complicated. In this way, the seal lip L_1 (L_2) can easily follow the shape of the guide rail **1**. Even if the under rail **21** or the side rail **61** is dislocated a little, the dislocation can be absorbed by the deformation of the divided portions.

[0216] Moreover, the seal lips L_1 and L_2 are respectively divided into 4 pieces. Therefore, the contact area of the seal lip of the thirtieth embodiment can be more increased than that of the seal lip of the conventional apparatus in which the seal lip is divided into 2 pieces. As a result, quantities of lubricant oozing from seal lips L_1 and L_2 can be increased. Further, since the numbers of the seal lips L_1 and L_2 are increased, the dust protecting function of the sealing device can be more enhanced, and the lubricant in the sealing device is prevented from diffusing outside.

[0217] Since three cutout portions are formed in each of the seal lips L_1 and L_2, it is possible to increase the lubricant holding space compared with the conventional apparatus in which one groove is formed in the seal lip. As a result, the-sliding property of the seal lips L_1 and L_2 can be enhanced.

[0218] In this connection, each seal lip L_1, L_2 is provided with three cutout portions and divided into four pieces. However, it should be noted that the present invention is not limited to the above specific embodiment. For example, each seal lip L_1, L_2 may be provided with two or not less than four cutout portions and divided into three or not less than five pieces.

[0219] Only the under seal on one side is shown in **FIG. 39**. However, the under seals can be attached onto the lower end faces **24** on both sides of the slider body **2**A. The under seal **21** is not necessarily attached by the engagement system, but the under seal **21** may be attached by rivets or screws. The essential point is that the sealing device of the present invention is not influenced by the attaching structure of the under seal **21**.

[0220] Several variations of the side seal are shown in FIGS. **43** to **51**.

[0221] The side seal shown in **FIG. 43** is arranged as follows. In the same manner as that of the thirtieth embodiment, three cutout portions **66***a* are formed in the seal lip L_2, so that the seal lip L_2 is divided into four pieces, and both outside pieces of the divided seal lip L_2 are made to be longer than other pieces. Due to the above arrangement, when the divided seal lip L_2 are made to come into contact with the guide rail **1**, both outside seal lips L_2 are greatly extended outside, so that the contact area can be increased. As a result, a quantity of lubricant oozing from the seal lip can be more increased, and the lubricant holding capacity of the seal lip can be more enhanced.

[0222] The side seal shown in **FIGS. 44 and 45** are arranged as follows. Checker-shaped cutout portions **66***b* are formed in the seal lip L_2. Therefore, the seal lip L_2 is divided into a large number of pieces by the checker-shaped cutout portions **66***b*. Due to the foregoing arrangement, the number and the contact area of the pieces of the divided seal lip L_2 can be more increased.

[0223] Cutout portions **66** formed in the side seals shown in FIGS. **46** to **49** are composed of not only simple straight lines but also curves. By the combination of straight lines and curves, zigzag cutout portions are formed. The side seal shown in **FIGS. 50 and 51** is arranged as follows. When the seal lip portions L_2 of the side seal comes into contact with the guide rail **1**, the cutout portion **66** is divided into two (a plural number). This arrangement is effective when the rigidity of the lip portion L_2 is required by increasing the width of its central portion.

[0224] As long as the slider is attached to the guide rail in such a manner that the slider strides the guide rail, the linear guide apparatus of the present invention is not limited to the specific type. For example, in the embodiments described above, the number of the ball rolling grooves **3** on one side is two, however, it is possible to apply the present invention to an apparatus, the number of the ball rolling grooves on one side of which is one or not less than three. In this case, of course, it is possible to form the sliding protrusions **64***a*, **64***b* of the side seal **61** in accordance with the ball rolling groove **3**.

[0225] In the embodiments described above, balls are used as the rolling elements. However, it should be noted that the present invention can be applied to an apparatus in which rollers are used as the rolling elements.

[0226] A direction of the cutout portions formed in the seal lips L_1, L_2 is not particularly limited. For example, the cutout portions may be formed in an arbitrary direction such as a direction oblique with respect to the axial direction of the guide rail.

[0227] In the embodiments described above, the cutout portions are formed on the overall inner circumferential wall of the side seal. However, the present invention is not limited to the specific embodiment. When necessary, the cutout portions may be formed only in a portion of the ball rolling groove **3** or on an upper surface of the guide rail **1**. In this way, the cutout portions may be formed only in a portion of the side rail.

[0228] In the embodiments described above, the main purpose of the side seal is to accomplish the sealing function. However, it is possible to adopt the following arrangement. In the slider, there is provided a conventional side seal to which a piece of nitrile rubber or urethane rubber is attached by melting. Different from the above side seal, there is provided in series a sealing device of the present invention. This sealing device may be used as a lubricant feed device to feed lubricant to the seal lip portion and the rolling elements of the conventional side seal.

[0229] There are formed a plurality of cutout portions in a portion of the seal lip which comes into pressure contact with an outer surface of the guide rail. Accordingly, either of the divided portions of the seal lip comes into contact with an outer surface of the guide rail, the shape of which is complicated. Therefore, the seal lip easily follows the complicated shape of the guide rail.

[0230] Further, there are provided a plurality of cutout portions in the seal lip portion. Accordingly, compared with the conventional sealing device in which one groove is formed in the seal lip portion, the contact area of the seal lip which comes into contact with the guide rail can be increased. As a result, it is possible to increase a quantity of lubricant oozing from the seal lip portion. Moreover, the number of the pieces of the divided seal lip can be increased more than the number of the pieces of the conventional seal lips. Accordingly, the dust protecting function of the sealing device can be more enhanced, and the lubricant in the sealing device is prevented from diffusing outside.

[0231] Since a plurality of cutout portions are formed in the seal lip, it is possible to increase the lubricant holding space compared with the conventional sealing device in which one groove is formed in the seal lip. As a result, the sliding **5** property of the seal lip can be enhanced.

What is claimed is:

1. A linear guide apparatus comprising:

an axially extending guide rail having a first rolling groove on its outer surface;

a slider engaged with the guide rail and having a second rolling groove, rolling element return grooves and curved grooves, the second rolling groove, confronting the first rolling groove, the rolling element return grooves being coupled to both end portions of the second rolling groove through the curved grooves, respectively;

a plurality of rolling elements loaded into the slider to be made circulatable through the second rolling groove, the curved grooves, and the rolling element return grooves; and

a sealing device fixed to the slider in slidable contact with the guide rail for sealing a clearance existing between the guide rail and the slider, the sealing device comprising:

a lubricant-containing polymer member formed of a synthetic resin containing a lubricant, and having a contact portion contacting with the guide rail to surround the guide rail, both wing portions, and a connecting portion connecting the wing portions to be C-shaped substantially; and

a first plate member fitted to the lubricant-containing polymer member, wherein the lubricant-containing polymer member is interposed between the slider and the first plate member.

2. The linear guide apparatus of claim 1, wherein the first plate member comprises a side seal.

3. The linear guide apparatus of claim 1, wherein the sealing device comprises a second plate member interposed between the slider and the lubricant-containing polymer member.

4. The linear guide apparatus of claim 3, wherein at least one of the first plate member and the second plate member comprises a side seal.

5. The linear guide apparatus of claim 1, wherein the wing portions and the connecting portion form an opening so that the lubricant-containing polymer member is C-shaped substantially, and the lubricant-containing polymer member is deformable so that the opening shrinks.

6. The linear guide apparatus of claim 1, wherein the lubricant-containing polymer member is deformable in a direction of moving the wing portions toward each other to press the contact portion against the guide rail.

7. The linear guide apparatus of claim 1, wherein the lubricant-containing polymer member has an inner bottom face arc-shaped in the connecting portion which elastically protrudes toward the guide rail.

8. The linear guide apparatus of claim 1, wherein the sealing device comprises a pair of first recesses formed in the respective wing portions for fixing the lubricant-containing polymer member to the slider and a pair of first cylindrical members inserted to the respective first recesses.

9. The linear guide apparatus of claim 8, wherein the lubricant-containing polymer member includes a second recess formed in the connecting portion, and the sealing device comprises a second cylindrical member inserted to the second recess, the second cylindrical member having an outer diameter larger than an inner diameter of the second recess.

10. The linear guide apparatus of claim 8, wherein each of the first cylindrical members has a ring shape.

11. The linear guide apparatus of claim 1, wherein the lubricant-containing polymer member has an elastic member to press against the guide rail.

12. The linear guide apparatus of claim 11, wherein the elastic member extends along the contact portion, the elastic member being fitted closed to the contact portion.

13. The linear guide apparatus of claim 1, wherein the sealing device comprises a second plate member interposed between the slider and the lubricant-containing polymer member.

14. The linear guide apparatus of claim 8, wherein each of the first cylindrical members has an axial length larger than a thickness of the lubricant-containing polymer member.

15. The linear guide apparatus of claim 9, wherein the second cylindrical member has an axial length larger than a thickness of the lubricant-containing polymer member.

16. The linear guide apparatus of claim 1, wherein the lubricant-containing polymer member is formed of polyolefinic polymer containing the lubricant of 20 to 80% by weight.

17. The linear guide apparatus of claim 1, wherein the first plate member is formed of nitrile rubber.

18. The linear guide apparatus of claim 1, wherein the lubricant-containing polymer member comprises a plurality of seal lips formed in the contact portion to contact the guide rail slidingly, the seal lips comprising a plurality of cutout portions arranged in a thickness direction of the sealing device.

19. A linear guide apparatus comprising:

an axially extending guide rail having a first rolling groove on its outer surface;

a slider engaged with the guide rail and having a second rolling groove, rolling element return grooves and curved grooves, the second rolling groove confronting the first rolling groove, the rolling element return grooves being coupled to both end portions of the

second rolling groove through the curved grooves, respectively;

a plurality of rolling elements loaded into the slider to be made circulatable through the second rolling groove, the curved grooves, and the rolling element return grooves; and

a sealing device fixed to the slider in slidable contact with the guide rail for sealing a clearance existing between the guide rail and the slider, the sealing device comprising:

a side seal directly or indirectly fixed to the slider and having a seal lip contacting with the guide rail; and

a lubricant-containing polymer member formed of a synthetic resin containing a lubricant and disposed closed to the seal lip.

20. The linear guide apparatus of claim 1,**9**, wherein the lubricant-containing polymer member includes a contact portion contacting with the guide rail.

21. The linear guide apparatus of claim 19, wherein the side seal is formed of a material cured with polyurethane rubber containing grease.

22. The linear guide apparatus of claim 19, wherein the lubricant-containing polymer member is formed of polyolefinic polymer containing the lubricant of 20 to 80% by weight.

* * * * *