US 20040046292A1

(19) **United States**

(12) **Patent Application Publication**

(10) **Pub. No.: US 2004/0046292 A1**

(43) **Pub. Date: Mar. 11, 2004**

Heinrich

(54) **COOLING ELEMENT FOR SHAFT FURNACES**

(76) Inventor: **Peter Heinrich**, Geldern (DE)

Correspondence Address:
Friedrich Kueffner
Suite 910
317 Madison Avenue
New York, NY 10017 (US)

(21) Appl. No.: **10/381,357**

(22) PCT Filed: **Sep. 28, 2001**

(86) PCT No.: **PCT/EP01/11221**

(30) **Foreign Application Priority Data**

Oct. 7, 2000 (DE)..... 100 49 707.1

Publication Classification

(51) **Int. Cl.**[7] **C21B 7/10**

(52) **U.S. Cl.** **266/194**; 266/193

(57) **ABSTRACT**

The invention relates to a cooling element for shaft furnaces, comprising an area **(8)** which is cross-flown by a cooling agent, resulting from an arrangement of at least one channel **(9)** which conveys a cooling agent internally and which leads into tubular elements **(3,4)** for feeding and discharging said coolant which are joined to the coo ling element **(1,2)**, in addition to comprising edge areas with improved cooling properties. The respective channel conveying the cooling agent extends beyond the area where the tubular elements lead into the edge area at cooling agent feed and/or discharge level and has an expanded diameter in comparison with that of the internal channel **(9)**, a guiding element **(14)** partially dividing the channel section **(13)** in the direction of flow in order to guide the cooling agent into the edge area of the cooling element and return said agent counter to the direction of said flow.

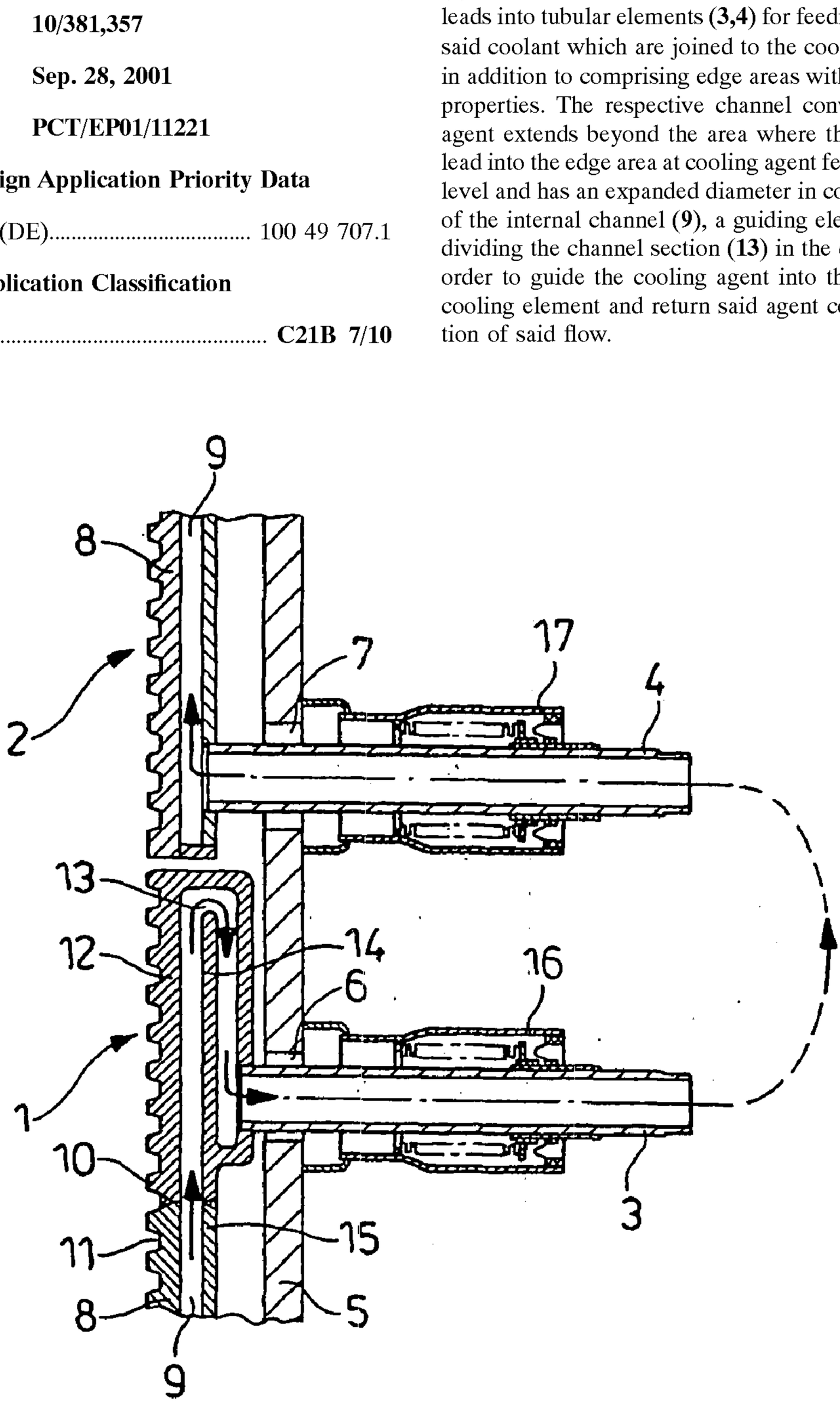

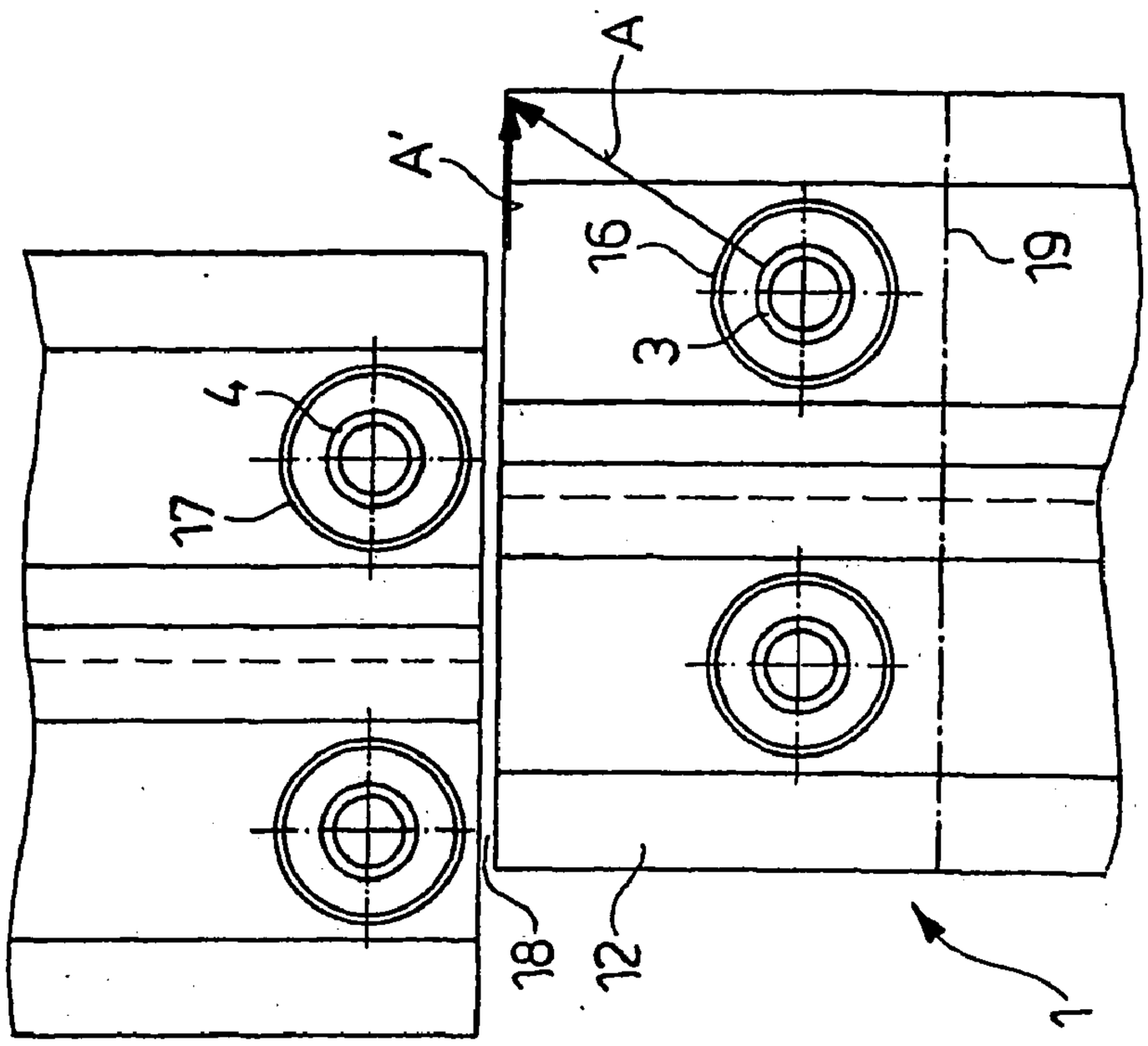

Fig. 2

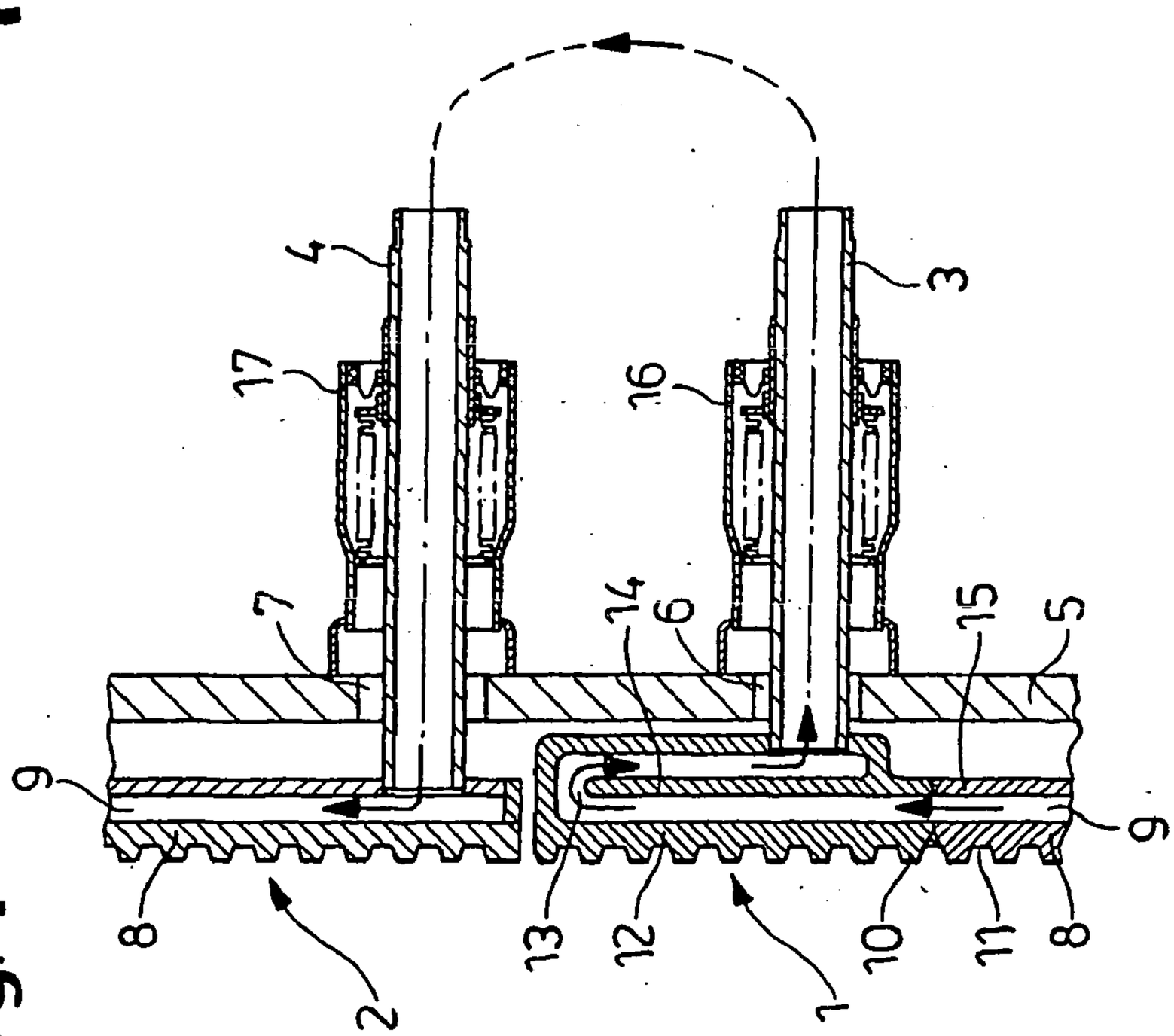

Fig. 1

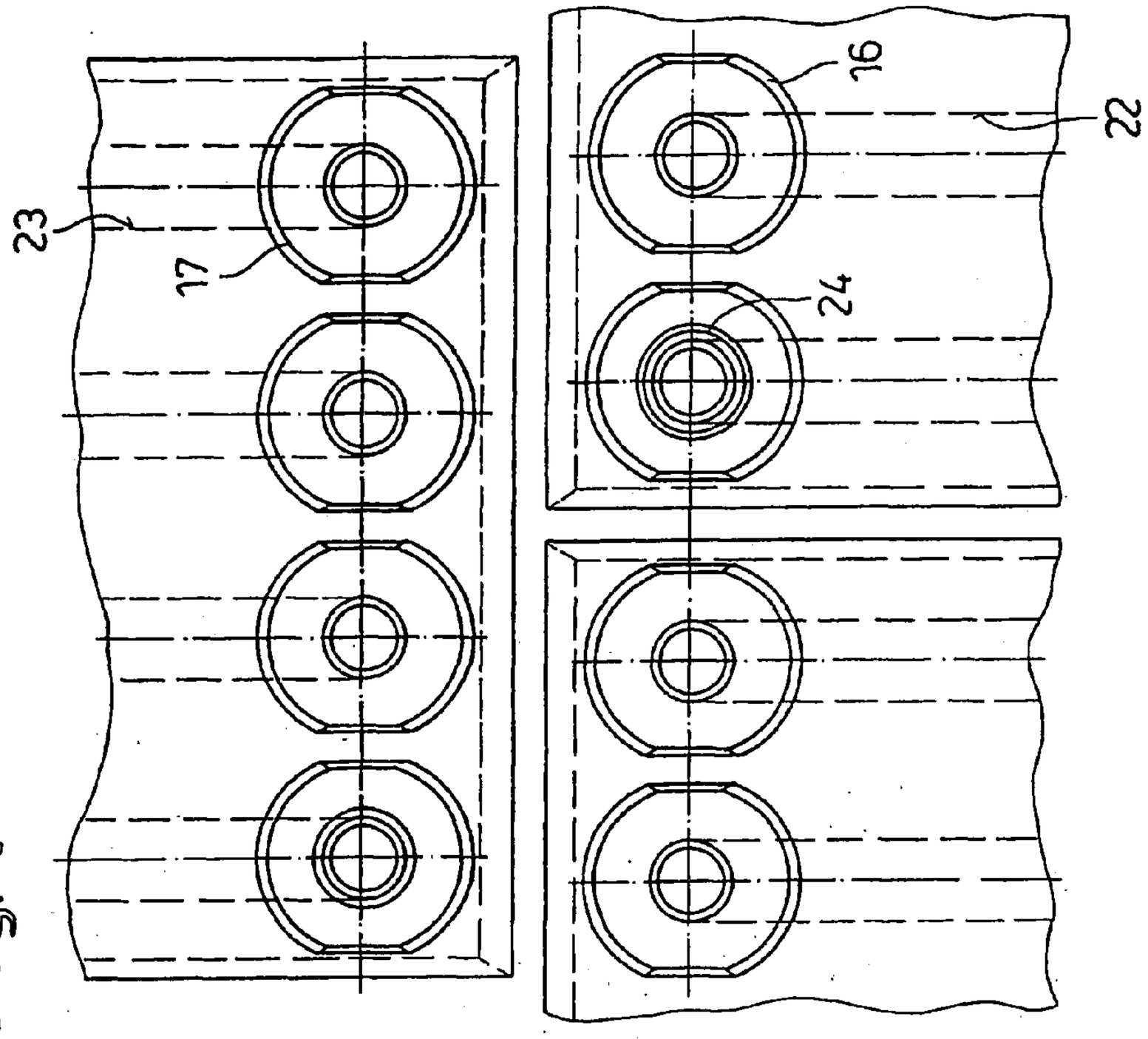

Fig. 4

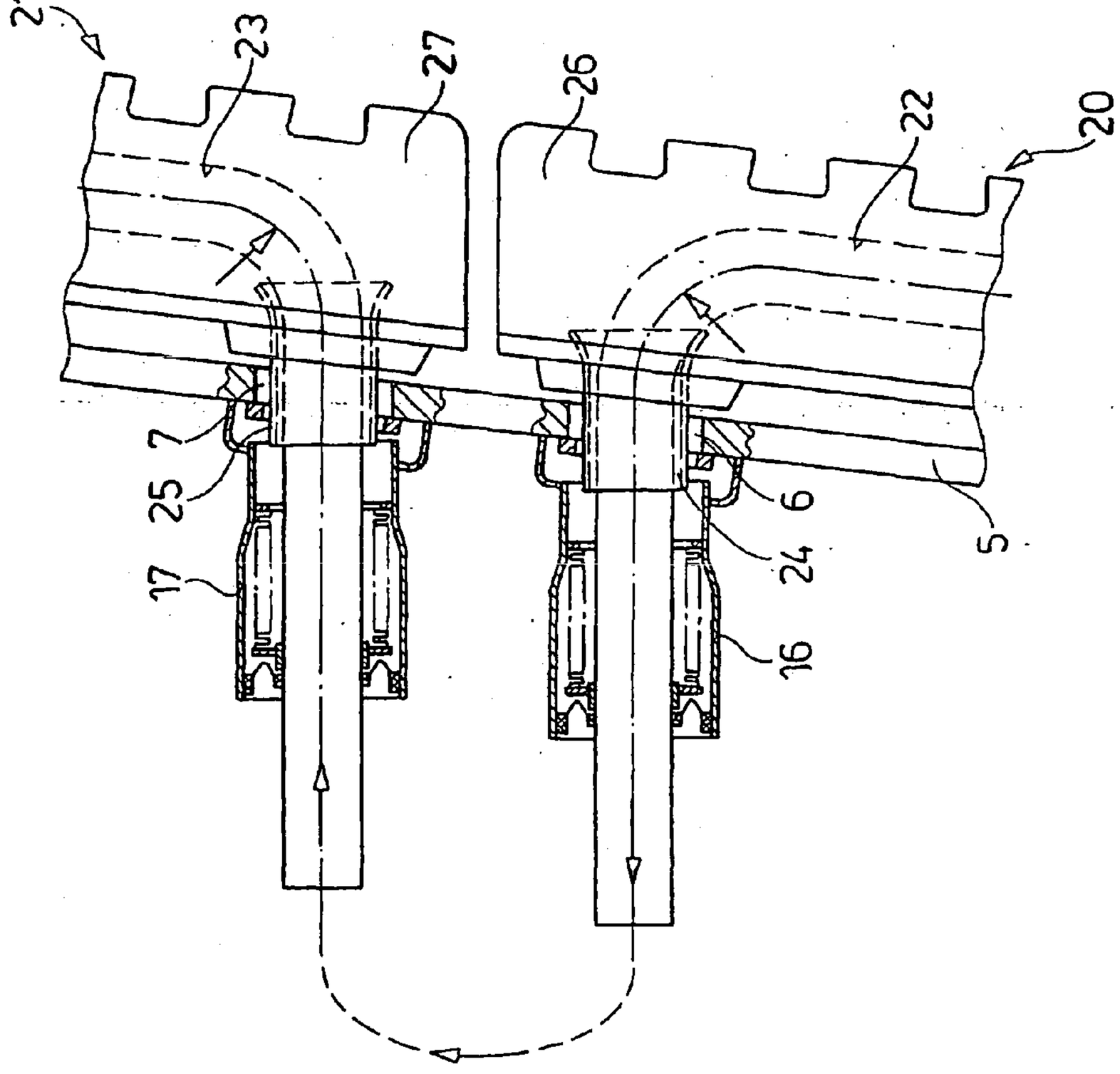

Fig. 3

COOLING ELEMENT FOR SHAFT FURNACES

[0001] The invention pertains to a cooling element for shaft furnaces, especially blast furnaces, with an area through which a coolant, preferably water, flows as the result of the arrangement of at least one internal coolant-carrying channel, which leads to coolant feed and discharge pipes connected to the cooling element, the cooling element also having edge areas.

[0002] Cooling elements of this type, also known as "staves", serve to cool the walls of blast furnaces. They are usually installed between the steel furnace jacket and the furnace lining and are provided with refractory material on the side facing the interior of the furnace.

[0003] Cooling elements are known in which the cooling channels are formed by pipes, usually made of steel, which are cast into a matrix of cast iron. The cooling channels passing through the cooling element are usually arranged vertically with respect to the longitudinal axis of the base body. These plates can also consist of cast copper instead of cast iron. In addition, forged or rolled cooling plates of copper or low-alloy copper are also known, the cooling channels of which are vertically oriented blind bores, which are introduced by deep mechanical drilling or milling. Finally, it is also known that a cooling element-can be produced from one or more extruded or rolled profiled sections, the interiors of which are provided with coolant channels.

[0004] A feature essentially common to all of the known staves is that they have an area through which a coolant flows as the result of the arrangement of cooling channels, which lead to coolant feed and discharge pipes passing through the wall of the blast furnace, the staves also having edge areas, which extend essentially beyond the pipes. These edge areas are not cooled as intensively, of course, as the area of the staves through which the cooling channels pass. The reason for the less intensive cooling of the edge areas is the disproportionately large distance between the coolant-carrying area and the corners or edges of the staves, that is, the end areas. The heat which accumulates there must be transported by conduction to the cross section through which the coolant flows. This leads to higher temperatures at the corners and edges than in the other areas of the stave and thus to thermal stresses, to overheating, and to premature wear. Staves of cast iron in particular suffer losses of material especially at the corners and edges, as a result of which ultimately the adjacent areas of the steel jacket around the blast furnace are no longer adequately protected. It thus becomes necessary to replace the staves in question. In the case of copper staves, the same basic problems also occur, but because of the much higher thermal conductivity of copper, they occur later and to a less pronounced degree.

[0005] For geometric and manufacturing reasons, the cooling pipes cannot be moved as far as one might wish into the edge areas of the staves to improve the cooling effect. So-called "compensators", furthermore, are installed on the outside surface of the steel jacket of the furnace, which have the job of allowing the cooling pipes to pass in a gas-tight manner through the steel jacket. Because of their geometric dimensions, these compensators require that the centers of the cooling pipes must be maintained at certain vertical and horizontal distances from each other. These distances must also be maintained so that the steel jacket of the furnace is not weakened too much, which could be the case if the holes were too closely spaced in their rows. In the case of staves with cast-in pipes, furthermore, the outside diameter and wall thickness of the pipes limit the degree to which they can be bent, which means that it is impossible to bend them into a shape which could allow them to pass through the edge area.

[0006] The problem of inadequate cooling at the corners and edges of the cooling elements is solved by the cooling plate described in EP 94 115 821, in that its edge areas are provided with bores, the cross section of which is smaller than that of the, cooling channels proper. Considered overall, an independent cooling system with its own coolant inlets and outlets is proposed, this system being obtained by the use of vertical and horizontal bores in the edge area. Also provided-are the required pipe connectors, which extend through the blast furnace wall.

[0007] The invention is based on the task of creating a cooling element of the basic type in question which offers improved cooling in the end areas, that is, at the edges.

[0008] To accomplish this task, a cooling element with the features of claim 1 is proposed. Advantageous elaborations are disclosed in the subclaims.

[0009] In contrast to the state of the art, the proposed cooling system is not an independent cooling system with its own pipe connectors—which weaken the wall of the blast furnace—but rather a modification of the coolant feed system according to which the cooling channels passing through the base body are extended all the way to the edge areas, including the corner areas, if desired. In the area where the coolant leaves the stave, the cross section of the channel extending through the edge area is comparatively larger and is provided with a (coolant) guide element, so that the coolant, coming from the base body, flows into the edge area, reverses direction, and flows back essentially in the opposite direction to the opening of the pipe. At the end where the coolant enters the stave, the coolant is guided first to the edge area and flows from there into the base body through the cooling channel. It is advantageous here for the cross section of the cooling section to be doubled, so that the actual cross sections of the two parts of the channel in the cooling section which carry the coolant in opposite directions will be the same as that of the main cooling channel in the base body. As a result of this measure, a homogeneous flow velocity is obtained within the cooling system.

[0010] The cooling effect on the edge and corner areas of the stave is therefore improved without the need to make any change in the spacing of the cooling pipe pass-throughs, i.e., in the spacing of the pipes passing through the steel jacket of the furnace, this being the spacing which is determined by the compensators. Overall, therefore, the goal is achieved that the coolant can be conducted right to the edges of the staves. The distance which still remains between the areas through which the cooling water can flow and those through which it cannot flow is thus significantly reduced, namely, to the same value which is present in the regular part of the cooling element and which is sufficient for adequate cooling.

[0011] As an especially preferred embodiment, it is proposed that the edge area of the cooling element be designed as a separate endpiece, the cooling channel sections of which are provided with guide elements. The separate endpiece is

attached to the base body, which carries the internal cooling channels. The endpiece can be manufactured as a single unit in the form of a casting or forging, for example, or it can consist of several pieces which are welded together. The endpiece is preferably designed so that it already has an appropriate bore for receiving the opening of the coolant feed or discharge pipe which passes in each case through the wall of the shaft furnace.

[0012] In the case of a stave with a base body with several vertical cooling channels, the endpiece which is provided should have the same number of cooling sections as there are internal vertical cooling channels. In the case of a stave assembled from several profiled sections, the number of endpieces could correspond to the number of profiled sections.

[0013] A preferred embodiment of the cooling element according to the invention is described in the following:

[0014] **FIG. 1** shows a side view of parts of two cooling elements with endpieces as proposed according to the invention, one element being installed above the other;

[0015] **FIG. 2** shows a view of the cooling elements according to **FIG. 1** from the perspective of the steel jacket around the furnace;

[0016] **FIG. 3** shows a side view of parts of two cooling elements according to the state of the art, one installed above the other; and

[0017] **FIG. 4** shows a view of the cooling elements according to **FIG. 3** from the perspective of the steel jacket of the furnace.

[0018] **FIG. 1** shows parts of two staves **1**, **2**. A pipe **3** for the discharge of coolant is connected to the top end of the lower stave **1**, whereas a pipe **4** for supplying coolant is connected to the bottom end of the upper stave **2**. The pipes **3**, **4** themselves pass through openings **6**, **7** in the furnace wall **5**.

[0019] Each of the staves **1**, **2** comprises a base body **8** with vertical cooling channels **9**. The staves consist of copper or of a low-alloy copper. On the side facing the interior of the furnace, the staves **1**, **2** are provided with webs and grooves **10**, **11** to accept refractory material. An endpiece **12** as proposed by the invention is welded to the top end of the base body **8** of the stave **1**. This endpiece has a channel section **13** forming an extension of the associated vertical cooling channel **9** or several channel sections forming extensions of the several cooling channels in the base body, only one of which can be seen in the cross-sectional view shown. The cross section of the channel section **13** is larger than that of the vertical cooling channel **9** and is divided over part of its length by a guide element **14**. In the embodiment shown, the guide element **14** forms a direct extension of the side **15** of the channel which can be seen in the base body, i.e., the side facing the steel jacket of the furnace.

[0020] When castings are used, an appropriate bore is introduced into the separate endpiece at the level of the pipe **3**, so that the endpieces can be connected to the pipes passing through the blast furnace wall. When a welded construction is used, the endpiece can be made of several parts, which are then welded together.

[0021] The way in which the water flows through the lower stave **1** and its top part **12** is described below and illustrated with the help of arrows. The cooling water is guided through the proposed endpiece **13** in such a way that it first flows up all the way to the very edge of the cooling element. Then, after reversing direction by 180°, it flows a short distance in the direction opposite its original flow direction and then is redirected again, this time by 90°, into the pipe **3** and thus passes through the pipe **3** and an elbow (not shown, merely suggested by a broken line) to the pipe **4** of the stave **2** located on top. After the cooling water has flowed through the uppermost stave, it is sent into the coolant circuit of the blast furnace.

[0022] The pipes **3**, **4** themselves are surrounded by compensators **16**, **17**, which are necessary to ensure a gas-tight seal of the pipes. It is evident that optimal cooling of the edge areas of the cooling elements is achieved in spite of the spacing of the pipes **3**, **4** necessitated by the compensators **15**, **17**.

[0023] The endpieces are preferably provided with the pipes **3** before said endpieces are installed.

[0024] It is not absolutely necessary for both the top and bottom ends of each stave to be replaced with an endpiece according to the invention with its modified water channel. Even if the modified water channel is provided at only one end (as shown here), the cooling capacity is increased in the edge areas of both adjoining staves. It is advantageous for a stave to be provided with a separate endpiece at only one end. Although such an endpiece will be longer than would be the case if two endpieces were used, that is, one at the top and one at the bottom, it offers economic advantages in terms of manufacturing.

[0025] **FIG. 2** shows how the staves are installed on the furnace wall when the staves in question have endpieces only at their top ends. The staves **1**, **2** shown here are assembled from extruded or rolled sections, which are welded together at the webs extending along their long edges (see the dashed line). As indicated by the dash-dot line of the weld **19**, each section is welded at the top end to an endpiece **12** with the water flow system according to the invention. The distance between the water feed pipes and the seam **18** between the two stacked staves **1**, **2** is different from that between the water discharge pipes and the seam. The seam is thus not equidistant between the pipes (see **FIG. 4**).

[0026] The distances A and A' in **FIG. 2** are intended to show how, as a result of the water-cooled endpiece **12** with its flow-guiding element **14**, the distance between the area through which cooling water flows and the outer edges of the staves is reduced, resulting in an improved cooling action in the corners and edges.

[0027] It should be mentioned that an endpiece attached to the top end offers the advantage of providing a fixed point by which the cooling element can be hung in place. Attaching the endpiece to the bottom end of the cooling element, however, offers the advantage of reducing the danger of the formation of air or vapor spaces, the insulating effect of which could interfere with good cooling.

[0028] For comparison, **FIG. 3** shows the water flow system of the previously known staves. The parts of these cooling elements which are the same as those in **FIG. 1** have been given the same——reference numbers. The staves **20**,

21 shown here are provided with cast-in pipes **22**, **23** as cooling channels, which are guided by means of suitable shield pipes **24**, **25** through appropriate openings **6**, **7** in the furnace wall **5**. The flow of cooling water between the two staves is again indicated by a broken line. It is evident that, in comparison with the cooling elements proposed in accordance with the invention, much larger edge areas **26**, **27** are not cooled, which are therefore subject to greater wear. For comparison with **FIG. 2**, **FIG. 4** shows a view of stacked cooling elements **20**, **21** with vertical cooling channels **22**, **23** according to the state of the art. In this previously conventional stave arrangement, the seam between two staves arranged vertically one above the other along the furnace wall is basically the same distance away from the two sets of cooling channels and is therefore in the center between the associated edge areas.

1. Cooling element for shaft furnaces

with an area **(8)** through which coolant flows as a result of the arrangement of at least one internal coolant-carrying channel **(9)**, which leads to coolant feed and discharge pipes **(3, 4)** connected to the cooling element **(1, 2)** and

with edge areas,

characterized in that

at the end of the element where the coolant enters and/or exits, the coolant-carrying channel in question extends beyond the opening of the pipe and into the edge area of the cooling element and has a cross section which is larger than that of the cross section of the internal channel **(9)**, this cooling section **(13)** being provided with a guide element **(14)**, which divides the channel lengthwise in the flow direction so that the coolant is guided to the edge area of the cooling element and then back again in the opposite direction.

2. Cooling element according to claim 1, characterized in that the edge area, including the associated cooling section **(13)** with the guide element **(14)**, is designed as at least one separate endpiece, which is attached to the base body **(8)** with the internal cooling channels **(9)**.

3. Cooling element according to claim 2, characterized in that the separate endpiece **(12)** is designed as a casting or as a welded construction and is welded to the base body.

4. Cooling element according to one of claims **1-3**, characterized in that the cross-sectional dimension of the channel section **(13)** is approximately twice that of the cooling channel **(9)** in the base body **(8)**, and in that the guide element is arranged so that it divides the channel section **(13)** into two cooling channels with corresponding dimensions.

5. Cooling element according to one of claims **1-4**, characterized in that the separate endpiece **(12)** is provided on the side facing the steel jacket of the furnace with at least one bore, into which the open end of the associated coolant feed or discharge pipe **(3, 4)** is introduced and welded.

6. Cooling element according to one of claims **1-5**, characterized in that it comprises

a base body **(8)** consisting of at least two extruded or rolled sections which are welded together, through which element at least one cooling channel **(9)** passes, and

endpieces **(12)**, the number of which corresponds to the number of sections, the endpieces being welded to the top or bottom of the sections.

* * * * *