US 20030197922A1

(19) **United States**

(12) **Patent Application Publication**

(10) **Pub. No.: US 2003/0197922 A1**

(43) **Pub. Date: Oct. 23, 2003**

Hudyma

(54) **CATADIOPTRIC PROJECTION SYSTEM FOR 157 NM LITHOGRAPHY**

(75) Inventor: **Russell Hudyma**, San Ramon, CA (US)

Correspondence Address:
DARBY & DARBY P.C.
P. O. BOX 5257
NEW YORK, NY 10150-5257 (US)

(73) Assignee: **Carl Zeiss SMT AG**, Oberkochen (DE)

(21) Appl. No.: **10/444,897**

(22) Filed: **May 23, 2003**

Related U.S. Application Data

(63) Continuation of application No. PCT/EP01/13851, filed on Nov. 28, 2001.

(60) Provisional application No. 60/253,508, filed on Nov. 28, 2000. Provisional application No. 60/250,996, filed on Dec. 4, 2000.

Publication Classification

(51) **Int. Cl.**[7] **G02B 5/08**

(52) **U.S. Cl.** **359/359**; 359/364; 359/365; 359/726; 359/850

(57) **ABSTRACT**

A photolithographic reduction projection catadioptric objective includes a first optical group G**1** including an even number of at least four mirrors M**1**-M**6;** and a second at least substantially dioptric optical group G**2** imageward than the first optical group G**1** including a number of lenses E**4**-E**13.** The first optical group G**1** provides compensative axial aberrative correction for the second optical group G**2** which forms an image with a numerical aperture of at least substantially 0.65, and preferably at least 0.70 or 0.75. Six mirror examples are shown.

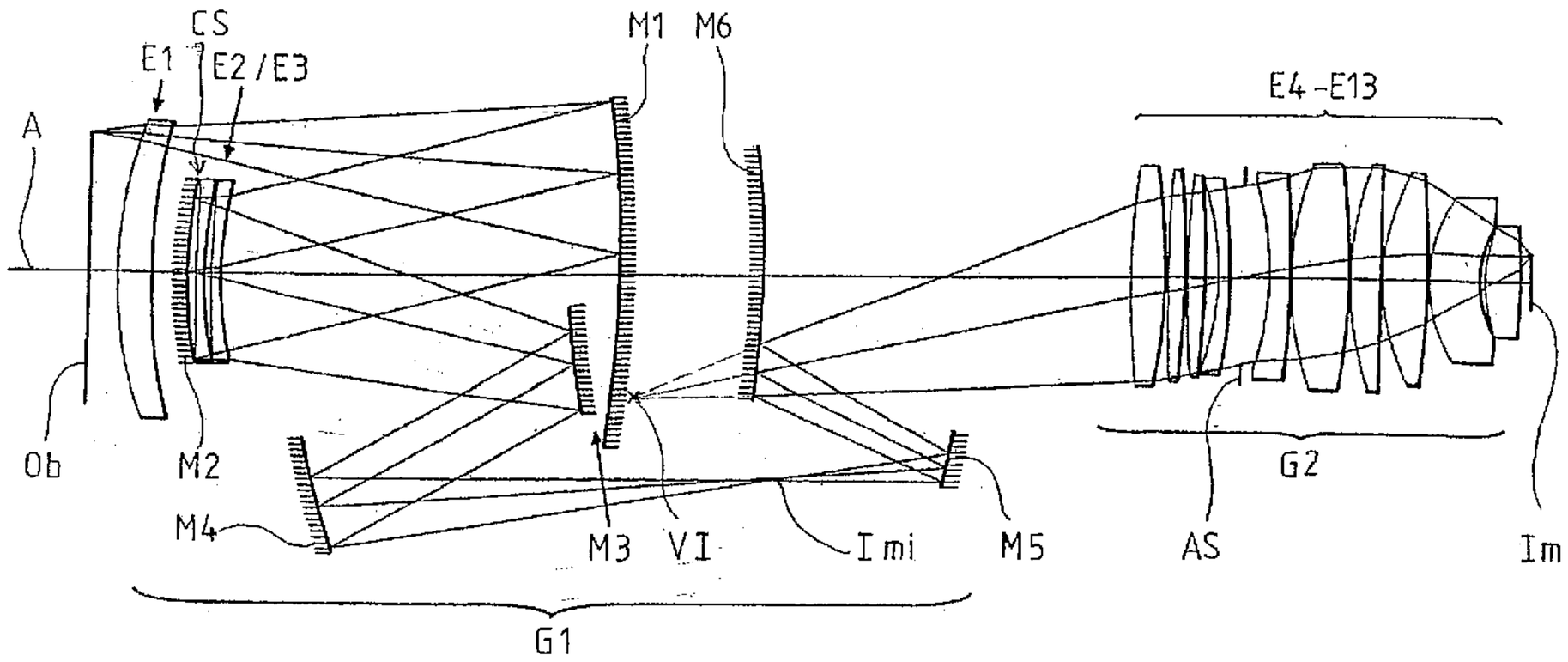

FIG.1

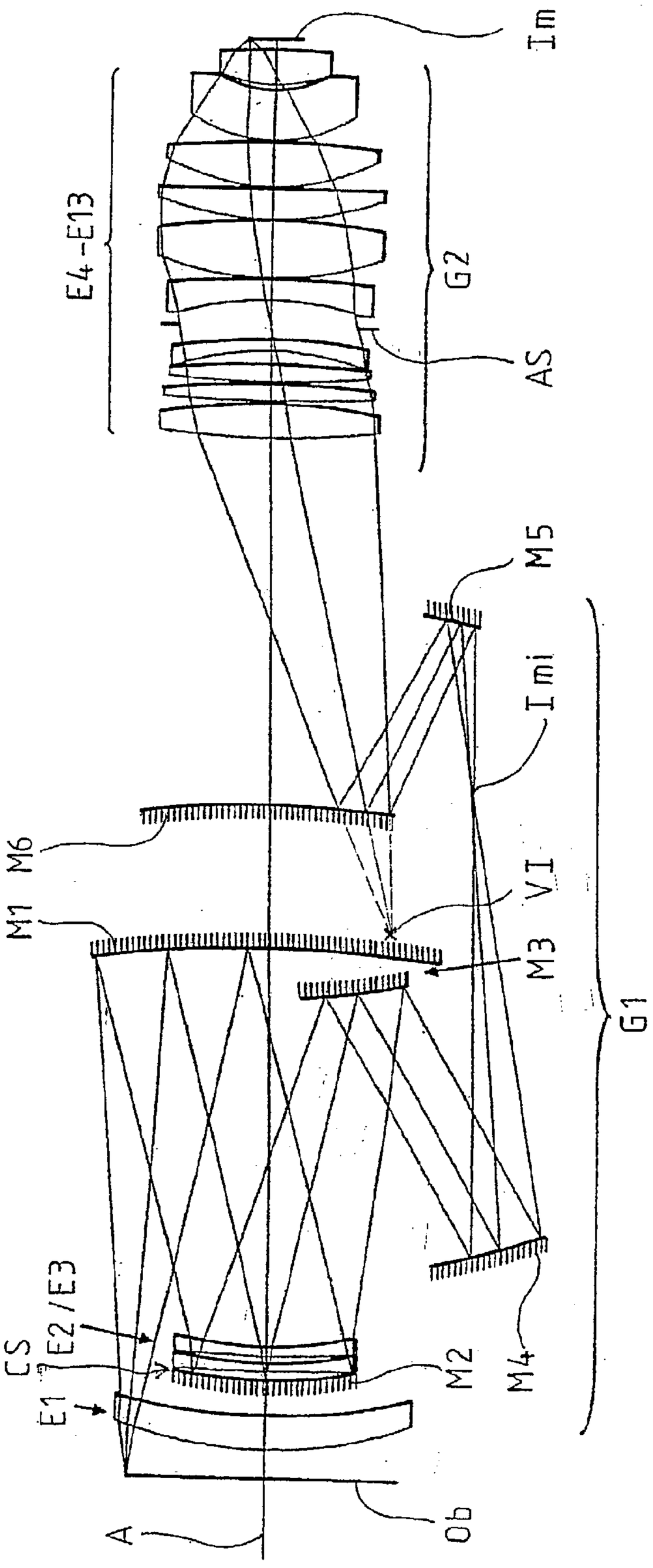

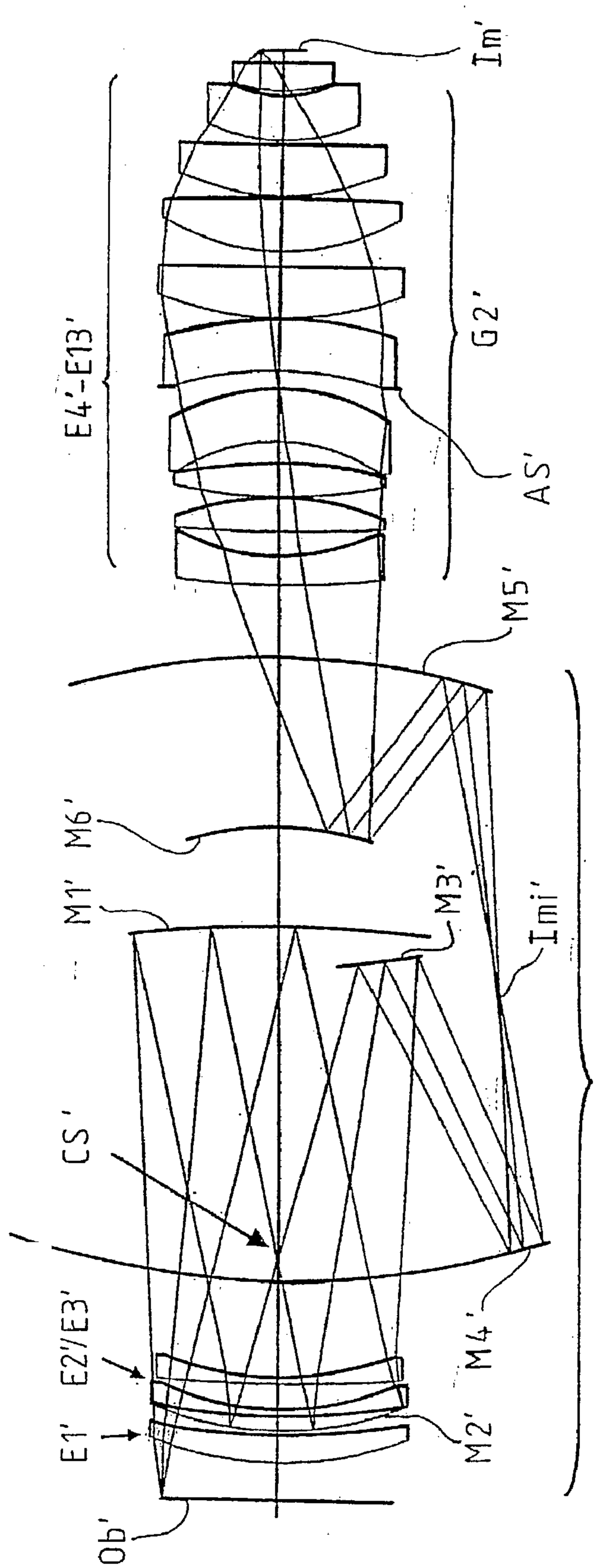

FIG.2

CATADIOPTRIC PROJECTION SYSTEM FOR 157 NM LITHOGRAPHY

CROSS REFERENCE TO RELATED APPLICATIONS

[0001] This application is a continuation of International Application Serial No. PCT/EP01/13851, filed Nov. 28, 2001 and published in English on Jun. 6, 2002, which is still pending, and which claims priority from U.S. Provisional Patent Application Serial No. 60/253,508, filed Nov. 28, 2000 and from U.S. Provisional Patent Application Serial No. 60/250,996, filed Dec. 4, 2000, all of which are hereby incorporated by reference in their entirety.

BACKGROUND OF THE INVENTION

[0002] 1. Field of the Invention

[0003] The invention relates to projection systems for photolithography, and particularly to catadioptric systems including first and second optical imaging groups for 157 nm lithography.

[0004] 2. Discussion of the Related Art

[0005] Extending DUV lithography to sub 100-nm linewidths requires a projection system with a high numerical aperture, e.g., 0.65-0.75 or larger, at a wavelength of 157 nm. As optical lithography is extended into the vacuum ultraviolet (VUV), issues surrounding the laser linewidth and material availability could cause substantive delays to the development of a commercial 157 nm step/repeat or step/scan tool. Therefore, it is desired to investigate optical configurations that minimize the consumption of calcium fluoride.

[0006] Microlithographic reduction projection catadioptric objectives, such as that shown and described with respect to **FIG. 3** of European patent application no. EP 0 779 528 A2, which is hereby incorporated by reference, may be understood as variants of pure catoptric objectives. **FIG. 3** of the '528 application shows a system having six minors and three lenses. The optical surfaces are generally symmetric to a common axis, and the object plane and the image plane are situated on this same axis upstream and downstream of the objective, respectively. As described in the '528 application, the system of **FIG. 2** therein has a numerical aperture of only 0.55 and that of **FIG. 3** therein only 0.6. In addition, all but one of the six mirrors shown at **FIG. 3** are cut off sections of a bodies of revolution, yielding mounting and adjustment face difficulties. Also, the lenses shown in **FIG. 3** serve only as correcting elements having minor effect. In addition, the most imageward (or optically closest to the image plane) mirror described in the '528 application is concave. It is desired to have an objective with a higher numerical aperture, and which is constructed for easier mounting and adjustment.

[0007] A similar objective to that described in the '528 application (above) is disclosed at U.S. Pat. No. 4,701,035, which is hereby incorporated by reference. The objective shown at **FIG. 12** of the '035 patent, for example, has nine mirrors, two lenses and two intermediate images. The object plane and image plane are situated within the envelope of the objective. The objective described in the '035 application also exhibits a low numerical aperture and offers similar mounting and adjustment difficulties as described above with respect to the '528 application. In both the '528 and '035 applications, the image field is an off-axis ring sector.

[0008] An axially symmetric type of catadioptric objective is disclosed in German patent document DE 196 39 586 A (see also U.S. patent application Ser. No. 09/263,788), each application of which is hereby incorporated by reference. The '586 application discloses an objective having two opposing concave mirrors, an image field centered at the common axis and a central obscuration of the aperture. It is recognized herein that it is desired to have an axially symmetric objective having an unobscured aperture. Another type of catadioptric objective for microlithographic reduction projection has only one concave mirror and a folding mirror, as is described at U.S. Pat. No. 5,052,763 and European patent application no. EP 0 869 383 A, which are each hereby incorporated by reference.

[0009] It is recognized herein that catadioptric optical systems have several advantages, especially in a step and scan configuration, and that it is desired to develop such systems for wavelengths below 365 nm. One catadioptric system concept relates to a Dyson-type arrangement used in conjunction with a beam splitter to provide ray clearance and unfold the system to provide for parallel scanning (see, e.g., U.S. Pat. Nos. 5,537,260, 5,742,436 and 5,805,357, which are incorporated by reference). However, these systems have a serious drawback since the size of this beam splitting element becomes quite large as the numerical aperture is increased up to and beyond 0.65 to 0.70, malting the procurement of bulk optical material with sufficient quality (in three-dimensions) a high risk endeavor. This problem is exacerbated as wavelengths are driven below 193 nm because the selection of material that can be manufactured to lithographic quality is severely limited.

[0010] To circumvent this problem, it is recognized herein that it is desired to develop systems without beamsplitters. However, it is difficult to achieve an adequately high numerical aperture (e.g., U.S. Pat. Nos. 4,685,777, 5,323,263, 5,515,207 and 5,815,310, which are incorporated by reference), or to achieve a fully coaxial configuration, instead of relying on the use of folding mirrors to achieve parallel scanning (e.g., U.S. Pat. No. 5,835,275 and EP 0 816 892, which are incorporated by reference) and thereby complicating the aligmnent and structural dynamics of the system. In addition, it is desired to have an optical design that generally does not utilize too many lens elements, which can greatly increase the mass of the optical system.

[0011] WO 01/51 979 A (U.S. ser. Nos. 60/176,190 and 09/761,5762) and WO 01/55767 A (U.S. ser. No. 60/176,190 and 09/759,806—all commonly owned and published after the priority date of this application—show similar coaxial catadioptric objectives with 4 mirrors or more.

[0012] EP 1 069 448 A1 published after the priority date of this application shows a coaxial catadioptric objective with two curved mirrors and a real, intermediate image located besides the primary mirror.

[0013] All cited publications are incorporated herein by reference in their entirety. It is desired to develop a compact, coaxial, catadioptric projection system for deep ultraviolet and/or vacuum ultraviolet lithography that uses no beamsplitters or fold mirrors in is optical path.

[0014] It is an object of the invention to provide an objective for microlithographic projection reduction having

high chromatic correction of typical bandwidths of excimer laser light sources, which permits a high image-side numerical aperture, and which reduces complexity with respect to mounting and adjusting.

SUMMARY OF THE INVENTION

[**0015**] In view of the above, a photolithography reduction projection catadioptric objective is provided including a first optical group including an even number of at least four mirrors, and a second at least substantially dioptric optical group more imageward than the first optical group including a number of lenses for providing image reduction. The first optical group provides compensative axial color correction for the second optical group according to claim 1. Other variations and preferred embodiments are subject of claims 2 to 26.

[**0016**] A preferred embodiment according to claim 11 is a photolithographic reduction projection catadioptric objective including a first optical group including an even number of at least six mirrors, and a second at least substantially dioptric optical group more imageward than the first optical group including a number of lenses for providing image reduction. This increased number of mirrors gives more degrees of freedom to the correction and simplifies the design for stressed qualities.

BRIEF DESCRIPTION OF THE DRAWING

[**0017**] **FIG. 1** shows the lens section of a projection objective for 157 nm photolithography according to a first preferred embodiment.

[**0018**] **FIG. 2** shows the lens section of a second preferred embodiment.

INCORPORATION BY REFERENCE

[**0019**] What follows is a cite list of references which are, in addition to the references cited above in the background section, hereby incorporated by reference into the detailed description of the preferred embodiment, as disclosing alternative embodiments of elements or features of the preferred embodiment not otherwise set forth in detail herein with reference to **FIG. 1** or **FIG. 2**. A single one or a combination of two or more of these references may be consulted to obtain a variation of the preferred embodiment described above. Further patent, patent application and non-patent references, and discussion thereof, cited in the background and/or elsewhere herein are also incorporated by reference into the detailed description of the preferred embodiment with the same effect as just described with respect to the following references:

[**0020**] U.S. Pat. Nos. 5,323,263, 5,515,207, 5,052,763, 5,537,260, 4,685,777, 5,071,240, 5,815,310, 5,401,934, 4,595,295, 4,232,969, 5,742,436, 5,805,357, 5,835,275, 4,171,871, 5,241,423, 5,089,913, 5,159,172, 5,608,526, 5,212,588, 5,686,728, 5,220,590, 5,153,898, 5,353,322, 5,315,629, 5,063,586, 5,410,434, 5,956,192, 5,071,240, 5,078,502, 6,014,252, 5,805,365, 6,033,079, 4,701,035 and 6,142,641; and German patent no. DE 196 39 586 A; and U.S. patent applications Nos. 09/263,788 and 09/761,562; and European patent applications no. EP 0 816 892 A1, EP 0 779 528 A2 and EP 0 869 383 A; and

[**0021**] "Design of Reflective Relay for Soft X-Ray Lithography", J. M. Rodgers, T. E. Jewell, International Lens Design Conference, 1990;

[**0022**] "Optical System Design Issues in Development of Projection Camera for EUV Lithography", T. E. Jewell, SPIE Volume 2437, pages 340-347;

[**0023**] "Ring-Field EUVL Camera with Large Etendu", W. C. Sweatt, OSA TOPS on Extreme Ultraviolet Lithography, 1996;

[**0024**] "Phase Shifting Diffraction Interferometry for Measuring Extreme Ultraviolet Optics", G. E. Sornargren, OSA TOPS on Extreme Ultraviolet Lithography, 1996; and

[**0025**] "EUV Optical Design for a 100 nm CD Imaging System", D. W. Sweeney, R Hudyma, H. N. Chapman, and D. Shafer, SPIE Volume 3331, pages 2-10

DETAILED DESCRIPTION OF THE PREFERRED EMBODIMENTS

[**0026**] A catadioptric projection system according to a preferred embodiment herein is schematically shown at **FIG. 1** and includes two distinct optical groups G**1** and G**2**. Group G**1** is a catadioptric group including mirrors M**1**-M**6** and lenses E**1**-E**3**, as shown in **FIG. 1**. An object or mask plane Ob is disposed to the left of group G**1** in **FIG. 1** or optically before group G**1**. Group G**2** is disposed optically after group G**1** and to the right of group G**1** in **FIG. 1**. An image or wafer plane Im is disposed optically after group G**2** and to the right of group G**2** in **FIG. 1**.

[**0027**] Group G**1** functions by correcting field aberrations and providing a conjugate stop position for correction of axial chromatic aberration. Group G**2** is a dioptric group including lens elements E**4**-E**13**, as also shown in **FIG. 1**. Group G**2** lies aft of G**1**, or optically nearer the image plane of the system, enabling the system to achieve numerical apertures in excess of 0.65, 0.70 and even 0.75. This catadioptric system achieves a high numerical aperture preferably using no beamsplitters nor fold mirrors. The description herein examines the performance of the preferred system of **FIG. 1**.

[**0028**] As mentioned, the system of **FIG. 1** is separated into two optical groups, i.e., group G**1** including 6 mirrors and 3 lens elements and group G**2** including 10 individual lens elements. The design is purely coaxial with a single common centerline (axis of symmetry) using an off-axis field to achieve the necessary ray clearance so that the mask and wafer planes are parallel, Group G**1** forms a virtual image V**1** located behind mirror M**6** at a reduction of ~0.8×. Group G**2** takes this virtual image and forms a usable real image at the wafer. Group G**2** takes this virtual image and forms a usable real image at the wafer. Group G**2** operates at a reduction of about 0.25×, allowing the system to achieve a desired reduction of 0.20×. A complete optical prescription is found in Table 2, below, describing the optical surfaces in Code V format.

[**0029**] Referring to **FIG. 1**, how the preferred design achieves the performance listed in Table 1 is now explained. To correct chromatic aberration, the aperture stop AS that lies in group G**2** has a conjugate position located within

group G1 preferably at, and alternatively near, mirror M2. At M2, strong negative lenses E2/B3 are used in a double-pass configuration for inducing overcorrected (positive) axial chromatic aberration used to balance or correct an under-corrected (negative) axial chromatic aberration created by the strong positive optical power of group G2. With regard to lateral chromatic aberration, **FIG. 1** shows an aperture stop AS in group G2 placed in a quasi-symmetric manner, allowing the Lateral chromatic aberration to be at least nearly self-corrected within group G2 itself. In practice, lateral chromatic aberration of a few parts per million (ppm) may be within tolerance within group G2 and can be corrected using slight asymmetry of the chief ray near the conjugate stop position at mirror M2.

[0030] By balancing aberration correction between G1 and G2, the monochromatic aberrations are corrected in such a way to leave the lens elements within G2"unstressed." The term "unstressed" is used to signify the fact that no steep ray bendings are used within G2 to promote high-order aberration correction. Both the chief and marginal rays exhibit this behavior. The fact that group G2 is "unstressed" is advantageous when manufacturing and assembly tolerances are considered in detail.

[0031] Overall, the system of **FIG. 1** includes 6 mirrors and 13 lens elements in a coaxial configuration all coaxial to axis A. The design utilizes an off-axis field to enable ray clearance and allow the mask and wafer planes to be parallel. Lens element E1 of group G1 is used to make the chief ray telecentric at the mask plane. Group G1 forms a virtual image behind mirror M6, which is relayed by the dioptric group G2 to form a final image at the wafer plane.

TABLE 1

System of FIG. 1 Performance Summary

Parameter	Performance
Wavelength (nm)	157
Spectral band (pm)	0.5
Reduction ratio (R)	0.20
Field size (mm)	22 × 7 rectangular
Numerical aperture (NA)	0.75
RMS wavefront error (waves)	0.013 λ
Distortion (nm)	<1 nm
PAC (ppm)	39.0 ppm
PLC (ppm)	0.0 ppm
Total track (mm) distance Ob - Im	1250
Front working distance (mm)	25.0
Back working distance (mm)	10.0
Blank mass (kg, estimated)	39.0

[0032] Table 1 shows that the monochromatic RMS wavefront error, distortion, and chromatic aberrations PAC—paraxial axial color aberration and PLC—paraxial local color aberration are reduced small residual values as desired for precision lithographic projection systems. Further, the system of **FIG. 1** may be confined within a volume that is similar to or smaller than conventional systems, meaning that the footprint of legacy tools can be maintained, if desired.

TABLE 2

Optical Design Prescription for the System of FIG. 1

	RDY	THI	RMD	GLA
OBJ:	INFINITY	25.000000		
1:	INFINITY	0.000000		
2:	INFINITY	0.000000		
3:	329.41693	30.000000		'cafl_vuv'
ASP:				
K : 0.722126				
A :0.000000E + 00 B :−.225942E − 11 C :0.167998E − 15 D :−.128550E − 20				
E :−.233823E − 24 F :0.685735E − 29 G :0.000000E + 00 H :0.000000E − 00				
4:	502.56918	59.208438		
5:	INFINITY	347.586957		
6:	−1183.47149	−347.586957	REFL	
ASP:				
K : 14.816567				
A :−.127089E − 08 B :0.812330E − 14 C :−.123118E − 18 D :0.894383E − 23				
E :−.276494E − 27 F :0.402755E − 32 C :0.000000E + 00 H :0.000000E + 00				
7:	279.62176	−7.500000		'cafl_vuv'
8:	745.02111	−5.835889		
9:	350.74458	−7.500000		'cafl_vuv'
10:	1226.35940	−8.372549		
11:	324.93068	8.372549	REFL	
ASP:				
K : 0.069031				
A :−.551054E − 09 B :−.166403E − 13 C :−.307699E − 18 D :0.277748E − 22				
E :−.680019E − 26 F :0.506026E − 30 G :0.000000E + 00 H :0.000000E + 00				
12:	1226.35940	7.500000		'cafl_vuv'
13:	350.74458	5.835889		
14:	745.02111	7.500000		'cafl_vuv'
15:	279.62176	304.397688		
16:	490.28038	−244.852865	REFL	
ASP:				
K : −1.803201				

TABLE 2-continued

Optical Design Prescription for the System of FIG. 1

	RDY	THI	RMD	GLA
	A :−.482804E − 08 B :−.128400E − 12 C :0.242635E − 17 D :−.680221E − 22			
	B :0.237919E − 26 F :−.315262E − 31 G :0.000000E + 00 H :0.000000E + 00			
17:	667.70113	565.726496	REFL	
	ASP:			
	K : −0.118347			
	A :−.275181E − 09 B :−.327224E − 14 C :0.200875E − 19 D :−.620470E − 24			
	B :0.627048E − 29 F :−.394543E − 34 G :0.000000E + 00 H :0.000000E + 00			
18:	INFINITY	25.997938		
	SLB: “Intermediate image”			
19:	−1126.18103	−178.682300	REFL	
	ASP:			
	K : 7.738777			
	A :−.668802E − 08 B :0.253685E − 12 C :−.548789E − 17 D :0.625386E − 22			
	E :−.276305E − 27 F :−.120188E − 33 G :0.000000E + 00 H :0.000000E + 00			
20:	−1002.36339	178.682300	REFL	
	ASP:			
	K : 50.616566			
	A :−.973184E − 08 B :0.308396E − 12 C :−.511443E − 16 D :0.428520E − 20			
	E :−.217208E − 24 F :0.51841SE − 29 G :0.000000E + 00 H :0.000000E + 00			
21:	INFINITY	−324.644232		
22:	INFINITY	324.644232		
	SLB: “Virtual image”			
23:	INFINITY	139.926509		
24:	532.50558	30.000000	‘cafl_vuv’	
	ASP:			
	K : −28.969955			
	A :0.000000E + 00 B :−.109172E − 11 C :0.625819E − 16 D :−.274325E − 20			
	E :0.634878E − 25 F :0.581549E − 29 G :0.000000E + 00 H :0.000000E + 00			
25:	−584.92060	2.500000		
26:	1292.88867	13.668481	‘cafl_vuv’	
27:	−1383.77341	2.500000		
28:	760.97648	15.674455	‘cafl_vuv’	
29:	−1077.75076	11.001421		
30:	−250.22566	10.000000	‘cafl_vuv’	
31:	−500.99843	11.138638		
STO:	INFINITY	22.619203		
	SLB: “stop”			
33:	−298.09900	18.822972	‘cafl_vuv’	
	ASP:			
	K : 6.689541			
	A :0.000000E + 00 B :0.346206E − 12 C :−.498302E − 17 D :0.272385E − 20			
	E :−.106617E − 24 F :0.175645E − 28 G :0.000000E + 00 H :0.000000E + 00			
34:	−1073.42340	0.500000		
35:	267.47103	50.000000	‘cafl_vuv’	
36:	−607.58973	0.592125		
37:	258.51826	27.182889	‘cafl_vuv’	
38:	−8945.70709	0.500000		
39:	159.70628	39.768717	‘cafl_vuv’	
	ASP:			
	K : −1.214880			
	A :0.000000E + 00 B :−.252828E − 11 C :−.632030E − 16 D :−.765024E − 21			
	E :0.477017E − 24 F :−.163970E − 28 G :0.000000E + 00 H :0.000000E + 00			
40:	−746.03878	0.500000		
41:	122.36092	43.154424	‘cafl_vuv’	
42:	95.77143	4.340799		
	ASP:			
	K : 1.012065			
	A :0.000000E + 00 B :0.214891E − 12 C :−.187071E − 14 D :−.681922E − 18			
	E :0.313376E − 22 F :0.000000E + 00 G :0.000000E + 00 H :0.000000E + 00			
43:	115.81595	30.082531	cafl_vuv	
44:	−1828.47137	9.930603		
IMG:	INFINITY	0.000000		

[0033] The catadioptric projection system according to a second preferred embodiment herein is schematically shown at **FIG. 2** and includes two distinct optical groups G1' and G2'. Group G1' is a catadioptric group including mirrors M1'-M6' and lenses E1'-E3', as shown in **FIG. 2**. An object or mask plane Ob' is disposed to the left of group G1' in **FIG. 2** or optically before Group G1'. Group G2' is disposed optically after group G1' and to the right of G1' in **FIG. 2**. An image or wafer plane Im' is disposed optically after group G2' and to the right of group G2' in **FIG. 2**.

[0034] Group G1' functions by correcting field aberrations and providing a conjugate stop CS' position for correction of

axial chromatic aberration. Group G2' is a dioptric group including lens elements E4'-E13', as also shown in **FIG. 2**. Group G2' lies aft of G1', or optically nearer the image plane Im' of the system, enabling the system to achieve numerical apertures in excess of 0.65, 0.70 and even 0.75. This catadioptric system achieves a high numerical aperture preferably using no beamsplitters nor fold mirrors. The description herein examines the performance of the second preferred embodiment of **FIG. 2**.

[**0035**] The first embodiment of **FIG. 1** features independent correction of lateral chromatic aberration in the individual imaging groups. This feature influenced the optical construction in terms of stop position(s), element powers and element shapes. In the present second embodiment, the independent lateral color correction feature is not included and a balance of lateral color is struck between the fore and aft groups.

[**0036**] Group G1' is a catadioptric group that functions by correcting field aberrations and providing a conjugate stop position to correct axial chromatic aberration. Group G2' is a dioptric group that lies aft of G1' enabling the system to achieve numerical apertures (NA) in excess of 0.65, and preferably at least 0.70, or 0.75, or even 0.80 or higher. For example, a system in accord with the preferred embodiment may be configured to exhibit a NA of 0.79 while advantageously having a RMS wavefront error of only 0.0115λ. That is, the system may be configured with a NA above 0.75, while maintaining the RMS wavefront error below 0.02λ, and even below 0.015λ.

[**0037**] The system shown in **FIG. 2** has two distinct groups, as mentioned above. Group G1' includes an even number of at least four mirrors, and preferably has six mirrors M1'-M6'. Group G1' further preferably includes three lens elements E1'-E3'. Group G2' includes a lens barrel of ten individual lens elements E4'-E13', as shown in **FIG. 2**. The design is coaxial having a single common centerline, respectively, of the system of two optical groups G1' and G2' shown in **FIG. 2**. The design uses an off-axis field to achieve ray clearances in group G1' Since Group G2' is dioptric, ray clearance problems are eliminated enabling a system with a high numerical aperture. The concept also provides for unlimited scanning of the mask and wafer in a parallel configuration.

[**0038**] Group G1' of **FIG. 2** forms a minified, virtual image V1' located behind mirror M6' at a reduction of ~0.8×. Group G2' relays this virtual image V1' to form a usable real image Im at the wafer. Group G2' operates at a reduction of about 0.25×. allowing the system to achieve a reduction of 0.20×. A complete optical prescription is found in Table 5 below, describing the optical surfaces in Code V format.

[**0039**] To correct chromatic aberration, the aperture stop AS' that lies in group G2' has a conjugate stop CS' position in group G1' between mirror M1' and M2'. This allows a negative chief ray height at elements E2' and E3' (for positive field height at the reticle (Ob')). This chief ray height, when combined with the sign of the marginal ray and the negative power of the E2'/E3' pair, provides for a lateral chromatic aberration contribution that substantially cancels the lateral color contribution from group G2'. Assuming a spectral bandwidth of 0.5 μm, this specific embodiment has a paraxial lateral color contribution from E2'/E3' of ~35 ppm, whereas the paraxial lateral color contribution from Group G2' is ~35 ppm, resulting in an advantageous sum total of approximately 0 ppm. The principle result is that the power distribution and shapes of the lenses in group G2' take on a very advantageous form.

[**0040**] **FIG. 2** also specifically shows raytrace layout of the preferred embodiment. The system shown includes six mirrors M1'-M6' and thirteen lens elements E1'-E3' in a coaxial configuration. The design utilizes an off-axis field (ring field, rectangular slit field or the like) to enable ray clearance and allow the mask and wafer planes Ob', Im' to be parallel. Element E1 is preferably used advantageously to make the chief ray telecentric at the mask plane Ob', as described in more detail below. Group G1' forms a virtual image V1' behind mirror M6', which is relayed by dioptric group G2' to form the final image at the wafer plane Im'. A real intermediate image Im' is also formed between mirrors M4' and M5' of group G1', as shown in **FIG. 2**.

[**0041**] At mirror M2', negative lenses E2'/E3' are used in a double-pass configuration to induce overcorrected (positive) axial chromatic aberration used to correct undercorrected (negative) axial chromatic aberration created by the strong positive optical power of group G2'. The monochromatic aberrations are corrected via a balance between groups G1' and G2'. In addition, this is done in such a manner as to leave the lens elements E4'-E13' in group G2'"unstressed" as in the first embodiment.

[**0042**] Lens element E1' provides for the telecentric condition at the plane Ob' of the mask. It is advantageous to have positive optical power near the mask to reduce the chief ray height on mirror M1'. Lens element E1' appears to lie in conflict with the substrate of mirror M2'. To achieve this concept, it is preferred that only a small off-axis section of E1' be used. This means that pieces of a complete E1' could be sectioned to yield pieces for multiple projection systems, further reducing the required blank mass of a single system.

[**0043**] Another option to resolve the apparent conflict between lens E1' and the substrate of mirror M2' is to place lens E1' between mirrors M1' and M2', such as somewhere close to the group of lens elements E2'/E3'. In this Manner, the complete lens would be used.

TABLE 3

Performance Summary of System of FIG. 2

Parameter	Performance
Wavelength (nm)	157
Spectral band (pm)	0.5
Reduction Ratio (R)	0.20
Field size (mm)	22 × 7
Numerical aperture (NA)	0.75
RMS wavefront error (waves)	0.006 λ
Distortion (nm)	<2 nm
PAC (ppm)	42.0 ppm
PLC (ppm)	0.7 ppm
Total track (mm)	1064
Front working distance (mm)	28.0
Back working distance (mn)	8.7
Blank mass (kg, estimated)	34.4

[0044] Table 3 summarizes design performance of the system of the preferred embodiment. The system has a composite RMS wavefront error of 0.006λ, with NA=0.75, evaluated monochromatically over the field. The distortion is less than 2 nm at all field points, and the lateral color PLC is corrected to better than 1 nm. The axial color PAC is also small and could be reduced further if desired and as understood by those spilled in the art. This design approaches an advantageous "zero aberration" condition.

TABLE 4

Composite RMS wavefront error vs. NA

NA	RMS wavefront error
0.75	0.0058 λ
0.76	0.0061 λ
0.77	0.0064 λ
0.78	0.0075 λ
0.79	0.0115 λ
0.80	0.0207 λ

TABLE 4-continued

Composite RMS wavefront error vs. NA

NA	RMS wavefront error
0.81	0.0383 λ
0.82	0.0680 λ

[0045] As desired dimensional specifications of IC manufactures shrink, the numerical aperture may be advantageously scaled in accord with the preferred embodiment. Table 3 illustrates how the design of **FIG. 1** may be scaled as the numerical aperture is increased. A local minimum that does not scale well with aperture is preferably avoided, since otherwise to achieve increased numerical aperture would involve additional redesign. The aperture scaling of the preferred embodiment illustrated at **FIG. 1** is presented in Table 3, above. From a qualitative standpoint, the table reveals that the preferred embodiment herein scales well with numerical aperture. For example, the composite RMS only grows by 0.005λ from 0.0058λ to 0.0115λ as the NA is scaled from 0.75 to 0.79. The results indicate that the system of the preferred embodiment my be scaled to a numerical aperture larger than 0.80.

TABLE 5

Optical Design Prescription of System of FIG. 2

	RDY	THI	RMD	GLA
OBJ:	INFINITY		28.000000	
1:	INFINITY		0.000000	
2:	INFINITY		0.000000	
3:	256.21415		19.957583	'cafl_vuv'
4:	461.83199		42.954933	
5:	INFINITY		329.408468	
6:	−947.39721		−329.408468	REFL
ASP:				
K : 10.217685				
A :−.271423E − 08 B :0.413774E − 13 C :0.119957E − 17 D :0.566939E − 22				
E :−.201485E − 26				
7:	235.67059		−5.250000	'cafl_vuv'
8:	1202.79595		−18.801014	
9:	199.92931		−5.250000	'cafl_vuv'
10:	471.74620		−10.153919	
11:	245.63551		10.153919	REFL
ASP:				
K : 0.060091				
A :0.624853E − 09 B :0.113020E − 13 C :−.515404E − 18 D :0.170604E − 21				
E :−.159226E − 25 F :0.105279E − 29				
12:	471.74620		5.250000	'cafl_vuv'
13:	199.92931		18.801014	
14:	1202.79595		5.250000	'cafl_vuv'
15:	235.67059		298.515259	
16:	490.36196		−227.868676	REFL
ASP:				
K : 0.133019				
A :−.401120E − 08 B :−.925737E − 13 C :−.236166E − 17 D :0.108790E − 21				
B :−.551175E − 26 F :0.127289E − 30				
17:	611.66355		331.489215	REFL
ASP:				
K : −0.837736				
A :0.918739E − 11 B :−.476080E − 14 C :0.346155E − 19 D :−.225369E − 23				
E :0.307373E − 28 F :−.248704E − 33				
18:	INFINITY		126.863525	

TABLE 5-continued

Optical Design Prescription of System of FIG. 2

	RDY	THI	RMD	GLA
19:	−561.20466		−126.090855	REFL
ASP:				
K : 2.976905				
A :−.154058E − 09 B :0.12575413 − 13 C :0.64783513 − 19 D :0.68438013 − 23				
E :−.112193E − 27 F :0.122096E − 32				
20:	−278.57130		126.090855	REFL
ASP:				
K : 8.694109				
A :−.172648E − 07 B: 0.129115E − 12 C: −.101751E − 15 D :0.402887E − 19				
E :−.610026E − 23 F :0.531569E − 27				
21:	INFINITY		−226.338582	
22:	INFINITY		226.338582	
23:	INFINITY		52.284606	
24:	729.88242		21.000000	‘cafl_vuv’
ASP:				
K : −31.969685				
A :0.000000E + 00 B :0.562441E − 11 C :0.152848E − 16 D :−.915976E − 20				
E :0.259148E − 24 F :0.238241E − 28				
25:	158.15364		17.296741	
26:	1355.83270		24.560562	‘cafl_vuv’
27:	−210.48464		0.700000	
28:	376.45149		23.959662	‘cafl_vuv’
29:	−356.27423		15.713419	
30:	−132.60708		38.500000	‘cafl_vuv’
31:	−152.06343		0.700000	
STO:	INFINITY		12.628192	
33:	−273.21370		38.500000	‘cafl_vuv’
ASP:				
K : 5.588882				
A :0.000000E + 00 B :0.113851E − 11 C :0.272852E − 16 D :0.288236E − 20				
B :0.101289E − 24 F :0.171576E − 28				
34:	−276.08617		0.700000	
35:	240.81764		38.500000	‘cafl_vuv’
36:	−48844.10806		11.186318	
37:	164.33601		38.500000	‘cafl_vuv’
38:	−2168.86405		2.528995	
39:	157.43497		38.500000	‘cafl_vuv’
ASP:				
K : −1.250301				
A :0.000000E + 00 B :−.532791E − 11 C :−.258778E − 15 D :−.139880E − 19				
E :0.252524E − 23 F :−.138502E − 28				
40:	29770.37524		2.727081	
41:	130.31599		33.479292	‘cafl_vuv’
42:	84.66735		3.097821	
ASP:				
K : 0.179565				
A :0.000000E + 00 B :0.129145E − 11 C :−.283430E − 14 D :−.650118E − 17				
E :0.238362E − 20				
43:	108.48722		20.284450	‘cafl_vuv’
44:	INFINITY		8.741020	
IMG:	INFINITY		0.000000	

SPECIFICATION DATA					
NAO	0.15000				
TEL					
DIM	MM				
WL	157.63	157.63	157.63		
REF	2				
WTW	1	1	1		
XOB	0.00000	0.00000	0.00000	0.00000	0.00000
YOB	66.50000	75.25000	84.00000	92.75000	101.50000
WTF	1.00000	1.00000	1.00000	1.00000	1.00000
VUY	0.00000	0.00000	0.00000	0.00000	0.00000
VLY	0.00000	0.00000	0.00000	0.00000	0.00000
REFRACTIVE INDICES					
GLASS CODE			157.63		
‘cafl_vuv’	1.559288				
No solves defined in system					
INFINITE CONJUGATES					
EFL	−21643.8522				
BFL	−4320.0292				
FFL	0.1082E + 06				
FNO	0.0000				

TABLE 5-continued

Optical Design Prescription of System of FIG. 2

	RDY	THI	RMD	GLA
AT USED CONJUGATES				
RED	−0.2000			
FNO	−0.6667			
OBJ DIS	28.0000			
TT	1064.0000			
IMG DIS	8.7410			
OAL	1027.2590			
PARAXIAL IMAGE				
HT	20.3000			
THI	8.7412			
ANG	0.0000			
ENTRANCE PUPIL				
DIA	0.3034E + 10			
THI	0.1000E + 11			
EXIT PUPIL				
DIA	6567.5310			
THI	−4320.0760			
SPECIFICATION DATA				
NAO	0.15000			
TEL				
DIM	MM			
WL	157.63			
REF	1			
WTW	1			
XOB	0.00000	0.00000	0.00000	0.00000
	0.00000	0.00000	0.00000	0.00000
YOB	100.00000	107.50000	115.00000	122.50000
	105.00000	110.00000	120.00000	125.00000
WTF	1.00000	1.00000	1.00000	1.00000
	1.00000	1.00000	1.00000	1.00000
VUY	0.00000	0.00000	0.00000	0.00000
	0.00000	0.00000	0.00000	0.00000
VLY	0.00000	0.00000	0.00000	0.00000
	0.00000	0.00000	0.00000	0.00000
REFRACTIVE INDICES				
GLASS CODE	157.63			
‘cafl_vuv’	1.559288			
No solves defined in system				
INFINITE CONJUGATES				
EFL	−521.5384			
BFL	−94.3531			
FFL	2582.5092			
FNO	0.0000			
AT USED CONJUGATES				
RED	−0.2000			
FNO	−0.6667			
OBJ DIS	25.0000			
TT	1249.8815			
IMG DIS	9.9306			
OAL	1214.9509			
PARAXIAL IMAGE				
HT	25.0018			
THI	9.9619			
ANG	0.0000			
ENTRANCE PUPIL				
DIA	0.3034E + 10			
THI	0.1000E + 11			
EXIT PUPIL				
DIA	158.2520			
THI	−94.3531			

[0046] The optical design description provided herein demonstrates an advantageous catadioptric projection system for DUV or VUV photolithography. While the preferred embodiment has been designed for use in an 157 nm tool, the basic concept has no wavelength limitations, either shorter or longer, providing a suitable refractive material exists. Some features of the preferred system herein are summarized below.

Configuration

[0047] The preferred optical system is catadioptric and includes two optical groups, group G1 and group G2, configured such that group G1 presents a reduced, virtual image to group G2. The function of group G2 is to relay this virtual image to a real image located at the plane of the wafer. Group G1 preferably includes an even number of at least four and preferably 4 or 6 mirrors in combination with

lens elements whose primary function is to provide telecentricity at the mask and enable correction of axial chromatic aberration. In the preferred embodiment, an image of the aperture stop is located in close proximity to mirror M2.

[0048] Group G2 is preferably entirely dioptric providing most of the system reduction and a corresponding high numerical aperture (in excess of 0.65, 0.70 and even 0.75) at the image. This group G2 also makes the final image telecentric in image space. Group G1 functions to correct high-order field aberrations, advantageously allowing a substantial relaxation of the lens elements found in group G2. Both group G1 and group G2 make use of aspheric surfaces as set forth in the Table 2. The same holds for the second preferred embodiment.

Symmetry

[0049] The preferred optical design herein is co-axial, wherein each of the optical elements is rotationally symmetric about a common centerline. The preferred system advantageously does not utilize fold mirrors, prisms, or beamsplitters to fold the opto-mechanical axis. This enables a compact configuration and eliminates substantial bulk refractive material that may be difficult to procure in a timely manner.

Parallel Scanning

[0050] The preferred optical system herein achieves mask and wafer planes that are parallel, enabling unlimited scanning in a step/scan lithographic configuration.

Correction of Chromatic Aberration

[0051] Correction of chromatic aberration is achieved preferably using a single optical material in the catadioptric configuration described herein. Lateral chromatic aberration is at least substantially self-corrected within group G2, using a balance of optical power on either side of a primary aperture stop located within group G2. Correction of axial chromatic aberration is enabled using a negative lens group E2/E3 located at mirror M2 in group G1, providing an axial chromatic aberration contribution that is nearly equal in magnitude and opposite in sign to the chromatic aberration generated by G2. This high level of axial chromatic aberration correction relaxes the need for a high spectral purity laser exposure source with linewidths on the order of 0.1 to 0.2 μm.

[0052] Some additional features of the preferred system herein are set forth below. The preferred system is an imaging system for photolithographic applications using 157 nm, 193 nm or 248 nm or other exposure radiation including first and second optical groups, or groups G1 and G2. The first optical group, i.e., group G1, is either a catoptric or catadioptric group including preferably six mirrors. Group G1 preferably also includes one or more lens elements, e.g., to make the chief ray telecentric at a mask plane and to correct axial chromatic aberration.

[0053] The second optical group, or Group G2, is a dioptric group of several lens elements for reducing and projecting an image to a wafer plane. Group G2 is preferably a relaxed group such that optical paths of projected rays are smoothly redirected at each lens element, e.g., less than 45° and preferably less than 30°, and still more preferably less than 20°, as shown in **FIG. 1**. This preferred system is contradistinct form a Dyson-type system which has one reflective component performing reduction of the image. In contrast to the Dyson-type system, the preferred system has a dioptric second group (group G2) performing reduction, while the catoptric or catadioptric first group (group G1) forms a virtual image for reduction by Group G2 and provides aberration compensation for group G2.

[0054] The first and second groups, or groups G1 and G2, respectively, of the preferred imaging system herein enable parallel scanning and a symmetric, coaxial optical design. Stops are located preferably at or near the second mirror M2 of Group G1 and within Group G2. The first stop may be alternatively moved off of the second mirror to enhance aberration correction.

[0055] Group G2 is preferably independently corrected for lateral color, while the refractive components of the first group compensate those of the second group far longitudinal color. Advantageously, 15 or fewer total lens elements are preferably included in the system, group G2 preferably having 10 or fewer lens elements. For example, the system of **FIG. 1** shows ten lens elements E4-E13 in group G2 and three additional lens elements in group G1.

[0056] The sixth or final mirror in group G1 may be preferably a convex mirror and preferably a virtual image is formed behind the sixth mirror. Group G2 forms a real image at the wafer plane.

[0057] When used with 157 nm exposure radiation, all of the refractive elements of the imaging system. e.g., lens elements E1-E13 of the preferred system of **FIG. 1**, are preferably made from a VUV transparent material such as CaF2. Alternatively, such materials as BaF2, SrF2, MgF2 or LiF may be used.

[0058] While exemplary drawings and specific embodiments of the present invention have been described and illustrated, it is to be understood that the scope of the present invention is not to be limited to the particular embodiments discussed. Thus, the embodiments shall be regarded as illustrative rather than restrictive, and it should be understood that variations may be made in those embodiments by workers skilled in the arts without departing form the scope of the present invention as set forth in the claims that follow, and equivalents thereof. In addition, the features of different claims set forth below may be combined in various ways in further accordance with the present invention.

What is claimed is:

1. A photolithographic reduction projection catadioptric objective with a beam path, comprising: a first optical group (G1) including an even number of at least four mirrors (M1-M6); and a second at least substantially dioptric optical group (G2) more imageward than said first optical group including a number of lenses (E4-E13), and wherein said first optical group (G1) provides compensative axial color correction for said second optical group (G2).

2. The objective of claim 1, wherein said image is formed with a numerical aperture of at least substantially 0.65 preferably 0.70 and more preferably 0.75 and more.

3. The objective of claim 1 or **2**, said first optical group producing an intermediate virtual image (VF).

4. The objective of claim 1, wherein said at least four mirrors (M1-M6) of said first optical group (G1) include a

convex mirror (M6) arranged most imageward in the beam path of the objective, and wherein said second optical group (G2) receives a beam from said convex mirror (M6).

5. The objective of claim 1, wherein optical surfaces of each mirror M1-M6 of said objective are at least sections of surfaces of revolution each having a common axis (A) of symmetry.

6. The objective of claim 1, wherein said second optical group is configured for independent compensative lateral aberrative correction.

7. A photolithographic reduction projection catadioptric objective, comprising: a first optical group (G1) including an even number of at least four mirrors (M1-M6) for producing a virtual intermediate image (V1); and a second at least substantially dioptric optical group (G2) more imageward than said first optical group (G1), said second optical group (G2) including a number of lenses (E4-E13) for receiving the virtual image (V1) and providing image reduction, and wherein said first optical group (G1) provides compensative axial color correction for said second optical group (G2).

8. The objective of claim 7, wherein said second optical group (G2) is configured for independent compensative lateral color correction.

9. A photolithographic reduction projection catadioptric objective, comprising: a first optical group (G1) including an even number of at least four mirrors (M1-M6) including a convex most imageward mirror (M6), and a second at least substantially dioptric optical group (G2) more imageward than said first optical group (G1) receiving a beam from the convex most imageward mirror (M6) of the first optical group (G1), said second optical group (G2) including a number of lenses (E4-E13) providing image reduction, and wherein said first optical group (G1) provides compensative axial color correction for said second optical group (G2).

10. The objective of claim 9, wherein said second optical group (G2) is configured for independent compensative lateral color correction.

11. A photolithographic reduction projection catadioptric objective, comprising: a first optical group (G1) including an even number of at least six mirrors (M1-M6); and a second at least substantially dioptric optical group more imageward than said first optical group (G1) including a number of lenses (E4-E13) for providing image reduction.

12. The objective of claim 11, wherein said image is formed with a numerical aperture of at least substantially 0.65, preferably 0.70 and more preferably 0.75 or more.

13. The objective of claim 11 or **12**, said first optical group (G1) producing an intermediate virtual image (VI).

14. The objective of claim 11, wherein said at least six mirrors (M1-M6) of said first optical group (G1) include a convex most imageward mirror (M6), and wherein said second optical group (G2) receives a beam from said convex most imageward mirror (M6).

15. The objective of claim 11, wherein optical surfaces of each mirror of said objective are at least sections of surfaces of revolution each having a common axis of symmetry (A).

16. The objective of claim 11, wherein said second optical group (G2) is configured for independent compensative lateral color correction.

17. The objective of claim 11, further comprising an unobscured system aperture (AS).

18. The objective of claim 17, wherein said unobscured aperture AS is located within said second optical group (G2).

19. The objective of claim 11, further being devoid of any planar folding mirrors.

20. The objective of claim 11, wherein an optical beam incident at said first optical group (G1) is divergent after a most imageward mirror (M6) of said first optical group (G1).

21. The objective of claim 11, which is further an unobscured system comprising parallel axes (A) of symmetry of curvatures of each optical element (M1-M6, E1-E13) of said first (G1) and second optical groups (G2), and wherein no more than three (M3, M4, M5) of said optical elements are cut to deviate in a substantially non-rotationally symmetric form.

22. The objective of claim 11, comprising in sequence, in an optical direction from an object (Ob) side of said objective before said first optical group (G1) to an image (Im) side of said objective after said second optical group (G2), a first catadioptric sub group (E1-M4) for producing a real intermediate image (IMI), a second sub group (M5, M6) including catoptric components for producing a virtual image (V1), and said second at least substantially dioptric group (G2) for producing a real image.

23. The objective of claim 11, comprising in sequence, in an optical direction from an object side of said objective before said first optical group (G1) to an image (Im) side of said objective after said second optical group (G2), a first field lens sub group (E1), a second catadioptric sub group comprising one or more negative lenses (E2, E3) and a concave mirror (M2), generating axial chromatic aberration, a third sub group including an odd number of catoptric components (M4, M5, M6), and a fourth positive lens group (G2).

24. The objective of claim 11, wherein said second optical group (G2) comprises a plurality of lenses (E4-E13), wherein a diameter of a beam incident upon each of said plurality of lenses is at least half of a diameter of said each lens (E4-E13).

25. The objective of claim 11, wherein said objective is doubly telecentric.

26. The objective of claim 11, wherein optical paths of projected rays are redirected at each lens element (E4-E13) of said second optical group at an angle of less than substantially **20°**.

* * * * *