US 20030197330A1

(19) **United States**

(12) **Patent Application Publication**

(10) **Pub. No.: US 2003/0197330 A1**

(43) **Pub. Date: Oct. 23, 2003**

Mathis

(54) **METHOD OF PLAYING CRAPS AND APPARATUS THEREFOR**

(76) Inventor: **Torrance Mathis**, New York, NY (US)

Correspondence Address:
Alfred F. Hoyte, Esq.
7734 16th Street, N.W.
Washington, DC 20012 (US)

(21) Appl. No.: **10/122,403**

(22) Filed: **Apr. 16, 2002**

Publication Classification

(51) **Int. Cl.**[7] **A63F 9/00**
(52) **U.S. Cl.** ..... **273/148 R**

(57) **ABSTRACT**

An apparatus and associated method which computes a betting strategy for a craps game based solely on the total amount the craps player wagers. The device comes in both a mechanical form and an electronic form. The mechanical form is configured to appear as a notepad in all respects and allows a player to select the total wager amount and provides instructions on which bets to place at selected areas of the craps table, and the suggested amounts. The electronic form is a microprocessor driven handheld device having a keypad to allow the bettor to manually enter the total amount to be wagered. A display driven by the microprocessor will have a plurality of fields corresponding to the areas of the craps table. In response to the entry of a valid total wager amount, numeric values are assigned to the various fields thereby informing the bettor of the suggested betting strategy

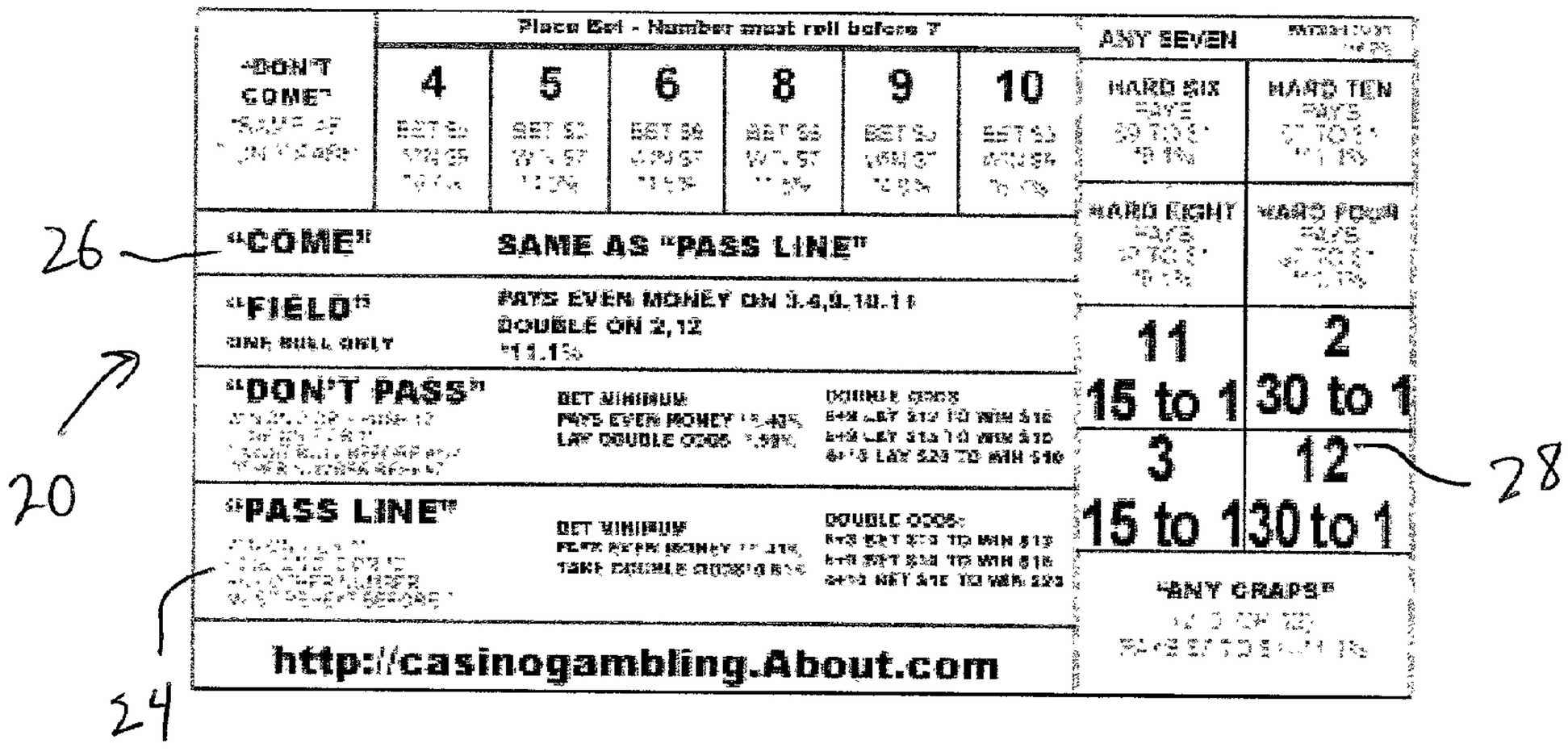

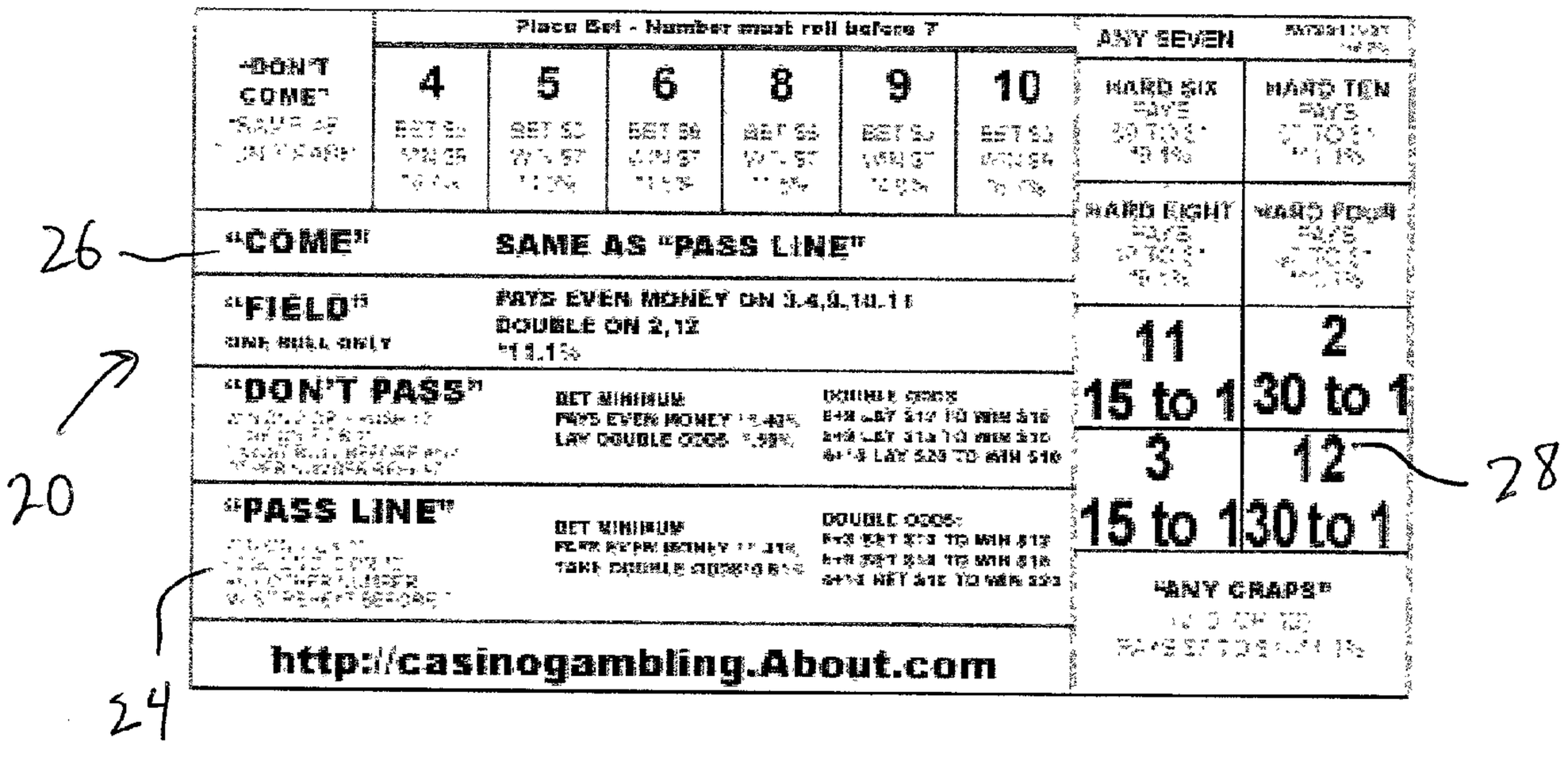
Craps Reference Chart
"DON'T COME"
Place Bet - Number must roll before 7
4
5
6
8
9
10
ANY SEVEN
HARD SIX
HARD TEN
"COME"
SAME AS "PASS LINE"
HARD EIGHT
"FIELD"
PAYS EVEN MONEY ON 3,4,9,10,11
DOUBLE ON 2,12
11
15 to 1
2
30 to 1
"DON'T PASS"
BET MINIMUM
3
15 to 1
12
30 to 1
"PASS LINE"
BET MINIMUM
"ANY CRAPS"
http://casinogambling.About.com
26
20
24
28

Fig. 1

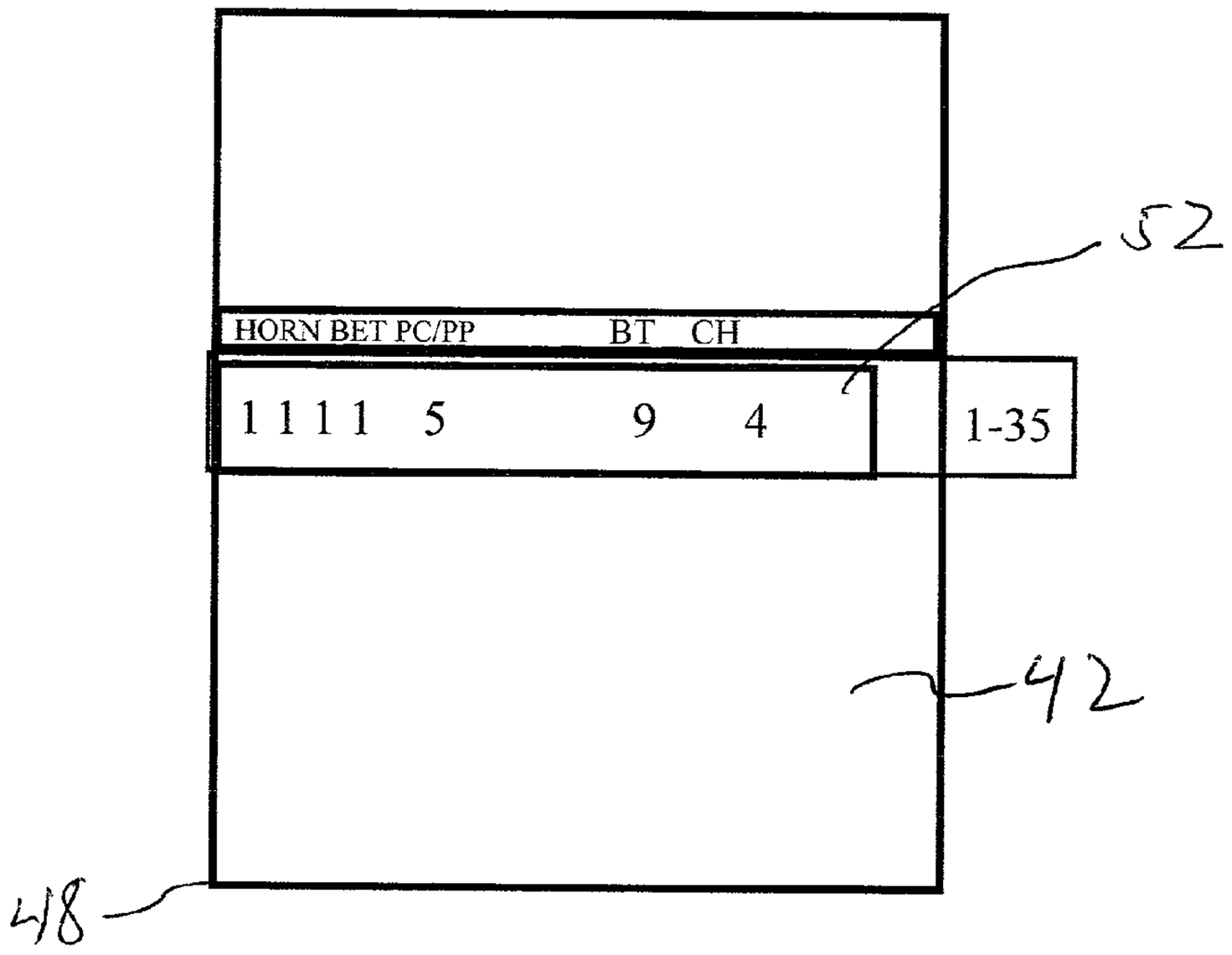
HORN BET PC/PP
BT CH
1 1 1 1 5
9 4
1-35
52
42
48

Fig. 2b

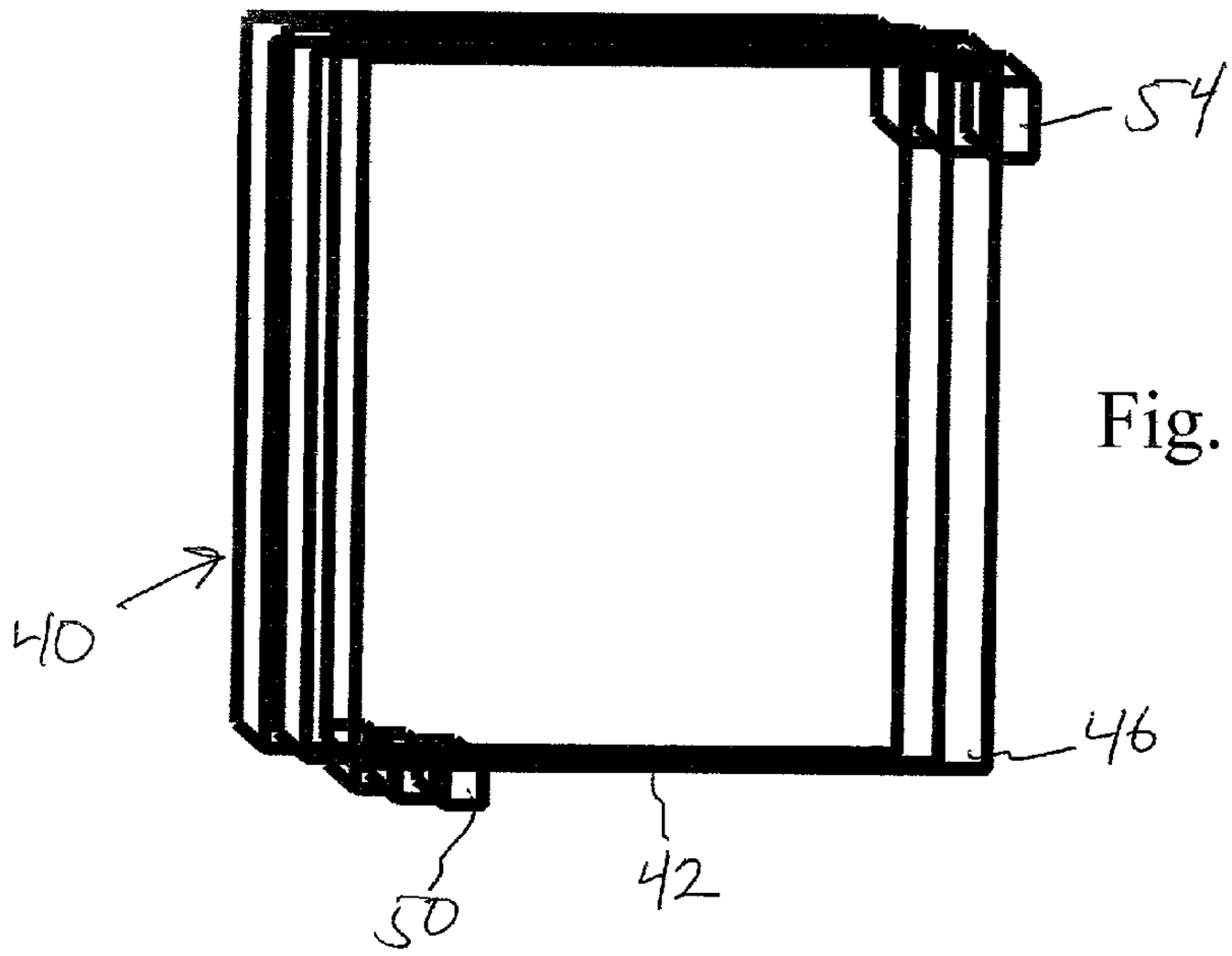
54
40
46
42
50

Fig. 2a

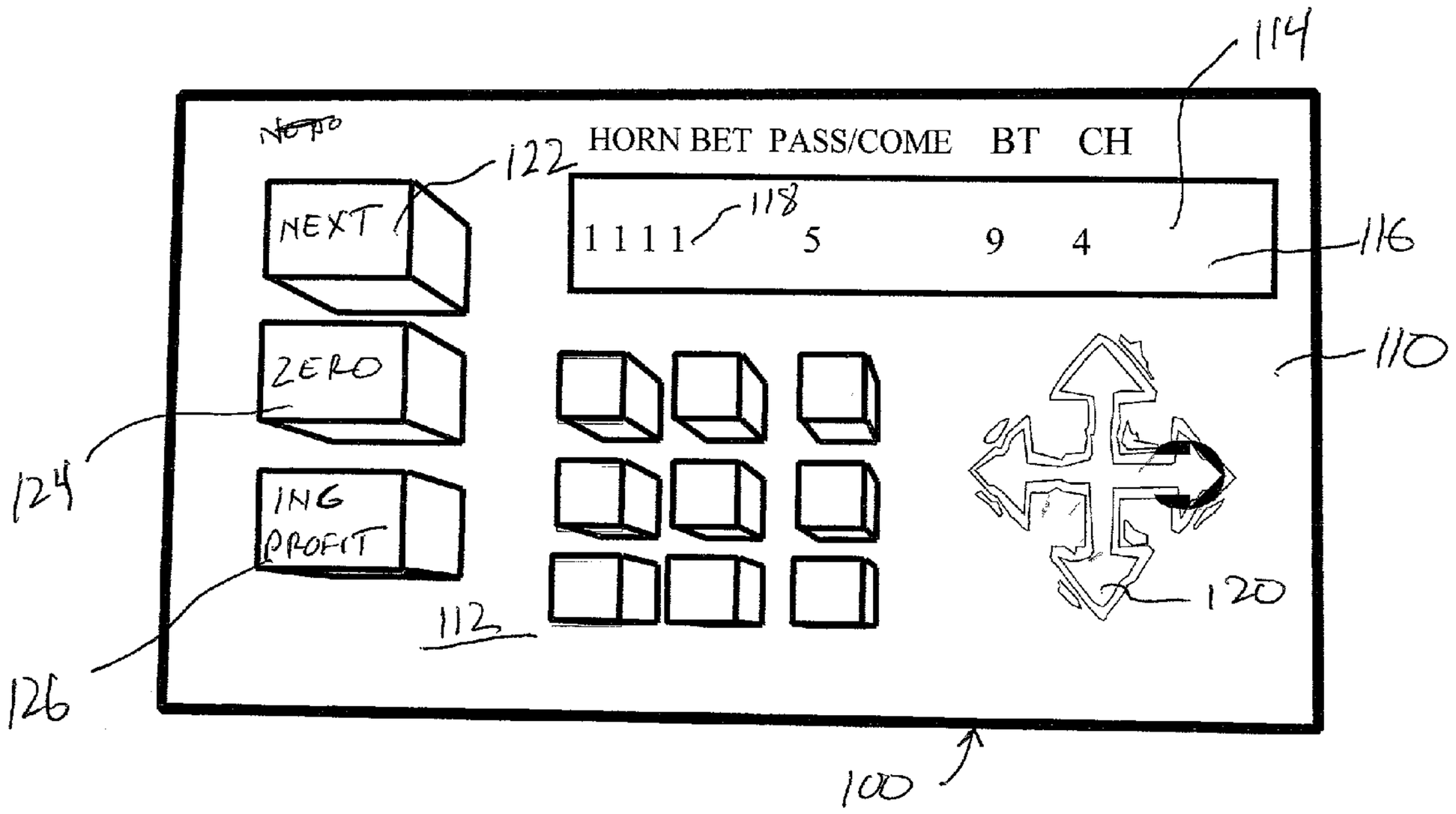
114
HORN BET PASS/COME BT CH
122
NEXT
118
1 1 1 1
5
9
4
116
110
ZERO
124
ING
PROFIT
126
112
120
100

Fig. 3

METHOD OF PLAYING CRAPS AND APPARATUS THEREFOR

BACKGROUND OF THE INVENTION

[0001] 1. Field of the Invention

[0002] The present invention concerns a method and associated apparatus for playing casino games. More particularly, the invention is directed to an apparatus for assisting a craps player, the apparatus incorporating a method which increases the odds of obtaining a winning payout.

[0003] 2. Description of the Prior Art

[0004] Gaming accessories and devices for assisting casino players are well known in the art of gaming devices. Most of these devices are characterized by the provision of a number system or algorithm, e.g., card counting for blackjack, the calculations for which are printed and contained in various forms within a handheld apparatus. Manipulation of the apparatus produces a series of numbers upon which a bettor may rely in order to increase his odds.

[0005] U.S. Pat. No. 6,131,906 issued to Green discloses a blackjack strategy calculator which utilizes well known card counting algorithms. The device uses a microprocessor to generate suggested play, with the suggestions made viewable on an associated display. The display may be visual or tactile and the entire device is small enough to be held discreetly or hidden by the bettor.

[0006] U.S. Pat. No. 4,266,770 issued to Yeager discloses yet another blackjack strategy calculator. The device relies solely on mechanical movements, which allow the suggested strategy to be made available to the user discreetly using a tactile output.

[0007] U.S. Pat. No. 5,762,334 issued to Kosi discloses a reminder system for craps players. The system records the number of rolls of the dice and reminds the bettor to bet only when predetermined criteria are met. The present invention differs from the prior art devices and methods in that it contemplates a device which provides a recommended strategy which does not rely upon statistics or percentages. Instead, the present invention provides a device which allows a craps player to enter the game at any time, and provides a betting strategy which ensures no losses are incurred regardless of the outcome of the series of rolls.

[0008] None of the above inventions and patents, taken either singly or in combination, is seen to describe the instant invention as claimed.

SUMMARY OF THE INVENTION

[0009] Briefly, the invention comprises an apparatus which computes a betting strategy for a craps game, where the bets are placed at amounts which are based solely on the total amount the craps player wagers. The device comes in both a mechanical form and an electronic form. The mechanical form is configured to appear as a notepad in all respects and simply allows a player to select the total wager amount and provides instructions on which bets to place at selected areas of the craps table, and the suggested amounts. The electronic form is a microprocessor driven handheld device having a keypad to allow the bettor to manually enter the total amount to be wagered, and provides betting instructions based on the outcome of the roll of the dice. A display driven by the microprocessor will have a plurality of fields corresponding to the areas of the craps table. In response to the entry of a valid total wager amount, numeric values are assigned to the various fields thereby informing the bettor of the suggested betting strategy.

[0010] Accordingly, it is a principal object of the invention to provide a new and improved gaming device which overcomes the disadvantages of the prior art in a simple but effective manner.

[0011] It is a major object of this invention to provide an improved gaming device which calculates a winning strategy for a craps player given a selected total wager amount.

[0012] It is another object to provide an improved gaming device which can provide a winning craps betting strategy as an output on a microprocessor driven display given a predetermined valid input.

[0013] It is another object to provide an improved gaming device which can provide a winning craps betting strategy on a selected page of a notepad, the notepad having an overlay to isolate a selected entry.

[0014] Finally, it is a general goal of the invention to provide improved elements and arrangements thereof in an apparatus for the purposes described which is inexpensive, dependable and fully effective in accomplishing its intended purposes.

[0015] These and other objects of the present invention will become readily apparent upon further review of the following specification and drawings.

[0016] The present invention meets or exceeds all the above objects and goals. Upon further study of the specification and appended claims, further objects and advantages of this invention will become apparent to those skilled in the art.

BRIEF DESCRIPTION OF THE DRAWINGS

[0017] Various other objects, features, and attendant advantages of the present invention will become more fully appreciated as the same becomes better understood when considered in conjunction with the accompanying drawings, in which like reference characters designate the same or similar parts throughout the several views, and wherein:

[0018] **FIG. 1** is a plan view illustrating the layout of a typical craps table.

[0019] **FIG. 2***a* is a perspective view of a mechanical apparatus formed in accordance with the concept of the present invention.

[0020] **FIG. 2***b* is plan view detailing the arrangement of a component of the apparatus of **FIG. 2***a*.

[0021] **FIG. 3** is a plan view illustrating the keypad and display of an electronic apparatus formed in accordance with concept of the present invention.

DETAILED DESCRIPTION OF THE PREFERRED EMBODIMENTS

[0022] Referring now to **FIG. 1 a** craps table layout is shown. There are a plurality of areas delineated on the craps table **20** where bettors can place bets. Bets are placed using chips which are purchased at predetermined incremental

values, the placement of the chips on one of the delineated areas indicating that the bettor desires to bet the corresponding dollar amount. The delineated areas allow bettors to place bets which, depending upon the outcome of each roll (known as the roll sum) of a pair of dice (not shown), either win, lose, or remain on the table **20** pending subsequent rolls. A winning bet will win an amount corresponding to the payout odds in light of the value of the chips placed in the selected area, a losing bet results in the loss of an amount corresponding to the value of the chips placed in the selected area. A bettor may place bets on several of the areas at once in order to increase his odds of winning for a given roll. However, odds of winning when placing bets on some areas of the table are far worse than on other areas of the table. For example, the odds on the proposition bets such as the horn bet are so heavily in favor of the casino (also known as the house) that almost all experts recommend against making any of the proposition bets.

[**0023**] The present invention provides a method and an apparatus which allows a user to systematically place bets on both the high risk and low risk areas with a substantially increased chance of winning. In accordance with the method, bets placed on the pass line **24** or the come area **26** (when appropriate) are balanced against bets placed on the horn **28**. For the initial bet placed on the pass line, a corresponding bet is placed on the horn area **28** in amounts calculated to ensure at least some winnings, with no possibility of a loss. For example, if the initial pass line bet is 5 dollars, the corresponding bet placed on the horn would be 1,1,1,1 on the roll sums of 2, 3, 11, and 12 respectively, as illustrated in **FIGS. 2 and 3**. If a point is rolled, i.e. a number other than 2, 3, 7, 11, or 12, the horn bet is lost, but the pass line bet remains on the board. If a 7 is rolled, the pass line bet is won, and the player nets one dollar. If a 2 or 12 is rolled the player loses the pass line bet, but wins the horn bet at a 30 to 1 payout and thus nets 30 minus 8(pass line bet plus losing horn bets), or 22 dollars. Similarly, if the player rolls a 3 roll sum, which has a 15 to 1 payout, the player loses the 5 dollar pass line bet but wins 15 dollars on the horn for a net winning of 7 dollars. If the player rolls an 11 roll sum the player wins the pass line bet and the horn bet (also 15 to 1 payout) for a total gross winnings of 15 plus 5 or 20 dollars. It should be noted, however, that the bets placed on the horn area **28** are single roll bets, that is, after every roll the bets are either taken by the house, or winnings are paid out in accordance with the predetermined payout ratio.

[**0024**] As can be easily discerned from the above discussion, in order to implement the method of the invention, the craps player must understand and keep track of several bets. Furthermore, bets must be placed relatively quickly, on the correct areas of the board and in the correct amounts. The present invention includes apparatuses which ensure that, once the craps player has familiarized himself with the rules of the game and the nuances of the method, he/she can implement the method efficiently.

[**0025**] Both the electronic and manual form of the inventive apparatus utilize the following terminology to describe the various bets which are placed.

1. Present horn bet(PH)	amount placed on the horn for the upcoming roll.
2. Cumulative horn bet(CH)	amount lost on all horn bets for a particular roll series.
3. Horn bet payout(HP)	amount won on the horn bet
4. Present come/pass bet(PC/PP)	amount placed on the come/pass for the upcoming roll
5. Roll series	all of the rolls occurring between a seven or an eleven roll sum.
6. Board total(BT)	total of all bets currently on the board, not including the current come/pass bet or the horn bets.
7. Seven out	a roll sum of seven which clears all bets on the board.

[**0026**] The basic principle of the method is that every current bet on the horn area **28** and the come or pass lines **24**, **26**, must be sufficient to cover for the cumulative horn bet as well as the board total, with at least a small net. Thus, for every roll, the amount placed on the come bet (the present come/pass bet) must be greater than the cumulative horn bet, plus the present horn bet, plus the board total. Likewise, for every roll, the horn bet payout (based on the current horn bet) must be greater than the cumulative horn bet, plus the board total. Thus we have:

$$PC > BT + CH + PH$$

and

$$HP > BT + CH + PC.$$

[**0027**] If the present come/pass bet PC/PH is won with a roll of seven, BT, CH, and PH are all lost, but since PC is greater than BT, CH, and PH combined, the player will enjoy a net gain. If the PC/PH is won with an 11, the player wins in accordance with the above, plus wins the horn bet. If the player rolls a craps, i.e., a 2, 3, or 12, the player will win the horn payout, which is greater than the board total, the cumulative horn bets, and the present pass line/come bet. If the player rolls a point, the player neither wins or loses, unless the point is a previously rolled point, in which case the player wins the amount bet on that point, which amount is then deducted from the BT. If the point rolled is not a previously rolled point, the PC/PP is added to the BT, so that the player can determine the bet amounts for the next roll. When a seven is rolled, the player may conveniently cease making bets, as the BT and PH will go to zero, and the payout from the PC/PP will generate a small net. At this point, the player will have no bets at risk. It is readily apparent, therefore, to one of ordinary skill in the art that various sequences of betting combinations are possible given the above mentioned constraints. Regardless of the exact number combination employed, the player must keep a running total of the above mentioned variables and then calculate bet amounts based on the totals, which is difficult, if not impossible, for the typical craps player.

[**0028**] Referring specifically now to **FIGS. 2 and 3**, apparatuses for implementing the method are shown. As previously stated, the average craps player cannot perform the necessary calculations and place the appropriate bets in a timely enough manner, as there is only a limited amount of time to place bets between rolls. For casino gambling,

craps players are not allowed to have any kind of mechanical or electrical device when gambling, but may have notes and figures. For internet gambling, the craps player can use whatever device he desires, as there is no visual supervision.

[0029] **FIGS. 2***a* and **2***b* show a modified note pad **40** which includes several sheets **42**, having rows and columns of numbers imprinted thereon. The numbers preferably appear to be handwritten, and serve to allow the player to determine the appropriate bets once the board total, cumulative horn, and present pass/come bets are known. The note pad **40** should have a number of replaceable blank sheets **46** upon which the player can calculate the board total, cumulative horn, and present pass/come bets. The blank sheets **46** are on op of the sheets having predetermined list of numbers thereon **42** so that the pad appears, at a glance, to have no numbers imprinted thereon. The blank sheets **46** are custom designed to be removably replaced so that replacements must be special ordered, to enhance customer loyalty. For example, the sheets **46** may be ruled and have an adhesive across the top. Alternatively, the sheets **46** may have pre-arranged punch holes formed Herein, using non-standard spacing. Each page **48** containing a list of numbers is tabbed, the tab **50** indicating the range of numbers on that page. The tabs **50** are at the bottom of the page. Indica indicating the bet to be placed, e.g., horn, pass line, etc. are on the sliding member **52** which may also have a range of numbers imprinted on extending tab member **54**.

TABLE I

BT + CH	PH	PC
Initial Bet: $5	1 1 1 1	n/a
$9	1 1 2 2	20
$35	4 4 8 8	65
$124	23 23 46 46	510

[0030] Referring now to Table I, an exemplary list of number sequences or roll formulas meeting the above mentioned criteria is shown. The player starts with the initial bet of 5 dollars on the pass line, and 1 each on the horn areas. If the player seven outs, he wins 1 dollar. If the player rolls any point, he will have lost 4 on the horn bet, and will have 5 on the board. Thus, in order for the next roll to net a profit, the roll will have to win more than 9 dollars, which covers the amount on the board (BT, 5 dollars) and the cumulative horn bet (CH, 4 dollars). The present horn bet PH (6 dollars) must also be covered by the present come bet for the next roll. Thus, the present come bet PC can be 20 dollars, as shown in line 2 of the list in Table I. The PH column of line 2 of Table I shows 2,2, 1,1, 20; corresponding to the bet amounts placed on the 2, 12, 11, and 3, areas of the horn (PH) plus the come bet (PC). It can be seen that the bets for the roll sums of 11 and 3 are exactly twice as high as the bets for the roll sums 12 and 2. These amounts reflect the fact that the payout odds are exactly double for the roll sums of 12 and 2, the objective being to ensure that exactly the same amount is won regardless of which of the horn bet roll sums is rolled. With these amounts, a horn bet win will result in a win of 30 dollars gross, less 3 dollars for the other horn bets, and 20 dollars for the present come bet (unless the horn is won with a roll sum of 11, in which case the 20 dollars placed on the come bet is won in addition to the 30 dollars won on the horn). Table T1 illustrates additional series of numbers or formulas which are consistent with the above mentioned constraints. It can be readily appreciated that the numbers can be varied, so long as the horn bet and the pass/come line bets are balanced as discussed above. In accordance with a preferred embodiment of the invention, a list of numbers having at least 200 entries is precalculated and printed onto the sheets **48** of the notepad, the numbers being made to look handwritten. With this scenario, the player does not have to calculate the actual bets to be made once the cumulative horn bet and board total is known. Since all casinos allow handwritten notes, the player will not look as if he/she is cheating when looking at the list to determine the appropriate bets. The player can keep track of the CH and BT on the blank sheets, the only calculations necessary being the incrementation of CH and BT, the number sequences having all other calculations presented for quick and easy access.

[0031] An electronic variation **100** of the inventive device, implementing the above discussed methodology is shown in **FIG. 3**. The device includes a housing **110**, having a keypad **112** and associated display **114**. The display **114** may be comprised of a plurality of LEDs, mounted behind a window **116**. The various bets are indicated by indicia **118** associated with the various areas located on the craps table **20** as discussed above. The keypad **112** includes a cursor which allows the bettor to enter numbers into each field. Microprocessor means (not shown) contained within the device **100** processes numbers entered via keypad **112** in accordance with the methodology of the invention. Alternatively, the keypad **112** may be simplified, and the device **100** pre-programmed to give the player sequences of betting combinations depending upon the total at risk (BT+CH), a desired profit margin for a given at risk total, or other criteria, continuing the progression until a seven is rolled, and restarting the progression when the bettor seven outs, or upon the occurrence of some other predetermined event. For example, the device operation may be further simplified by simply allowing the player to enter a starting pass line bet, and presenting the balancing horn bet on the display **114**. Thus, if the player enters a starting pass line bet of $5, the display will read as in line 1 of Table I. The player can continue to press a switch labeled, e.g., next **(122)**, until she seven outs, whereupon she can press zero **124**, and start over. Each time the player presses the next roll button, the display will be incremented as in Table I, which is based on an initial bet of $5, with a relatively small average profit. The player can increase the average profit by pressing the increase profit switch **126**, whereupon she will be prompted on display **114** to enter a desired average profit for the next few rolls, with perhaps the average profit for the previous few rolls or roll sessions being displayed for quick reference.

[0032] Alternatively, the device **100** may be programmed to allow the player to enter any BT+CH, and generate a roll formula as shown in Table I. Again, the player may decide what the average profit will be for a few rolls at a time. Also, the device **100** may be programmed to calculate a maximum or minimum horn bet for a given board total.

[0033] Finally, in lieu of the device **100**, software for use on a PC may be used to emulate the device display and keyboard, creating the appropriate screen overlays as would be apparent to one of skill in the art in view of the above discussion.

[0034] In use, a player can start at a nominal initial betting amount such as 5 dollars. The player then places chips on the

table in the amounts discussed above. If the player does not win the pass/come line bet, he may then total the chips on the board, add in the number of chips lost, and come up with a new total to be balanced which in this case would be 9 dollars. The player may use the replaceable blank sheets **46** to make the necessary calculations. Once the new total to be balanced is determined, the player then looks at the list, using tabs if necessary to get quickly to the correct page, and places bets accordingly. It should be noted that the numbers in table T1 allow a bettor to proceed sequentially, without making calculations, until a 7 or 11 roll sum is reached.

[**0035**] From the foregoing description, one skilled in the art can easily ascertain the essential characteristics of this invention and, without departing from the spirit and scope thereof, can make various changes and modifications of the invention to adapt it to various usages and conditions.

[**0036**] It is to be understood that the present invention is not limited to the sole embodiment described above, but encompasses any and all embodiments within the scope of the following claims:

I claim:

1. An apparatus for limiting betting losses while playing craps on a standard craps table, said craps table having a plurality of areas delineated thereon and predesignated for placing bets having predetermined odds based upon a roll of a pair of dice, said apparatus comprising:

a simulated notepad, said notepad having a plurality of sheets, each of said sheets having rows and columns of indicia thereon;

an alignment device slidably engaged with each of said sheets and shaped to allow visual isolation of a selected row of indicia;

whereby said indicia includes information useful for implementing a risk limiting betting strategy.

2. The apparatus of claim 1 wherein each of said rows of indicia correspond to dollar amounts of bets to be placed on respective ones of said predesignated areas.

3. A method for implementing a craps betting strategy on a standard craps table having predesignated areas for placing horn bets and pass/come line bets comprising:

determining the total amount wagered on previous pass/come line bets to compute a board bet total;

determining the total amount wagered on previous horn bets to compute a horn bet total;

adding the board bet total to the horn bet total to compute an at risk sum; and,

betting an amount on the horn bet which is greater than the at risk sum by a predetermined amount, and betting an amount the come bet which is greater than the at risk sum by a predetermined amount.

* * * * *