US 20030196970A1

(19) **United States**

(12) **Patent Application Publication**

(10) **Pub. No.: US 2003/0196970 A1**

(43) **Pub. Date: Oct. 23, 2003**

Jiang

(54) **CAROUSEL TYPE DISC CASE HOLDER**

(76) Inventor: **Peigen Jiang**, Sunnyvale, CA (US)

Correspondence Address:
Peigen Jiang
306 Portia Ave
Sunnyvale, CA 94086 (US)

(21) Appl. No.: **10/109,720**

(22) Filed: **Apr. 1, 2002**

Publication Classification

(51) **Int. Cl.**[7] **A47G 29/00**

(52) **U.S. Cl.** **211/40**; 211/41.12; 211/163

(57) **ABSTRACT**

A carousel type disc (compact disc—CD and/or digital versatile disc—DVD) holder comprising horizontally rotary panel with a cycle of spacers on top of it, which form a round of slots for keeping disc cases upright. Rotation allows easy access to every disc case. Since the standing CD/DVD cases form a cycle, the outer edges of the cases remain separated so that the cover of the cases are visible which eases the identification of individual disc case.

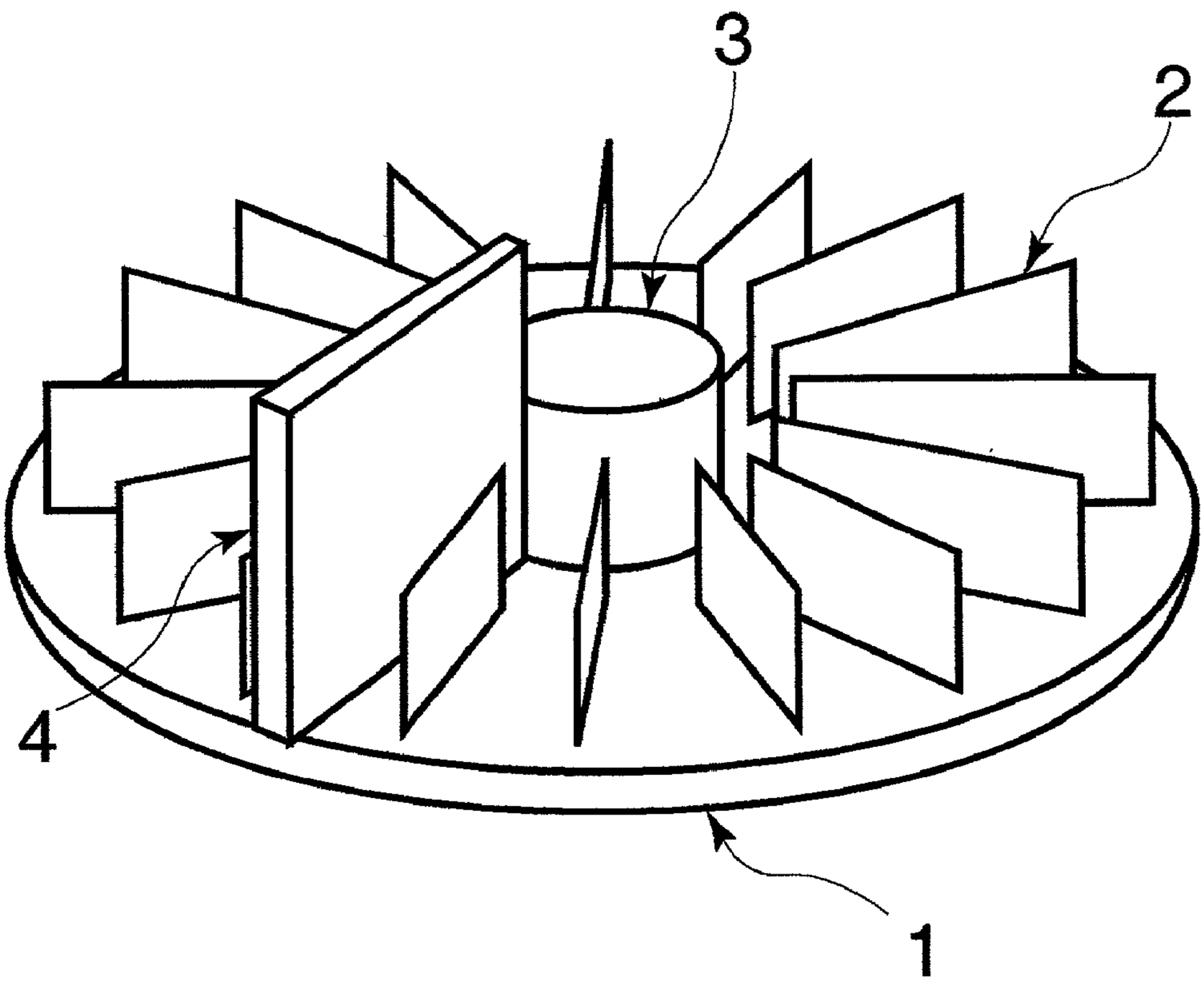

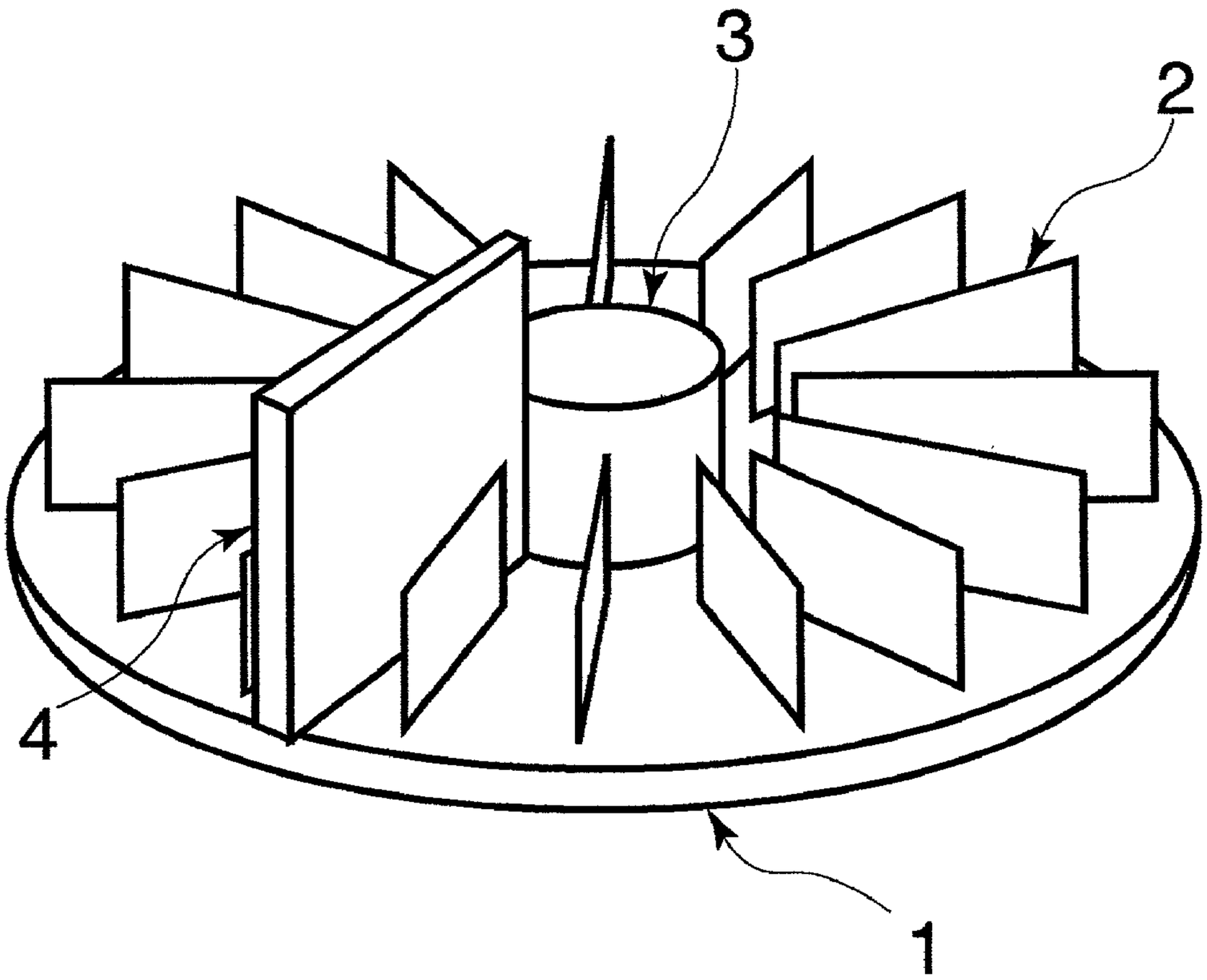

Fig. 1

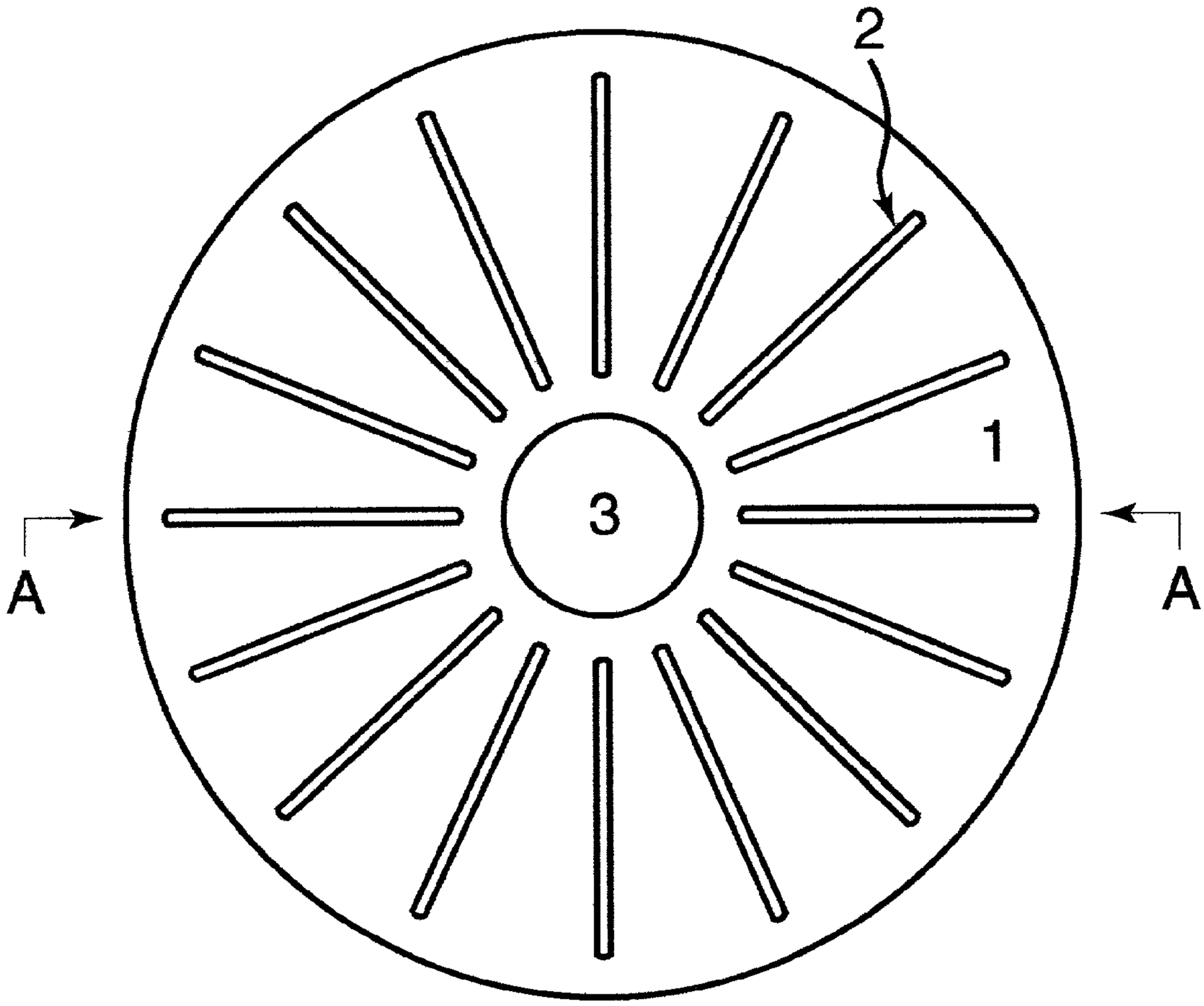

Fig. 2

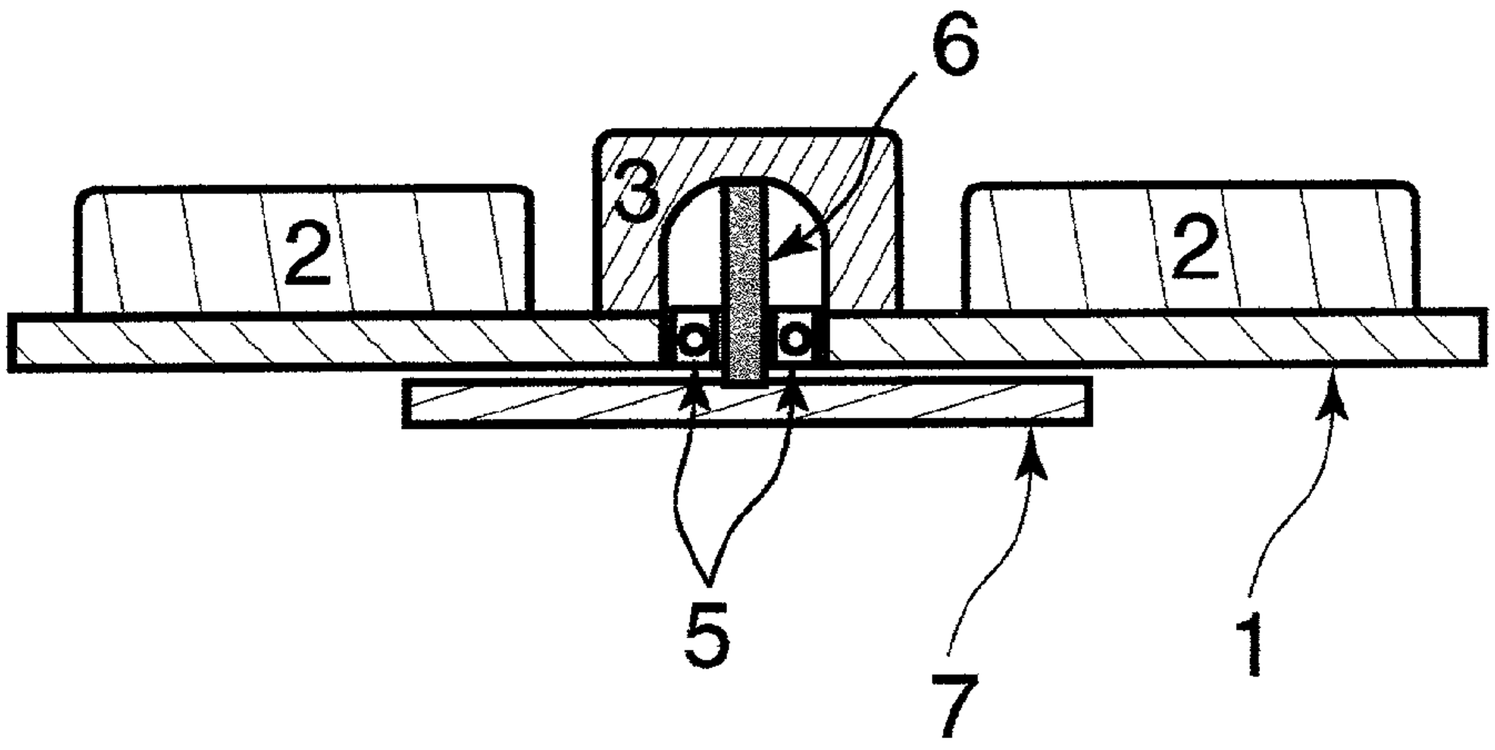

Fig. 3

CAROUSEL TYPE DISC CASE HOLDER

BACKGROUND OF THE INVENTION

[0001] (1) Field of the Invention

[0002] The present invention relates to a storage device for compact disc (CD) and/or digital versatile disc (DVD) cases.

[0003] (2) Description of the Prior Art

[0004] There are numerous commercial and prior art compact disc (CD) and/or digital versatile disc (DVD) case storage devices, and most of them hold CD/DVD cases in a linear fashion either laying them side by side or stacking one on top of the other. Such arrangement allows only one row of CD/DVD cases to be easily accessed, and not fit for those situations where the depth of the space is greater than that of two rows of CD/DVD cases. Also this type of storage becomes inconvenient when the user attempts to select a particular CD/DVD, since the user must read the fine print indicated upon the edge of the CD/DVD case.

SUMMARY OF THE INVENTION

[0005] Accordingly, the primary objective of the present invention is to provide a CD/DVD holder that utilizes the depth of the space, while allows easy access to every CD/DVD case contained therein.

[0006] Another objective of this invention is to allow the cover of the CD/DVD case to be visible which can help user to identify and select a particular disc.

[0007] These objectives are accomplished with the present invention by employing a horizontally rotary carousel with vertical spacers evenly placed around the circle to keep CD/DVD cases to stand upright. And since the standing CD/DVD cases form a circle, their outer edges remain separated, so that their covers are visible.

BRIEF DESCRIPTION OF THE DRAWINGS

[0008] **FIG. 1** is a perspective view of the CD/DVD storage device showing a CD case **4** is inserted between two spacers.

[0009] **FIG. 2** is the top view of **FIG. 1** without CD/DVD cases inserted.

[0010] **FIG. 3** is the cross-section view at A-A position of **FIG. 2**.

DETAILED DESCRIPTION OF THE PREFERRED EMBODIMENT

[0011] Referring to **FIG. 1, a** CD/DVD case holder is shown which consists of a round panel **1**, and multiple vertical spacers **2**. **FIG. 2** shows that the spacers are evenly placed around the circle, with narrowest space between each other larger than the thickness of standard CD/DVD case. The spacers **2** keep CD/DVD cases to stand upright. And since the standing discs form a cycle, to keep them evenly placed, there must be an angle between every two of them, and then the covers of the CD/DVD cases are visible.

[0012] The round panel **1** is then supported by a bearing means as shown in **FIG. 3**. The weight of the storage device is carried by a center pole **6**, which is vertically attached to a base **7**. The rotation of the round panel **1** is smoothed and guided by a ball bearing **5** fastened between the center pole **6** and the round panel **1**. A center column **3** extruded from the round panel **1** serves as a housing for the center pole **6** and ball bearing **5**, as well as a stop for CD/DVD cases to make them aligned to the edge of the round panel **1**.

What is claimed is

1. A carousel type holder for compact disc (CD) and/or digital versatile disc (DVD) cases comprising:

a) a horizontally rotary round panel,

b) multiple spacers vertically extruded from the top of the said panel to divide it into a round of slots for holding CD/DVD cases.

c) bearing means attached to the bottom of the said panel to allow it to rotate smoothly.

* * * * *