US 20030196929A1

(19) **United States**

(12) **Patent Application Publication**

Gopinathan

(10) **Pub. No.: US 2003/0196929 A1**

(43) **Pub. Date: Oct. 23, 2003**

(54) **PHARMACEUTICAL KIT FOR MIGRAINE HEADACHE TREATMENT**

(76) Inventor: **Govindan Gopinathan**, Oradell, NJ (US)

Correspondence Address:
Philip Braginsky
Scully, Scott, Murphy & Presser
400 Garden City Plaza
Garden City, NY 11530 (US)

(21) Appl. No.: **10/125,821**

(22) Filed: **Apr. 19, 2002**

Publication Classification

(51) **Int. Cl.**[7] **B65D 69/00**; B65D 71/00

(52) **U.S. Cl.** **206/570**

(57) **ABSTRACT**

A pharmaceutical kit for treating migraine headaches and method of preparing the kit that includes a therapeutically effective dosage of pharmaceutical compounds used in the treatment of migraine headache. The pharmaceutical kit is manufactured with a predetermined number of dosage units of migraine treating pharmaceutical compounds. Additionally the kit provides all components necessary for the administering of the drugs in a safe and convenient manner. An aspect of the pharmaceutical kit may include injections and nasal sprays that are fast acting for relief of the migraine sufferer. A preferred pharmaceutical kit with only oral dosage units of drugs may be provided as an attachment to a water bottle.

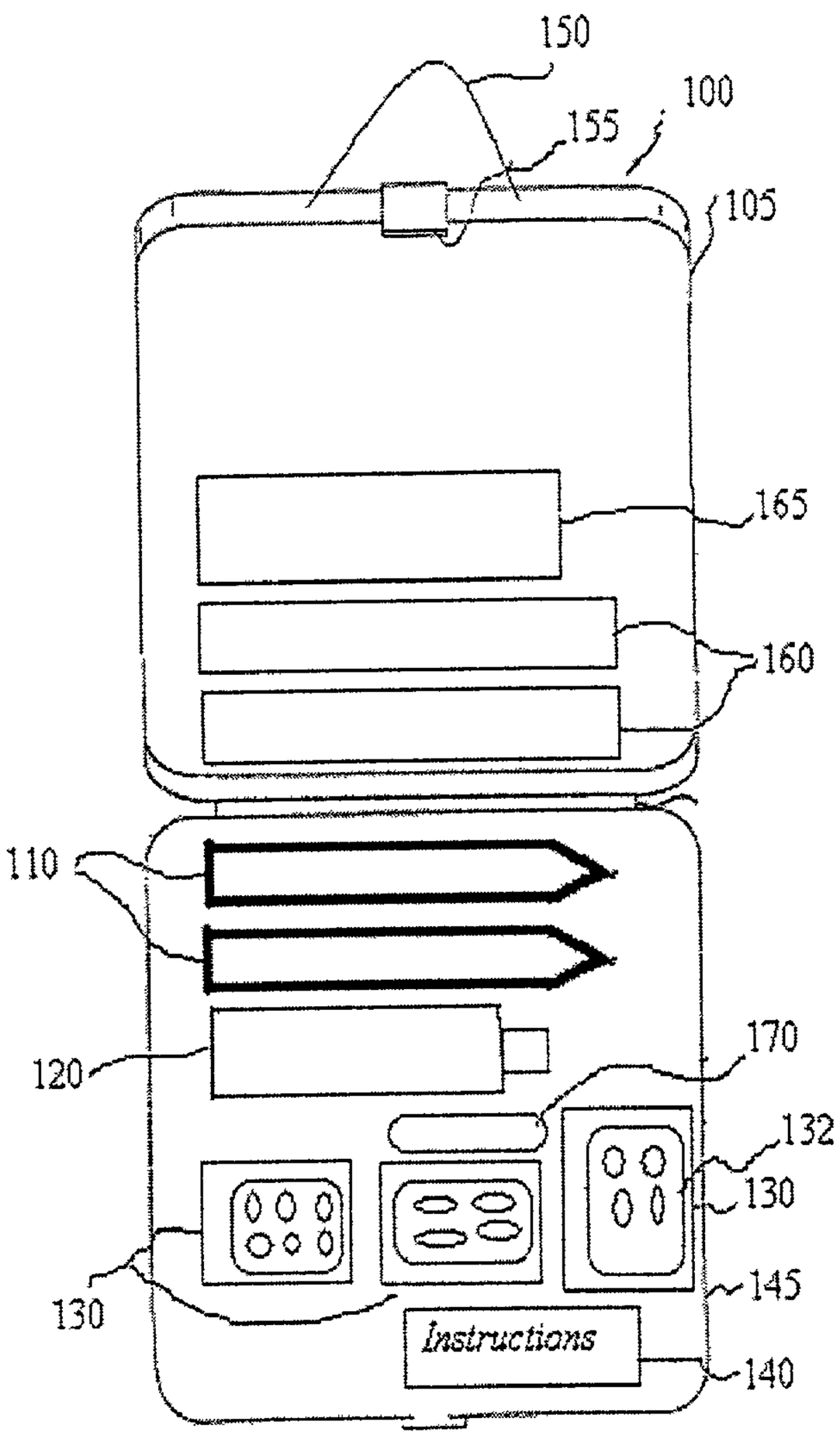

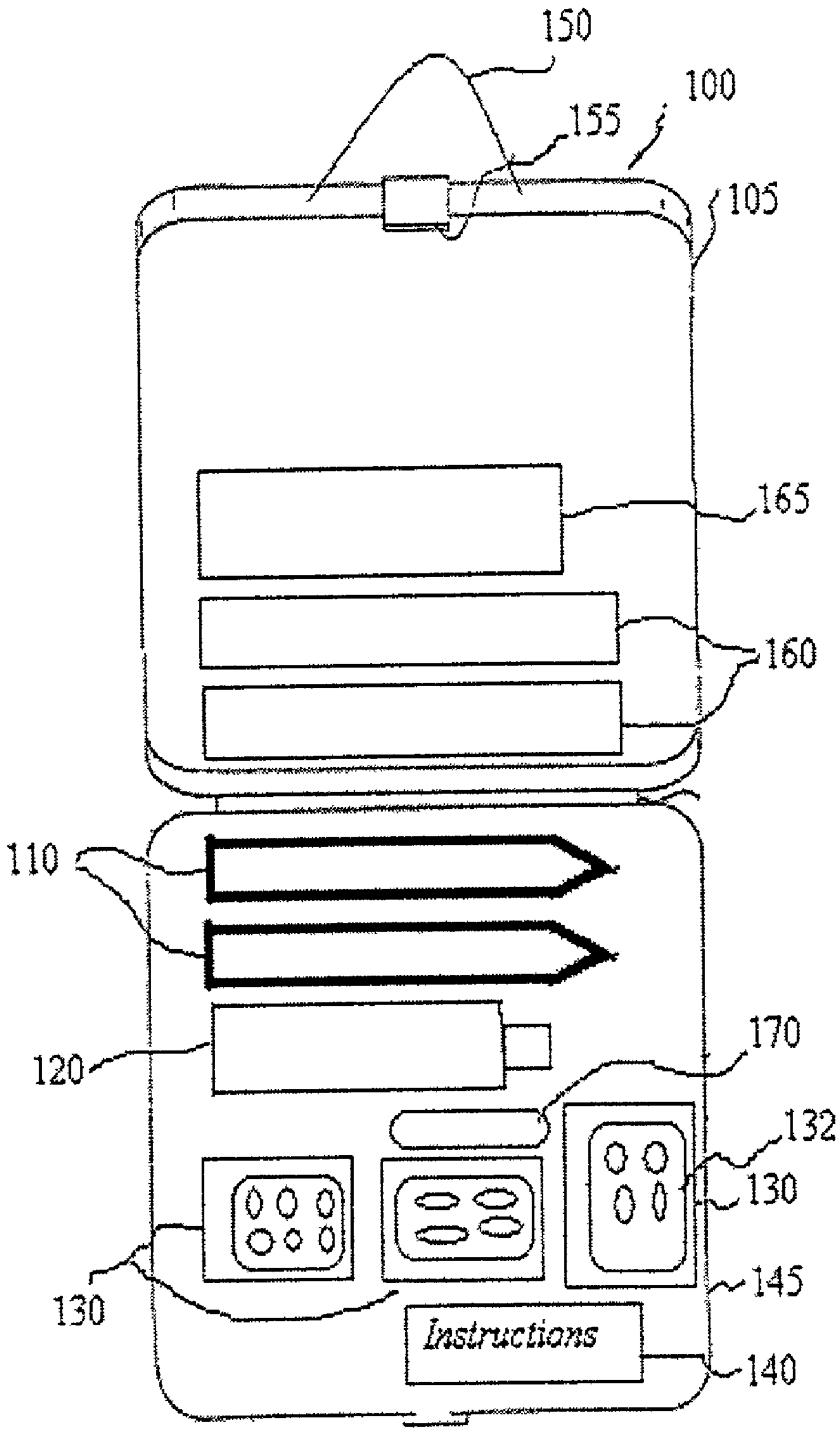
150
100
155
105
165
160
110
120
170
132
130
130
145
Instructions
140

Fig. 1

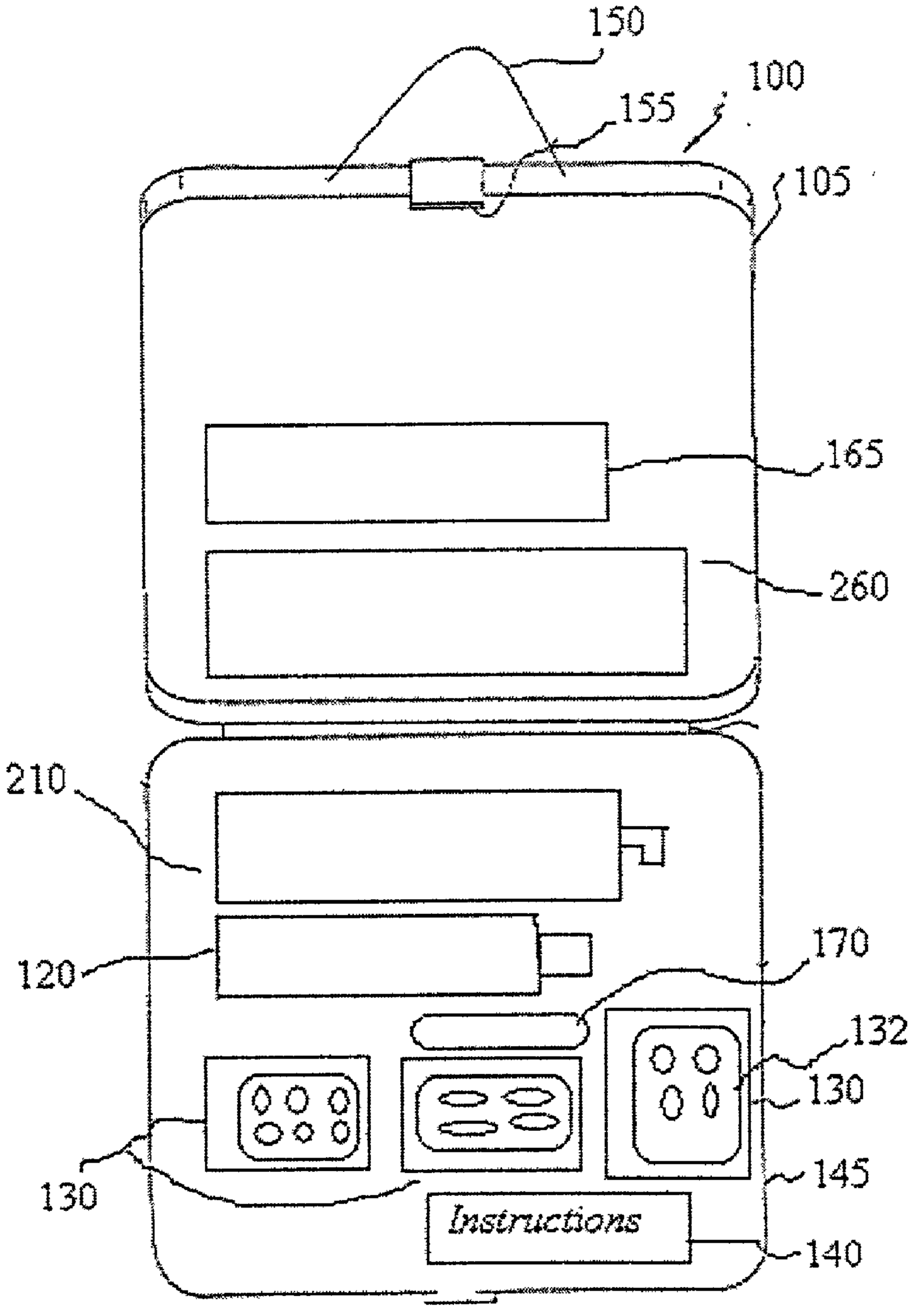
150
155
100
105
165
260
210
120
170
132
130
130
145
Instructions
140

Fig. 2

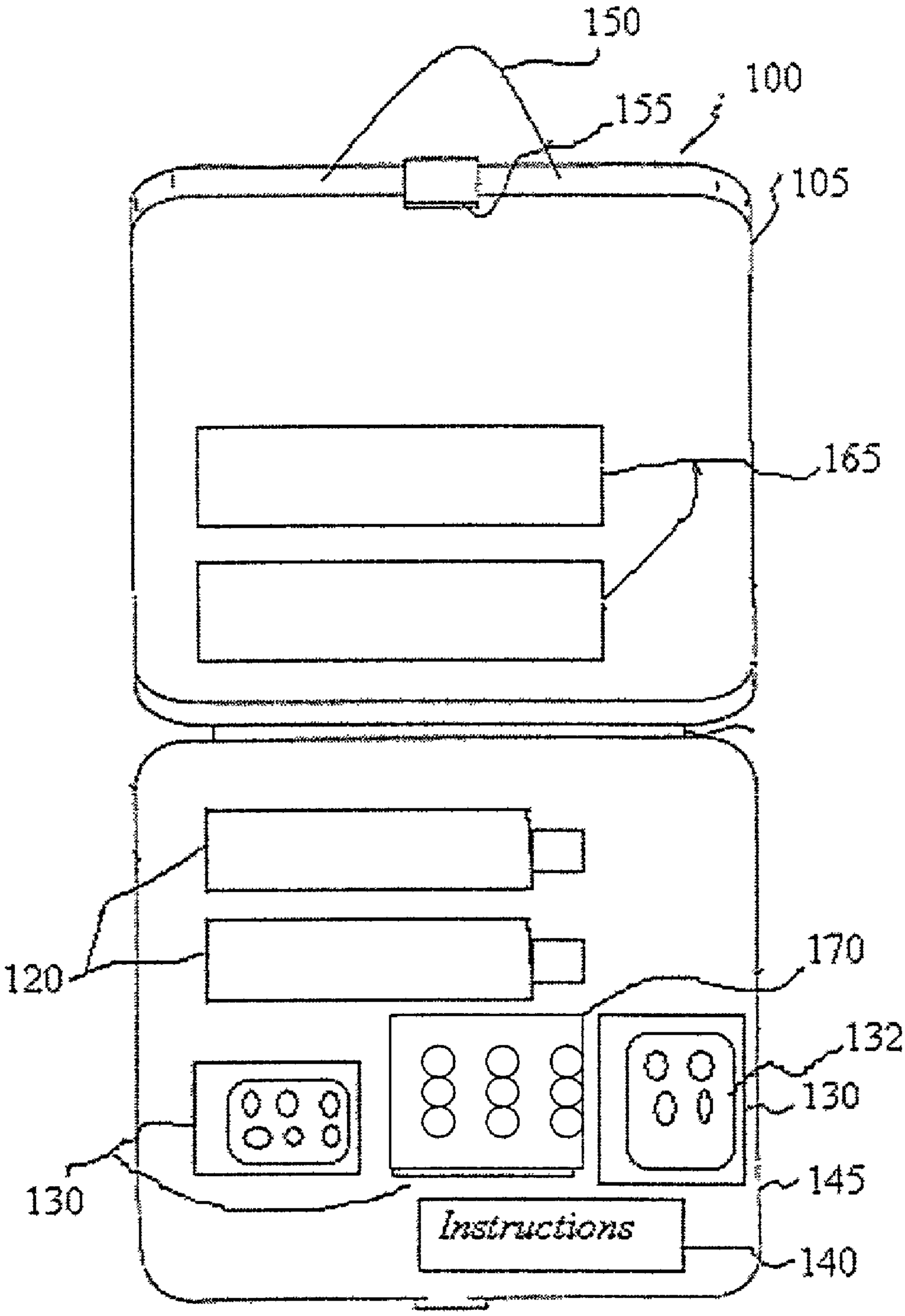

Fig. 3

Fig. 4a

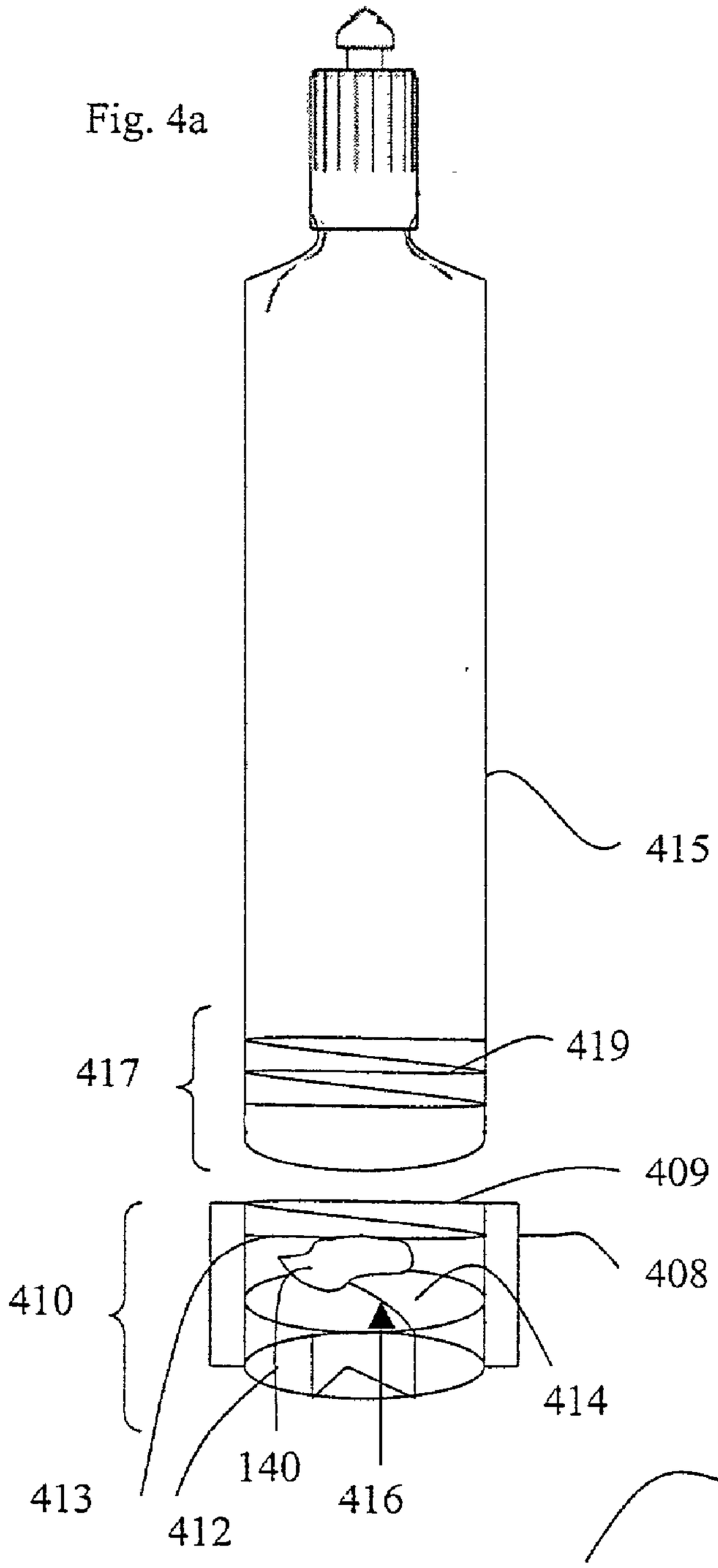

Fig. 4b

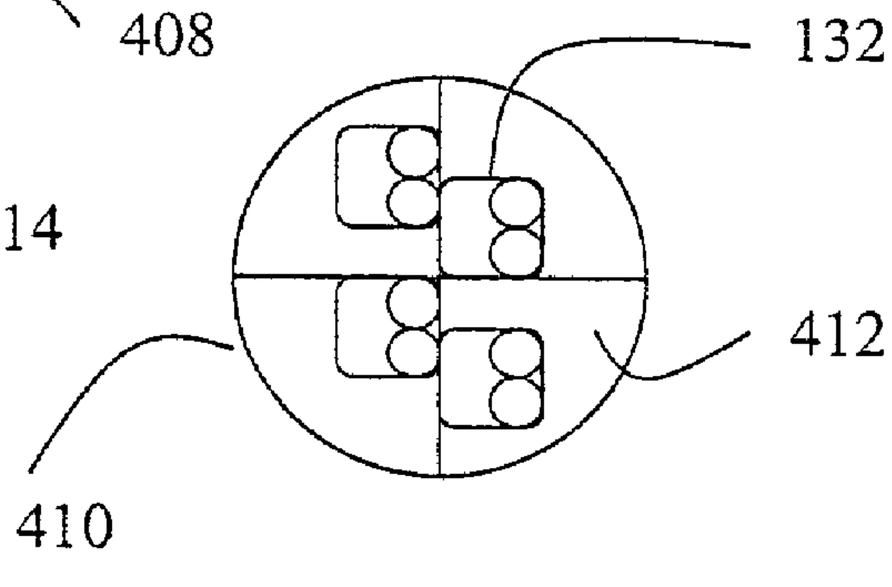

Fig. 4c

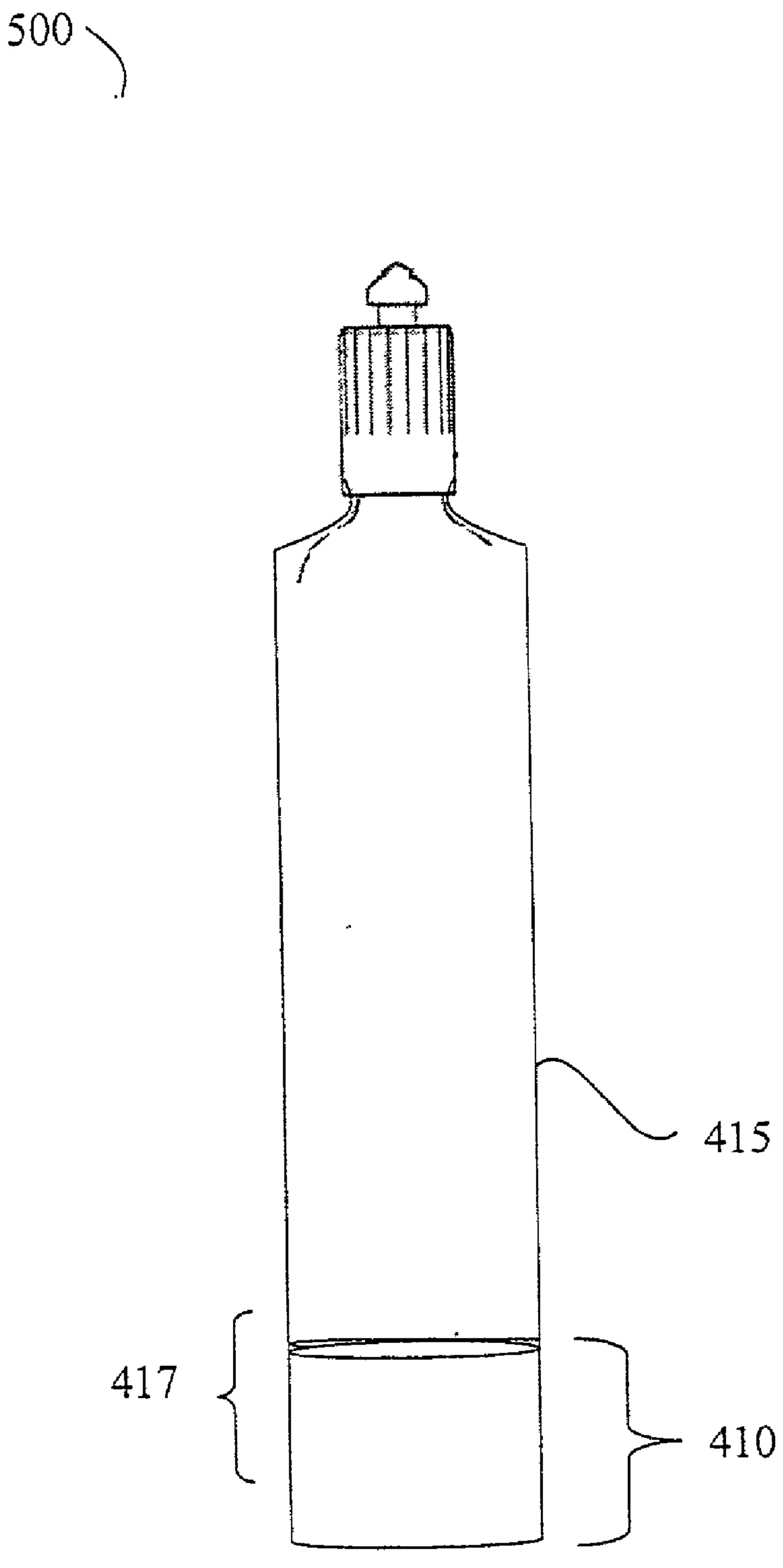

Fig. 5

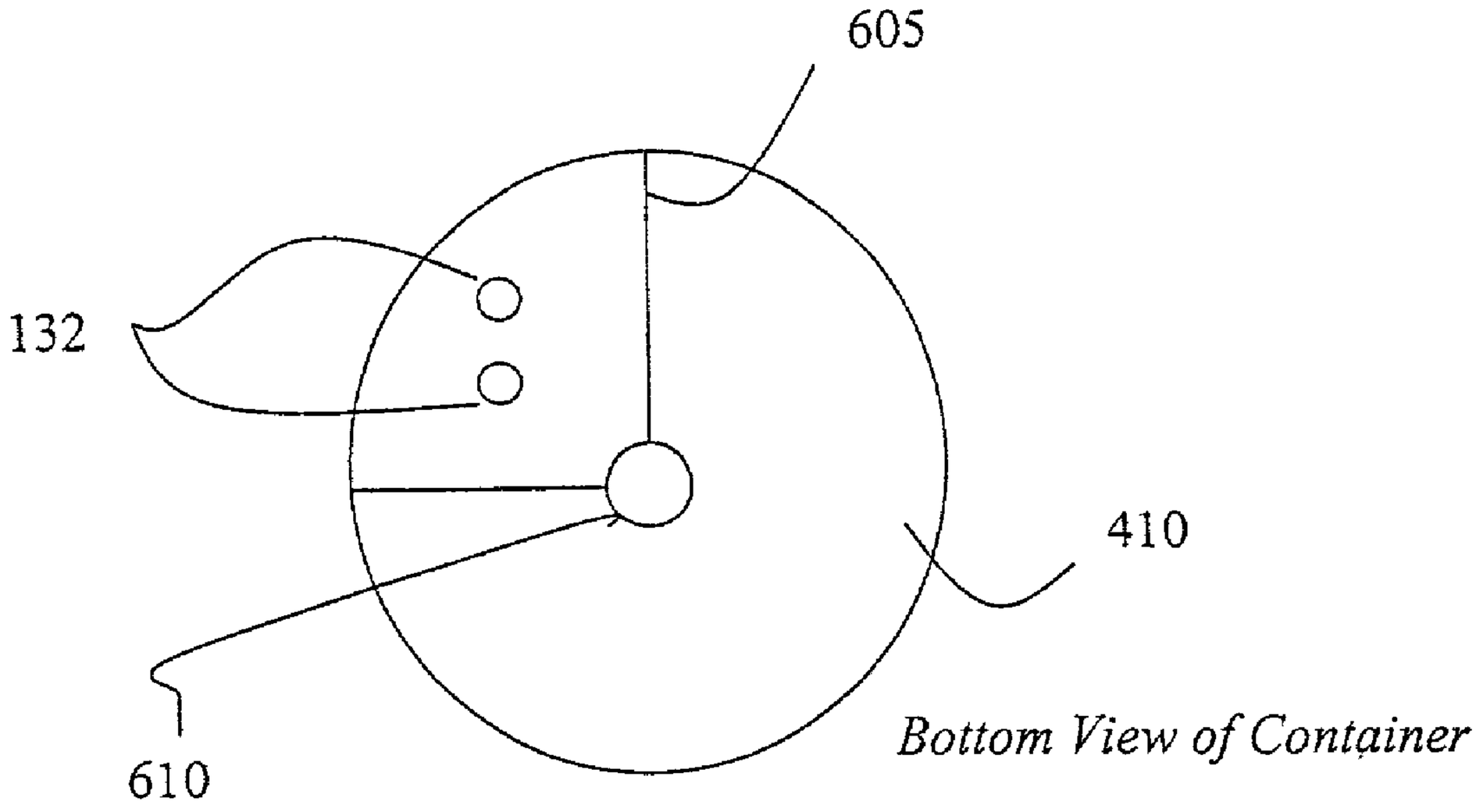

Fig. 6

PHARMACEUTICAL KIT FOR MIGRAINE HEADACHE TREATMENT

FIELD OF INVENTION

[0001] The present invention broadly relates to a pharmaceutical kit and method of packaging the kit for treating migraine headaches.

BACKGROUND

[0002] Migraine is an age old disease which has been described and dealt with in various ways throughout history by many cultures and civilization. For example, old English literature described migraine as "Hemicrania", implying that migraine headache is unilateral in the head. However migraine does not always attack in a unilateral manner. It took several centuries to understand the scientific basis and recognize the wide clinical spectrum of this very common illness.

[0003] As of recent times, in the United States alone, there are 28 million people suffering from migraine. Of that population, approximately 21 million are female and 7 million are male. One in four households has at least one migraine sufferer. Migraine prevalence peaks in the 25 to 55 year age ranges in both genders. In the 1999 HIS (International Headache Society) estimate, 52% of the total population of migraine cases remain undiagnosed. The undiagnosed sufferers are most likely self-medicating with over the counter medications. "Migraine Awareness", i.e., public knowledge of migraine illness, is much more prevalent in the urban areas than in the interior heartland of the United States, for example.

[0004] Additionally, migraine is the number one cause of lost work days. Migraine sufferers visit emergency rooms and doctor's offices more frequently than non-migraine patients. The total cost of lost work in the United States alone is approximately in the range of 5.6 to 17.2 billion dollars a year. Attendant health care costs rival these figures.

[0005] Despite tremendous economic pressures to develop a "magic bullet" style treatment useful in treating the full range of the illness, no manufacturer has done so. For example, a most popular migraine remedy, Sumatriptan, has been used to treat around 140 million cases. However this drug addresses just one aspect of the complex migraine illness. Subjects who are being treated with Sumatriptan most likely take other drugs, over the counter or prescription, to treat aspects of the disease that Sumatriptan does not address. There remains a need for a more convenient approach to complete migraine treatment wherein all of the components and medications necessary for migraine treatment are provided.

[0006] The pathogenesis of migraine may be summarized by:

[0007] (1) genetic pre-disposition (Almost 90% of migraine sufferers have a family history of the illness);

[0008] (2) Environmental factors such as food, atmospheric and climatic changes, emotional upheavals, physical stress, sleep deprivation, and social aggravations; and

[0009] (3) The "cascade phenomenon of migraine", i.e., neuro-chemical changes occurring in the brain.

[0010] The most important chemical change in the brain in migraine is the decline in the level of the neurotransmitter serotonin. All modern treatment methods to treat migraine attacks use a generic group of drugs called Triptans. Triptans work by elevating the brain serotonin levels through action at the nerve junctions, i.e., synapses. This triggering event results in the release of a variety of other neuro-peptides and mono-amines around the blood vessels in the meninges, i.e., covering of the brain, and in the brain itself. Some of these important neuro-peptides are bradykinin, prostaglandin. A few of the important mono-amines are dopamine and norepinephrine. Their roles are described in further detail below.

[0011] Migraine is a complex illness in which not only serotonin, but other neuro-peptides are implicated. The acute aseptic, i.e., non-infectious, inflammatory reaction of the meninges which causes the severe headache is mediated through the release of a chemical, prostaglandin. Thus, the common anti-inflammatory drugs like Aspirin, Tylenol, Ibuprofen, Alleve etc. are effective in treating the severe headache in migraine attacks because these drugs antagonize prostaglandins.

[0012] During a migraine attack, there is a release of norepinephrin which accounts for the sense of anxiety, palpitation and high blood pressure in the migraine sufferer. Anxiety relieving drugs like Valium, Xanax and Paxil are often useful in treating migraine.

[0013] Release of another important chemical substance called dopamine explains the nausea and vomiting and the tremendous mood swings in migraine. Reglan (Chlorpropomide) is a dopamine blocking agent and hence is successfully used in the acute stages of migraine to treat accompanying symptoms other than the headache, such as nausea and mood swings.

[0014] The drug manufacturers typically put out one single product in the market and promote it studiously. There are four different Triptan preparations already being marketed and several more are expected soon. However, as mentioned above, a "single drug" approach using Triptan, for example, cannot treat migraine adequately.

[0015] A well experienced migraine doctor skillfully prescribes a combination of drugs to treat acute migraine. Under current state of the art, depending upon the presenting manifestation of a migraine attack, the migraine doctor may prescribe a Triptan, e.g., Imitrex, an anti-prostaglandin drug, e.g., Ibuprofen and an anti-dopamine drug, e.g., Reglan, . Patients, very often, use this "cocktail" approach on their own. Surprisingly, it is not at all uncommon to find doctors prescribing only single drug treatment for migraine, which leaves the patient only with partial relief of headache, leaving them unhappy and seeking other opinions. As described above, to successfully treat a migraine attack, there exists the need to use a combination of several drugs. Yet, no manufacturer has assembled a kit with such a combination.

SUMMARY OF THE INVENTION

[0016] This invention comprises a pharmaceutical kit for treating migraine headaches, and a method for preparing the pharmaceutical kit. The preparation is a manufacturing

process which includes packaging in a container a plurality of specific compounds used in the treatment of migraine that are serotonin level elevating, prostaglandin inhibiting and dopamine blocking, preferably a therapeutically effective amount of each compound sufficient to treat at least **2** separate migraine headache attacks, and, providing use instructions for the effective administering of the compounds for migraine headache treatment. The invention further comprises useful features that provide advantages to the patient as well as the provider, i.e., doctor and pharmacy. For example, preferably separate packages for each compound are packed in separated compartments within the container.

[**0017**] Specifically, there is provided a method for preparing a migraine headache treatment which comprises: packaging in a container a therapeutically effective dosage of a serotonin level elevating pharmaceutical compound used in the treatment of migraine; packaging in the container a therapeutically effective dosage of a prostaglandin antagonizing, i.e. inhibiting, pharmaceutical compound used in the treatment of migraine; packaging in the container a therapeutically effective dosage of a dopamine blocking pharmaceutical compound used in the treatment of migraine; including and packaged with said container a vessel of water for use in administering the pharmaceutical compounds which are to be orally administered; and packaging in the container instructions for usage of all of the packaged compounds which are contained in the container.

BRIEF DESCRIPTION OF THE DRAWINGS

[**0018**] The present invention will now be described in more detail by referring to the drawings that accompany the present application. It is noted that in the accompanying drawings like reference numerals are used for describing like and corresponding elements thereof.

[**0019**] **FIG. 1** shows a preferred pharmaceutical kit including injection devices and pharmaceutical compounds of the present invention;

[**0020**] **FIG. 2** shows a preferred container including a nasal spray device and alternative pharmaceutical compounds within the container;

[**0021**] **FIG. 3** shows a preferred pharmaceutical kit including pharmaceutical compounds solely for oral administration;

[**0022**] **FIG. 4***a* shows a preferred implementation comprising a water bottle having coupling threads for attaching the pharmaceutical kit container;

[**0023**] **FIG. 4***b* shows a side cutaway view of a preferred container having the complete regimen of orally administered, individually packaged pharmaceutical compounds;

[**0024**] **FIG. 4***c* shows a top down plane view of the preferred container of **FIG. 4***b;*

[**0025**] **FIG. 5** shows the water bottle coupled to the pharmaceutical kit container; and

[**0026**] **FIG. 6** shows bottom of integrally manufactured water bottle and pharmaceutical kit container with access means.

DETAILED DESCRIPTION OF THE PREFERRED EMBODIMENT

[**0027**] An aspect of this invention applies to the preparation of a kit for the treatment of migraine headaches. In a preferred embodiment of this invention predetermined quantities representing a therapeutically effective dosage of several compounds for treatment of a migraine headache are packaged along with additional components such as a vessel of water, alcohol swabs and instructions for use, in a container by a manufacturing process which, preferably, seals the container and its contents into a self-contained, unitary, migraine headache treatment kit. Known pharmaceutical compounds may be provided, however it should be understood that yet to be developed compounds may also be used as they become available.

[**0028**] Preferably, each drug, i.e., pharmaceutical compound, in the kit is packed separately, yet the separately packed drugs are contained in a single, easy to use container, such as the container shown in **FIG. 1100**. In a preferred aspect of this pharmaceutical kit for treating migraine headaches, precise instructions **140** for use of all the constituents are also provided. Additionally, it is preferable that a kit contain enough medications, i.e., pharmaceutical compounds, to treat at least two migraine attacks. As shown in **FIG. 1**, in a preferred implementation, the container is manufactured such that its compartments **130**, **160**, **165** fit neatly around the individually packaged predetermined number of pharmaceutical compounds **132**, injection administration devices **110** for drug injection below the skin of a user, and a vessel of water, e.g., water bottle **120**. Sufficient space is also provided for additional components such as alcohol swab packet **170** and instructions **140**. Additionally, the separately packed drugs, i.e., the individually packaged pharmaceutical compounds **132** preferably include labels on the separate packaging identifying the particular pharmaceutical compound contained in the package. Preferably, a container surface such as surface **105** includes a latching device **155** for keeping the contents secure within the container. Additionally, a preferred implementation of this invention includes a hand strap **150** for carrying the kit **100**. Although a container with basically rectilinear surfaces **105**, **145** is shown, the container may be provided in any shape and size which provides sufficient space for all of the kit components and pharmaceutical compounds, e.g., water bottle **120**, injection administration devices **110**, alcohol swab packet **170**, instructions **140**, pharmaceutical package **132**, and the like. The container may be made of a relatively soft material such as vinyl and foam, or may provide a relatively hard covering such as high impact plastic.

[**0029**] The container contents include a therapeutically effective dosage of pharmaceutical compounds used in the treatment of migraine, as well as other components to assist drug administration, such as alcohol swab packet **170**. Water bottle **120** is preferably a component that is provided in all implementations of this invention in order to facilitate administering oral dosage units of the pharmaceutical compounds, such as pills, capsules, tablets, and the like. The pharmaceutical compounds are chosen to address various aspects of the migraine condition, such as, e.g., headache, nausea and mood swings. In a preferred implementation of the current invention where all pharmaceutical compounds are oral dosage units, the container may be manufactured to contain more than one water bottle, as shown in **FIG. 3** at **120** and **165**.

[**0030**] In another preferred implementation of this invention, the provided container is manufactured as a permanent attachment to a water bottle, such as container **410** attached

to water bottle **415** so that container **410** and water bottle **415** form one integral manufactured drug kit **500** as shown in **FIG. 5**. The container **410** and water bottle **415** may be manufactured as an integrated, unitary member, with opening means, such as a sliding door, hinged door, or, as shown in **FIG. 6, a** revolving cover with hinge pin **610** and a cut out window **605**, over a bottom of container **410**, for providing access to the contents **132** of the pharmaceutical kit.

[**0031**] In another preferred implementation of this invention, it is understood that container **410** is, preferably, cylindrical, having an inner sidewall **409**, an outer sidewall **408**, and having a depth and size to permit the pharmaceutical compounds **132** and usage instructions **140** to fit inside the container **410**, and to permit the container **410** to securely attach, i.e., mate to e.g., the lower portion **417** of preferably cylindrical water bottle **415** by coupling lower portion **417** of water bottle **415** and container **410** together such that lower portion **417** and container **410** are securely held together by friction contact between them. Additionally, the coupling, in a preferred implementation, as shown in **FIG. 4***b* at **413**, may be provided by threads, preferably on inner sidewall **409** for threading the container **410** on to water bottle **415**. Water bottle **415** comprises complementary threads **419** on its lower portion **417** to accommodate threading the container **410** on to the lower portion **417** of water bottle **415**. Container **410** may also be divided into compartments **412** for a complete regimen of orally administered, individually packaged pharmaceutical compounds (**FIG. 4***c* **132**) such as those discussed below in Migraine Kit-Type III. Preferably, a disk shaped lid **414**, with strap **416** for removal, is included to cover the contents of compartments **412**, yet permitting the secure attachment of container **410** with lid **414** to water bottle **415**. However, with or without the lid **414**, the water bottle **415** mated to container **410** provides a convenient, self contained migraine headache treatment kit.

[**0032**] Because, as discussed above, the most important chemical change in the brain in migraine is the decline in the level of the neurotransmitter serotonin, it is important to provide in the treatment kit **100** a means for elevating serotonin levels. To that end, preferably, a therapeutically effective dosage of a serotonin level elevating pharmaceutical compound used in the treatment of migraine is provided. Additionally, alternative methods of administering the serotonin elevating compound, such as injection devices **110** or nasal spray device **210** (shown in **FIG. 2**), are provided for fastest relief of symptoms associated with lower serotonin levels during a migraine attack. It should be understood that when the nasal spray device **210** is supplied, the container is manufactured such that compartment **260** fits neatly around it. When one or more injection devices **110** are used, alcohol swab packet **170** is provided for skin preparation of the migraine suffered. All modern treatment methods to treat this aspect of a migraine attack use a generic group of drugs called Triptans. One of the most popular Triptan drugs is Imitrex, manufactured by Glaxo Wellcome, now Glaxo Smith Kleine (GSK). Imitrex, i.e., Sumatriptan, is currently marketed in a tablet form (50 mg and 100 mg), a nasal spray form (20 mg) and a 6 mg injectable form, i.e. a statdose pen. In a preferred embodiment of this invention, Sumatriptan may be provided in tablet, as well as liquid forms.

[**0033**] While no skin patch preparation is yet available, it is within the scope of this invention to include a skin patch when a skin patch becomes available. Other available serotonin level elevating compounds which are successfully used and may, preferably, be provided by this invention include Rizatriptan, Zolmitriptan, and Almotriptan. A predetermined number of serotonin level elevating compound dosage units is provided in the manufactured drug kit **100**.

[**0034**] To combat the nausea and moodswings experienced by a large number of migraine sufferers, a dopamine blocking pharmaceutical compound may be prescribed. A preferred implementation of this invention provides a therapeutically effective dosage of dopamine blocking pharmaceutical compound such as Reglan, i.e., Metoclopramide, or Compazine, i.e., Prochlorperazine. A predetermined number of dopamine blocking pharmaceutical compound dosage units is provided in the manufactured drug kit **100**.

[**0035**] Elevated prostaglandin, associated with the severe headache caused by inflamed meninges of migraine sufferers may be combated by lowering, i.e., antagonizing the prostaglandin levels. Thus, preferably a therapeutically effective dosage of a prostaglandin inhibiting pharmaceutical compound, such as, for example, antiinflammatory drugs like Aspirin, i.e., Acetyl Salicylic Acid (325 mg to 500 mg), Tylenol (250 mg to 750 mg), i.e., Acetaminophen, Ibuprofen, and Naproxyn is provided to antagonize, i.e., lower the prostaglandin levels by inhibiting prostaglandin production of the migraine sufferer, wherein relief from the headache is obtained. A predetermined number of prostaglandin inhibiting pharmaceutical compound dosage units is provided in the manufactured drug kit **100**. It should be understood that all of the migraine treatment pharmaceutical compounds discussed above and provided in manufactured drug kit **100** may also be provided in manufactured drug kit **500**.

[**0036**] Listed below are preferable migraine kit compositions with sufficient dosage units, preferably, to provide treatment of at least two separate migraine attacks. It should be understood that the lists are representative examples and do not limit the scope of the migraine kit compositions.

[**0037**] Migraine Kit-Type I:

[**0038**] Imitrex (Sumatriptan) Injection (Stat Dose Pen) quantity 2;

[**0039**] Imitrex (Sumatriptan) Tablet 50 mg, quantity 2;

[**0040**] Reglan (Metoclopromide HCL) 10 mg, quantity 2; and

[**0041**] Select either Ibuprofen 800 mg, quantity 2 (or) Naproxyn 500 mg, quantity 2.

[**0042**] Migraine Kit-Type II

[**0043**] Imitrex (Sumatriptan) Nasal Spray 5 mg to 20 mg, quantity 2

[**0044**] Imitrex (Sumatriptan) Tablets 50 mg, quantity 2

[**0045**] Select from either Reglan (Metoclopromide HCL) 5 mg to 10 mg, quantity 2 (or) Prochlorperazine 5 mg to 10 mg, quantity 2

[**0046**] Select from either Ibuprofen 400 mg to 800 mg, quantity 2 (or) Naproxyn 500 mg to 750 mg, quantity 2.

[0047] Migraine Kit-Type III

[0048] Imitrex (Sumatriptan) Tablet 100 mg, quantity 2

[0049] Imitrex (Sumatriptan) Tablet 50 mg, quantity 2

[0050] Reglan (Metoclopromide HCL) 10 mg, quantity 2

[0051] Ibuprofen 800 mg, quantity 2 (or) Naproxyn 500 mg, quantity 2

[0052] In one aspect of this invention, instead of providing the Imitrex tablet in Migraine Kit type III, one of the following compounds maybe provided:

[0053] Maxalt Tablet or MLT, 5 mg to 10 mg (Rizatriptan);

[0054] Zomig Tablet or ZMT, 2.5 mg to 5 mg (Zolmatriptan);

[0055] Axert Tablet 6.25 mg to 12.5 mg (Almotriptan).

[0056] Now that the invention has been described by way of a preferred embodiment, various modifications and improvements will occur to those of skill in the art. For example, a treatment kit of multiple pharmaceutical compounds could be prepared for the treatment of hypertension, congestive heart failure, or asthma. Thus, it should be understood that the preferred embodiment is provided as an example and not as a limitation. The scope of the invention is defined by the appended claims.

I claim:

1. A method for preparing a pharmaceutical kit for treating migraine headaches, said method comprising:

packaging in a container a therapeutically effective dosage of a serotonin level elevating pharmaceutical compound used in the treatment of migraine;

packaging in said container a therapeutically effective dosage of a prostaglandin inhibiting pharmaceutical compound used in the treatment of migraine;

packaging in said container a therapeutically effective dosage of a dopamine blocking pharmaceutical compound used in the treatment of migraine;

packaging with said container a vessel of water, said vessel of water having an upper portion and a lower portion, and for use in administering the pharmaceutical compounds which are to be orally administered; and

packaging in said container instructions for usage of the pharmaceutical compounds which it contains wherein a convenient container comprising a plurality of the pharmaceutical compounds for the treatment of migraine headaches is provided.

2. The method for preparing a kit for treating migraine headaches as claimed in claim 1, wherein said packaging in said container a therapeutically effective dosage of the serotonin level elevating pharmaceutical compound comprises packaging at least one stat dose pen of injectable Sumatriptan in said container.

3. The method for preparing a pharmaceutical kit for treating migraine headaches as claimed in claim 1, wherein said packaging in said container a therapeutically effective dosage of the serotonin level elevating pharmaceutical compound comprises packaging in said container a predetermined number of dosage units comprising a triptan selected from the group consisting of Sumatriptan, Rizatriptan, Zolmitriptan, and Almotriptan.

4. The method for preparing a kit for treating migraine headaches as claimed in claim 3, wherein any one of the Sumatriptan dosage units comprises Sumatriptan in the range of 50 mg to 100 mg.

5. The method for preparing a kit for treating migraine headaches as claimed in claim 3, wherein any one of the Rizatriptan dosage units comprises Rizatriptan in the range of 5 mg to 10 mg.

6. The method for preparing a kit for treating migraine headaches as claimed in claim 3, wherein any one of the Zolmitriptan dosage units comprises Zolmitriptan in the range of 2.5 mg to 5 mg.

7. The method for preparing a kit for treating migraine headaches as claimed in claim 3, wherein any one of the Almotriptan dosage units comprises Almotriptan in the range of 6.25 mg to 12.5 mg.

8. The method for preparing a kit for treating migraine headaches as claimed in claim 1, wherein said packaging in said container a therapeutically effective dosage of the serotonin level elevating pharmaceutical compound comprises packaging a predetermined number of nasal spray devices containing Sumatriptan in said container.

9. The method for preparing a kit for treating migraine headaches as claimed in claim 8, wherein any one of the Sumatriptan containing nasal spray devices comprises Sumatriptan in the range of 5 mg to 20 mg.

10. The method for preparing a kit for treating migraine headaches as claimed in claim 1, wherein said packaging in said container a therapeutically effective dosage of the dopamine blocking pharmaceutical compound comprises packaging in said container a predetermined number of dosage units comprising a dopamine blocking pharmaceutical compound selected from the group consisting of Metoclopramide, and Prochlorperazine.

11. The method for preparing a kit for treating migraine headaches as claimed in claim 10, wherein any one of the Metoclopramide dosage units comprises Metoclopramide in the range of 5 mg to 10 mg.

12. The method for preparing a kit for treating migraine headaches as claimed in claim 10, wherein any one of the Prochlorperazine dosage units comprises Prochlorperazine in the range of 5 mg to 10 mg.

13. The method for preparing a kit for treating migraine headaches as claimed in claim 1, wherein said packaging in said container a therapeutically effective dosage of the prostaglandin inhibiting pharmaceutical compound comprises packaging in said container a predetermined number of dosage units comprising a prostaglandin inhibiting pharmaceutical compound selected from the group consisting of Ibuprofen, Naproxyn, Acetaminophen, and Acetylsalicylic Acid.

14. The method for preparing a kit for treating migraine headaches as claimed in claim 13, wherein any one of the Ibuprofen dosage units comprises Ibuprofen in the range of 400 mg to 800 mg.

15. The method for preparing a kit for treating migraine headaches as claimed in claim 13, wherein any one of the Naproxyn dosage units comprises Naproxyn in the range of 500 mg to 750 mg.

16. The method for preparing a kit for treating migraine headaches as claimed in claim 13, wherein any one of the

Acetaminophen dosage units comprises Acetaminophen in the range of 250 mg to 750 mg.

17. The method for preparing a kit for treating migraine headaches as claimed in claim 13, wherein any one of the Acetylsalicylic Acid dosage units comprises Acetylsalicylic Acid in the range of 325 mg to 500 mg.

18. The method for preparing a kit for treating migraine headaches as claimed in claim 1, wherein said including with said container comprises packaging in said container the vessel of water.

19. The method for preparing a kit for treating migraine headaches as claimed in claim 1, wherein said including with said container comprises attaching said container to the vessel of water.

20. The method for preparing a kit for treating migraine headaches as claimed in claim 19, wherein said attaching said container to the vessel of water further comprises coupling said container to the lower portion of the vessel of water.

21. A pharmaceutical kit, manufactured to include a complete regimen of components and pharmaceutical compounds necessary for treating migraine headache comprising:

a) a container including a therapeutically effective dosage of a plurality of pharmaceutical compounds used in the treatment of migraine;

b) a vessel of water packaged with said container, said vessel of water having an upper portion and a lower portion, and being used for administering of the pharmaceutical compounds which are to be orally administered; and

c) instructions for the safe and effective use of the pharmaceutical kit for treating the migraine headache.

22. The pharmaceutical kit for treating migraine headache as claimed in claim 21, further comprising at least one injection device having a therapeutically effective dosage of Sumatriptan, said injection device being included in said container for injection of said Sumatriptan below the skin of a user.

23. The pharmaceutical kit for treating migraine headache as claimed in claim 22, further comprising an alcohol swab packet included in said container, said alcohol swab packet being used for preparation of the user's skin associated with the administering of the Sumatriptan which is to be injected.

24. The pharmaceutical kit for treating migraine headache as claimed in claim 21, further comprising at least one nasal spray device having a therapeutically effective dosage of Sumatriptan, said nasal spray device being included in said container for administering of said Sumatriptan through the nasal passages of a user.

25. The pharmaceutical kit for treating migraine headache as claimed in claim 21, further comprising separate labeled packaging for each of the plurality of pharmaceutical compounds, said separate labeled packaging identifying the pharmaceutical compound which it contains.

26. The pharmaceutical kit for treating migraine headache as claimed in claim 25, wherein said plurality of pharmaceutical compounds comprises:

at least two 100 mg oral dosage units of Sumatriptan;

at least two 50 mg oral dosage units of Sumatriptan;

at least two 10 mg oral dosage units of Metoclopromide HCL; and

at least two oral dosage units comprising a prostaglandin inhibiting pharmaceutical compound selected from the group consisting of Ibuprofen and Naproxyn.

27. The pharmaceutical kit for treating migraine headache as claimed in claim 26, wherein each oral dosage unit of Ibuprofen comprises an 800 mg dose.

28. The pharmaceutical kit for treating migraine headache as claimed in claim 26, wherein each oral dosage unit of Naproxyn comprises a 500 mg dose.

29. The pharmaceutical kit for treating migraine headache as claimed in claim **21**, wherein the vessel of water packaged with said container is attached to the container to provide a convenient, self contained migraine headache treatment kit.

30. The pharmaceutical kit for treating migraine headache as claimed in claim 29, further comprising:

the vessel of water having a cylindrical shape including threading on the lower portion of the vessel of water; and

the container having a cylindrical shape with an outer side wall and an inner side wall, said inner side wall having threading complementary to the threading on the lower portion of the vessel of water, thereby providing a coupling for attaching the container to the vessel of water.

31. The pharmaceutical kit for treating migraine headache as claimed in claim 29, further wherein the vessel of water attached to the container comprises an integrally manufactured, unitary member having a revolving cover with a cutout window and hinge pin for providing access to the pharmaceutical kit contents.

* * * * *