US 20030196733A1

(19) **United States**

(12) **Patent Application Publication**

(10) **Pub. No.: US 2003/0196733 A1**

(43) **Pub. Date: Oct. 23, 2003**

Hoffmann et al.

(54) **COOKING UTENSIL MADE FROM ALUMINUM ALLOY STRIPS PRODUCED BY CONTINUOUS THIN GAUGE TWIN ROLL CASTING**

(75) Inventors: **Jean-Luc Hoffmann**, Matzenheim (FR); **Marcel Cortes**, Brignoud (FR)

Correspondence Address:
DENNISON, SCHULTZ & DOUGHERTY
Suite 612
1745 Jefferson Davis Highway
Arlington, VA 22202 (US)

(73) Assignee: **PECHINEY RHENALU**

(21) Appl. No.: **10/457,517**

(22) Filed: **Jun. 10, 2003**

Related U.S. Application Data

(62) Division of application No. 09/403,744, filed on Jan. 3, 2000, filed as 371 of international application No. PCT/FR98/00965, filed on May 14, 1998.

(30) **Foreign Application Priority Data**

May 20, 1997 (FR) 97 06407

Publication Classification

(51) **Int. Cl.**[7] **C22F 1/00**

(52) **U.S. Cl.** **148/551**; 148/538

(57) **ABSTRACT**

The invention concerns a method for making aluminium alloy strips containing (by weight) at least 0.15 to 1.5% Fe and/or 0.35 to 1.9% Mn, with Fe+Mn<2.5% and optionally Si<0.8%, Mg<0.2%, Cu<0.2%, Cr<0.2%, Zn<0.2%, and other elements each <0.1% and <0.3 % in all, by continuous casting between two cylinders cooled and shrinked to a thickness ranging between 1 and 5 mm, the force applied to the cylinders during casting, expressed in tonnes per meter of strip width, being less than 300+2000/e, e being the cast strip thickness in mm. The invention also concerns strips in alloy of the same composition, twin-roll cast between 1 and 5 mm thick and having a product $R_{0.2}$ (MPa)×A (%) greater than 2500, and preferably than 3000.

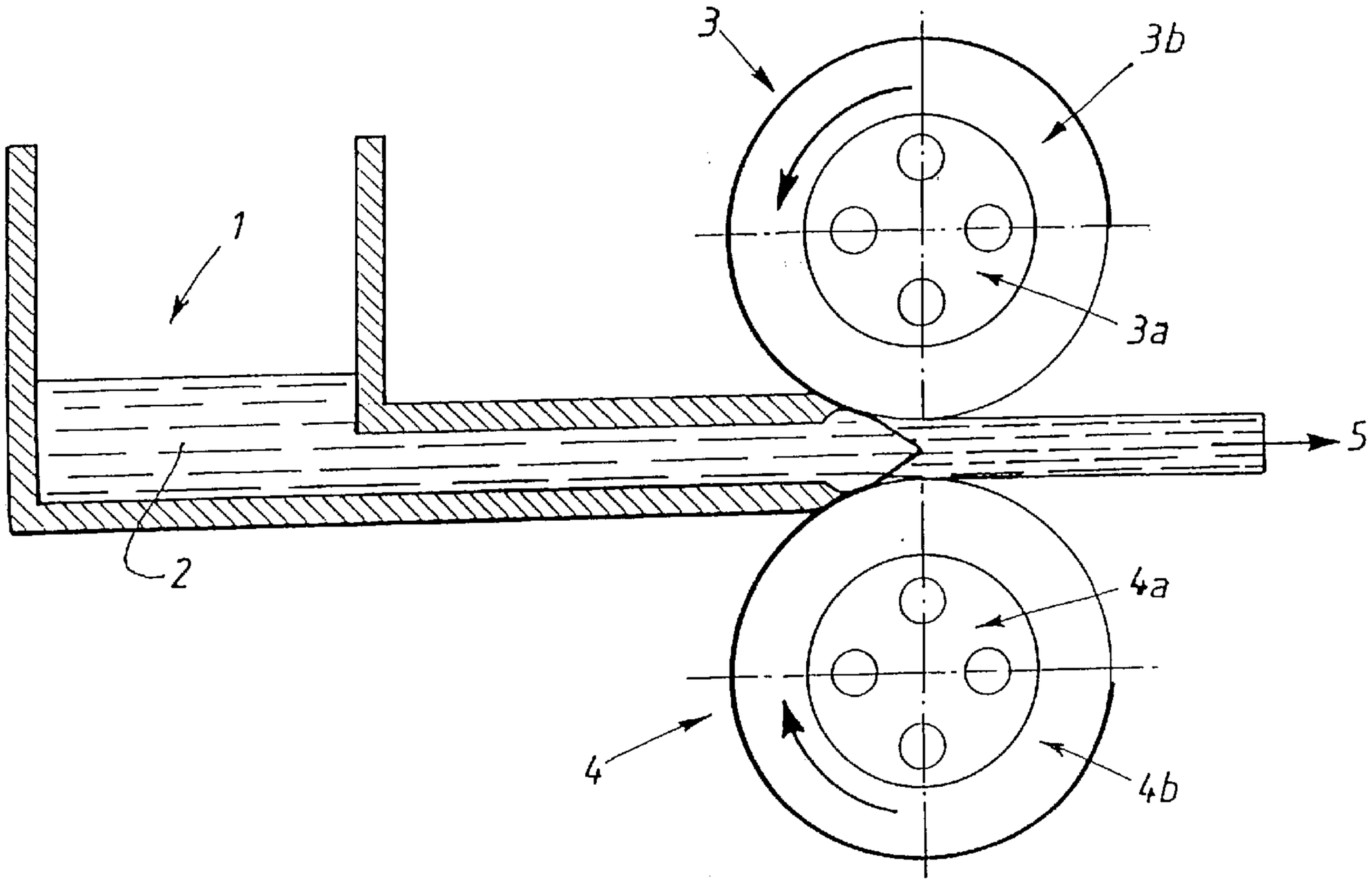

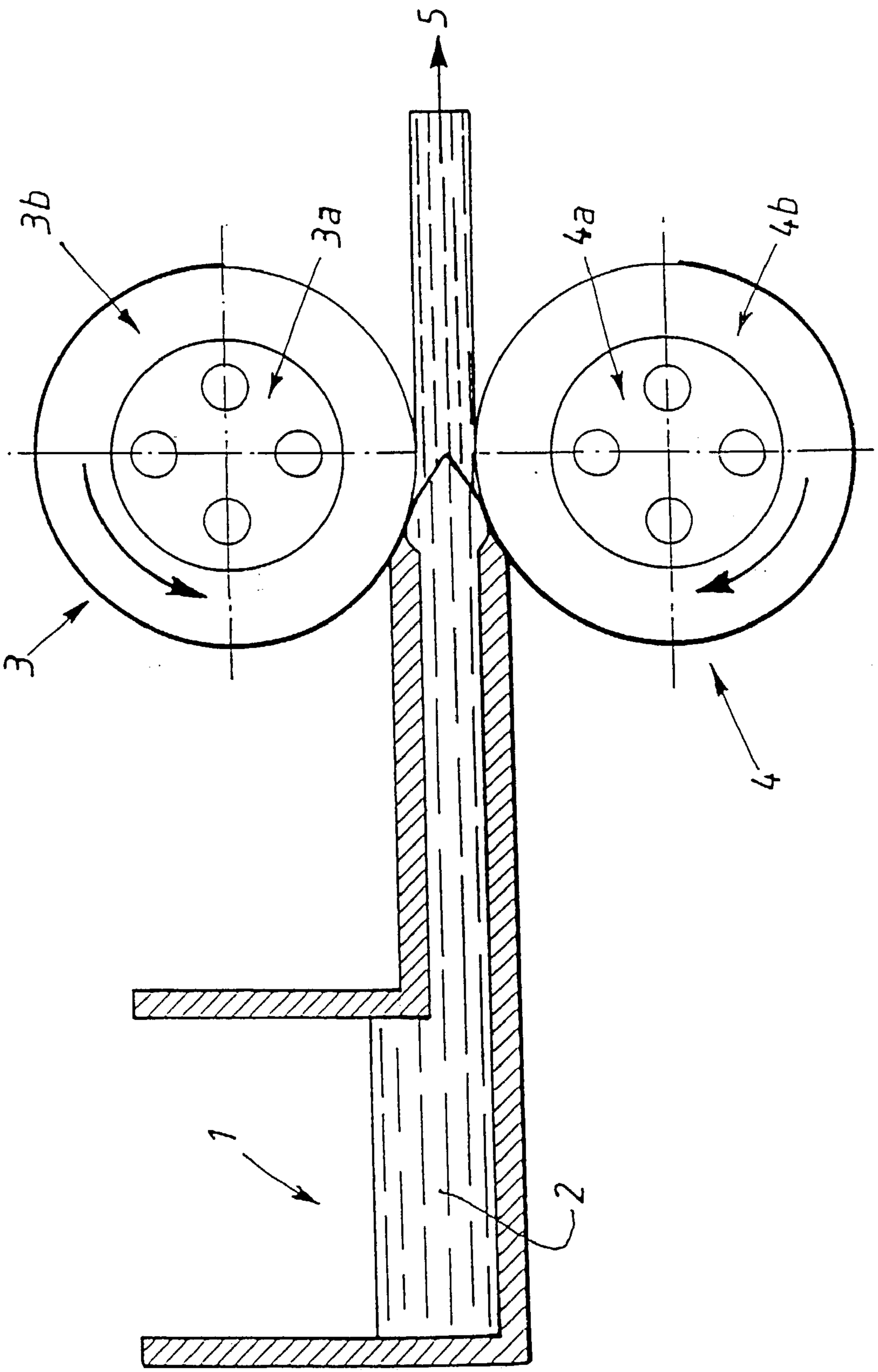
5
3b
3a
4a
4b
3
4
1
2

COOKING UTENSIL MADE FROM ALUMINUM ALLOY STRIPS PRODUCED BY CONTINUOUS THIN GAUGE TWIN ROLL CASTING

TECHNICAL FIELD

[0001] The invention concerns a method for making aluminium alloy strips with low magnesium and copper content, especially AlFeSi and AlMn alloys, by continuous thin gauge twin-roll casting (<5 mm). It also relates to strips of said alloys cast by thin gauge twin-roll casting, and optionally cold rolled, having high mechanical resistance, good formability and good anisotropy.

STATE OF THE ART

[0002] To obtain high mechanical resistance with aluminium alloys not requiring subsequent structural hardening, recourse is generally made to the addition of magnesium, as for the alloys of the 5000 series as per the Aluminium Association nomenclature. Aside from the fact that the casting of these alloys, in particular their continuous casting, is fairly demanding, there are applications for which the presence of magnesium in substantial quantities is unacceptable. This is the case for example with sheets intended for enamelled cooking utensils, in which magnesium has an adverse affect on the adherence of the enamel layer, or for strips intended for manufacturing heat exchanger blades brazed with a fluoride flux, since the magnesium diffuses on the surface and reacts with the flux. On this account, for these applications use is made of the AlFeSi alloys in the 1000 series, AlMn alloys in the 3000 series or AlSiFe alloys in the 4000 series whose mechanical resistance is distinctly lower. The article by M. DELEUZE and D. MARCHIVE on the new wrought alloys "Les nouveaux alliages de corroyage 4006 et 4007" *Revue de l'Aluminium*, June 1980, pp. 289-292, clearly demonstrates the demands of the cooking utensil market placed upon aluminium alloy strip manufacturers.

[0003] These alloy strips are usually produced by vertical semi-continuous casting of plates, hot rolling, cold rolling and soft annealing. After enamelling, involving annealing at a temperature in the region of 550° C., or after PFTE coating submitted to polymerization at around 450° C., the sheets of 4006 and 4007 alloys have a yield strength $R_{0.2}$ of between 55 and 80 MPa.

[0004] It is also possible to make strips by continuous casting, in particular by twin-roll casting between two cooled steel cylinders. Continuous casting, inasmuch as the solidification conditions differ from the usual process, may lead to microstructures that are also quite different. U.S. Pat. No. 3,989,548 for example by Alcan, published in 1976 describes (example 9) aluminium alloys containing at least one of the elements Fe, Mn, Ni or Si cast in strips by continuous twin-roll casting to a thickness of 7 mm. The structure of the cast strip contains rod-like fragile intermetallic compounds with a diameter of between 0.1 and 1.5 μm, which cold rolling with a reduction of at least 60% breaks down into fine particles less than 3 μm in size. The strips obtained offer a good compromise between mechanical resistance and formability, but these properties only become of real interest in fairly high content alloys for example AlFeMn alloys with Fe>1.4% and Mn>0.6%, or AlFeNi alloys with Fe>1.2% and Ni>1.1%.

[0005] Patent FR 2429844 (=GB 2024870) by Norsk Hydro describes a continuous casting method for producing alloy strips of AlMn, AlMg, AlMgSi or AlMgMn offering both good mechanical resistance and good ductility, to which less than 0.5% of anti-recrystallizing agents are added (Zr, Nb, Ta, Hf, Ni, Cr, Ti, V or W).

[0006] U.S. Pat. No. 5,380,379 by Alcoa concerns the manufacture by continuous twin-roll casting of fairly high content alloy foil with 1.35 to 1.6% iron, 0.3 to 0.6% manganese, 0.1 to 0.4% copper, and less than 0.2% silicon. The silicon content is limited by the onset of intermetallic phases of AlFeSi or AlMnSi type while the presence of copper is necessary to impart sufficient mechanical resistance to the product.

[0007] Conversely, patent application WO 96/27031 by Alcan concerns alloys with lower alloying content containing 0.40 to 0.70% iron, 0.10 to 0.30% manganese, 0.10 to 0.25% copper and less than 0.10% silicon, obtained by continuous casting of strips having a thickness of less than 25 mm, whose properties are close to those of alloy 3003. After cold rolling and annealing at between 350 and 400° C., the alloy at temper "O" (according to norm NF EN 515) shows a grain size of less than 70 microns and properties very close to those of alloy 3003 produced using a usual processing range. This kind of composition may prove to be restrictive for some applications in which lesser content alloys are used such as 1050 or copper-free alloys.

[0008] Patent EP 0039211 by Alcan describes a continuous casting manufacturing process to a thickness of between 3 and 25 mm of AlMn alloy strips containing 1.3 to 2.3% manganese, and possibly less than 0.5% iron, magnesium or copper, less than 2% zinc and less than 0.3% silicon. The processing range described is fairly complex since it comprises homogenisation to precipitate at least one half of the manganese in intermetallic form, cold rolling with a reduction of at least 30% and one or more intermediate annealing operations. The strips obtained show mechanical characteristics which lead to a product $A \times R_{0.2}$, A being elongation in % and $R_{0.2}$ being the yield strength at 0.2% in MPa, whose value is no more than 2100.

[0009] Patent EP 0304284 by Alcan describes an alloy with high thermal stability containing from 1.5 to 2.5% manganese, 0.4 to 1.2% chromium, 0.4 to 0.8% zirconium and up to 2% magnesium, and its production by continuous casting of strips having a thickness of less than 4 mm. The very unusual chromium and zirconium contents, especially when combined with an addition of magnesium, lead to high mechanical resistance but to the detriment of elongation which remains less than 10%, making these alloys unfit, even in the absence of magnesium, for the production of cooking utensils for example.

[0010] The continuous casting of aluminium alloy strips between cooled cylinders has been known for many years. For a moderate investment cost it can be used to produce a fairly wide range of alloy strips which do not require subsequent hot rolling. In recent years, considerable progress has been made by manufacturers of casting machines to reduce the thickness of the cast strip, which can in some cases be reduced to approximately 1 mm, thereby reducing the amount of cold rolling needed and can even do away with the latter for final gauges of >1 mm provided that the quality of the cast strip is sufficient for intended appli-

cations. This progress has been the subject of several papers at technical meetings for example

[0011] M. CORTES "Pechiney Jumbo 3 CM®. The new demands of thin strip casting" Light Metals TMS 1995, p. 1161.

[0012] B. TARAGLIO, C. ROMANOWSKI "Thin gauge/High Speed roll casting technology for Foil Production" Light Metals TMS 1995, pp. 1165-1182. This article mentions a certain number of alloys which may be cast on the described machine, for example alloys 1050, 1060, 1100, 1145, 1188, 1190, 1193, 1199, 1200, 1230, 1235, 1345, 3003, 8010, 8011, 8111 and 8014. The article also indicates that the force of the roll-mill used for continuous twin-roll casting is 3000 t, which stresses the need to use high forces for thin gauge casting.

PURPOSE OF THE INVENTION

[0013] The purpose of the invention is to obtain aluminium alloy strips with low Mg and Cu content which, at the as-cast state or at the cold rolled state, offer mechanical resistance which is distinctly greater than that of similar strips having the same composition obtained by conventional casting or thick-gauge continuous casting, and which also have at least equivalent formability and anisotropy. A further purpose is to obtain aluminium alloy strips which recrystallize at a much higher temperature than the recrystalization temperature of the same alloys obtained by conventional casting, in particular to obtain alloys which do not recrystallize at the usual enamelling or PTFE polymerisation temperature for cooking utensils.

SUBJECT OF THE INVENTION

[0014] The subject of the invention is a method for producing aluminium alloy strips containing (by weight) at least one of elements Fe (from 0.15 to 1.5%) or Mn (from 0.35 to 1.9%) with Fe+Mn<2.5%, and optionally containing Si (<0.8%), Mg (<0.2% preferably <0.05%), Cu (<0.2% preferably <0.1%), Cr (<0.2% preferably <0.02%) or Zn (<0.2% preferably <0.1%), the other elements being <0.1% each and 0.3% in all, by continuous casting between cooled shrinked cylinders, to a thickness of between 1 and 5 mm, optionally followed by cold rolling, the force applied to the casting rolls expressed in t per metre of strip width being less than 300+2000/e, e being the thickness of the strip expressed in mm. Casting is preferably made with an arc of contact of less than 60 mm with slowed down heat exchange such that the temperature of the cylinder bands remains at a temperature above 80° C., preferably above 130° C.

[0015] A further subject of the invention is aluminium alloy strips having the above composition and a gauge of between 1 and 5 mm, obtained by continuous twin-roll casting which, at as-cast state, have a product $R_{0.2}$×A of >2500 (preferably >3000), $R_{0.2}$ being the yield strength at 0.2% of the strip expressed in MPa and A the elongation expressed as %. The strips have a yield strength $R_{0.2}$ of more than 80 MPa, their elongation A is greater than 20% and their earing ratio is less than 7, preferably less than 5.

[0016] Finally another subject of the invention is an AlMn alloy strip that comes under the preceding composition (Mn>0.35%) such that the sum of the Fe+Mn contents lies between 1.4 and 2.5% (preferably between 1.5 and 2%) twin-roll cast to a thickness of <5 mm and optionally cold rolled, which after enamelling or PTFE coating has a yield strength of >80 MPa preferably >100 MPa.

DESCRIPTION OF THE INVENTION

[0017] The invention is based on the finding that a particular adjustment of the parameters for continuous thin gauge twin-roll casting can, for alloys without heat treatment and without the addition of magnesium or copper, achieve a set of fully surprising mechanical characteristics at the cast or cold rolled state, in particular a much higher yield strength than that of strips having the same composition cast in conventional manner or by continuous thick gauge casting or by continuous thin gauge casting under different conditions.

[0018] The invention applies to aluminium alloys without heat treatment and virtually free of magnesium and copper. They are mainly alloys with very low additional element content, such as 1050 but still containing at least 0.15% iron, AlFeSi alloys possibly containing up to 1.5% iron and 0.8% silicon, such as alloys 1050, 1100, 1200, 1235, 8006 (this latter also containing manganese), 8011 or 8079, and finally manganese alloys containing between 0.35 and 1.9% Mn, such as alloy 3003.

[0019] For alloys containing silicon, the possibility of reaching a silicon content as high as 0.8% is an advantage compared with conventional casting and enables the recycling of some alloys, such as those used for brazed exchangers coated with an AlSi alloy. However, beyond 0.8%, the formation is observed of AlMnSI or AlFeSi primary phases which may hinder casting, in particular due to the risk of solidification in the injector. There is even a risk of the onset of primary phases for manganese alloys when Mn exceeds 1.9% or when the sum Mn+Fe exceeds 2.5%.

[0020] The strips of the invention have an original microstructure. The average particle size of intermetallic iron, silicon or manganese phases is in the region of 0.4 μm, and at least 90% of these particles are less than 1 μm in size. This microstructure can be seen under electron scanning microscopy on a polished metal section. To determine particle size, digital analysis of micrographs is used to determine their surface area A, from which the size parameter d can be calculated using the formula $d=24\sqrt{A/\pi}$.

[0021] The method for producing aluminium alloy strips according to the invention will be described with reference to **FIG. 1** which gives a longitudinal cross-section diagram of a continuous twin-roll casting machine. This machine comprises a liquid metal feed (**1**), an injector (**2**) which injects the liquid metal into the space between twin cooled rolls (**3** and **4**). Each roll (**3**) and (**4**) comprises a cylinder body (**3***a*) and (**4***a*) with a cooling water circuit leading to its surface. The cylinder body is shrinked with a tubular shell (**3***b*) and (**4***b*) which ensures mechanical and heat contact with the metal and may be replaced when worn. Metal solidification is made between the rolls and a solid metal strip (**5**) emerges. By arc of contact is meant the distance d separating the injector outlet (**2**) and the plane of the roll axes (**3**) and (**4**).

[0022] The alloy is cast in a strip having a thickness of between 1 and 5 mm. The main condition to be heeded is to

cast with relatively low separating force unlike the teaching of the prior art. This force expressed in tonnes per metre of cast strip width must remain below 300+2000/e, e being the cast thickness measured in mm. Therefore for a cast thickness of 2.5 mm, the force must remain lower than 1100 t per metre of width.

[**0023**] Other arrangements have a favourable influence on the mechanical characteristics of the cast strip. For example, contrary to expectation, it is preferable that the heat exchange between the metal undergoing solidification and the cylinder shells should not be too good. This leads to a high cylinder shell temperature, typically more than 80° C., preferably more than 130° C., and can be achieved with shells in metal having poor thermal conductivity (for example a molybdenum steel) and relatively thick (for example between 50 and 100 mm). Another favourable arrangement, which partly relates to the preceding arrangement, is to operate with a rather low arc of contact, less than 60 mm, preferably less than 56 mm. This reduces the heat exchange between the metal and the cylinder shells and can be achieved by moving the injector close to the rolls and/or using relatively small rolls.

[**0024**] These casting conditions impart upon the strip the above-described microstructure and achieve non-recrystallization of the alloy until it reaches a temperature in the region of 380 to 400° C., which enables high mechanical resistance for example to be maintained after enamelling or PTFE coating treatment for cooking Utensils produced from this strip.

[**0025**] The mechanical resistance of the alloy strips of the invention, at the as-cast state, is distinctly greater than that of strips in the same alloy and of the same thickness obtained by conventional plate casting with hot and cold rolling, and even of strips made by continuous casting under different casting conditions. The yield strength, for all the alloys of the invention, is always higher than 80 MPa and most often more than 100 MPa, in particular for the manganese alloys. Good formability is also achieved with elongation that is always greater than 20% (and 30% for Mn-free alloys such as 1050 or 1200) and above all there is particularly favourable compromise between yield strength and elongation measured by the product $R_{0.2}\times A$ ($R_{0.2}$ expressed in MPa and A in %), this product being at all times more than 2500, and most frequently more than 3000. Good anisotropic properties are also obtained with an earing ratio that is always less than 7, and most often less than 5.

[**0026**] The mechanical characteristics are measured in the length direction in accordance with standard EN 10002. The earing ratio is measured in accordance with standard NF-EN 1669 with a stamping ratio of between 1.8 and 1.95, preferably 1.92, and is expressed (as %) by the ratio 2×(mean height of 4 ears−mean height of 4 troughs)/(mean height of 4 ears+mean height of 4 troughs), the anisotropy of the this type of alloy generally being of 4 ear type at 45°.

[**0027**] For manganese alloys with Mn+Fe>1.4%, after annealing up to 550° C. (for example enamelling and PTFE annealing) a yield strength of >80 MPA is obtained most often >100 MPa.

[**0028**] After one or more cold rolling passes, the strips of the invention have a yield strength $R_{0.2}$ that is significantly much higher than that of strips produced by conventional casting and subjected to the same work hardening. The yield strength after work hardening is usually expressed by a work hardening law according to the formula

$R_{0.2}=k\epsilon^n$ where $\epsilon=(2/\sqrt{3})ln$ (initial thickness/final thickness)

[**0029**] the initial thickness being the as-cast thickness for continuous strip casting, and the strip thickness at the last recrystallization annealing for strips produced by conventional casting from plates and hot rolled. For cold rolled strips of the invention with a reduction coefficient of no more than 60%, that is to say for ϵ values lying between 0 and 1, the k coefficient is always greater than 150, whereas it is less for strips produced by conventional casting, and n is lower than 0.20 (and most often than 0.15) whereas it is greater than 0.20 for strips produced by conventional casting.

[**0030**] This set of properties is particularly advantageous for the production of drawn cooking utensils for which it is necessary to use magnesium-free alloys. With this thin-gauge casting it is possible to use as-cast strips, which offer an advantageous cost price, and the heat treatments involved for enamelling and coating with anti-adhesive products such as polytetrafluorethylene (PTFE) do not lead to a loss in mechanical characteristics. These properties are also of interest for the production of fins for heat exchangers, in particular for radiators or motor vehicle air conditioning systems intended to be assembled with tubing by brazing with a non-corrosive flux. Here again the presence of magnesium is unacceptable and furnace brazing does not lead to any reduction in mechanical characteristics. Finally, they are also of interest for the production of varnished or lacquered products which need to undergo heat treatment for the coating.

EXAMPLES

Example 1

Influence of the Separating Force

[**0031**] On a continuous twin-roll 3CM casting machine made by Pechiney Aluminium Engineering, 5 alloys were cast whose chemical composition (by weight %) is given in table I:

TABLE I

Alloy	Mn	Fe	Si	Mg
8006	0.44	1.29	0.15	0.028
3003	1.1	0.40	0.10	—
1050	—	0.20	0.14	0.002
8011	—	0.75	0.70	—
1200	—	0.55	0.20	—

[**0032**] In each case, measurements were taken of cast thickness, separating force per metre of strip width, compared with the limit value of 300-2000/e, and the mechanical characteristics of the as-cast strip tensile strength R_m (in MPa), yield strength at 0.2% $R_{0.2}$ (in MPa), elongation A(%) and earing ration (%) according to standard NF-EN 1669 with a drawing ratio of 1.92. The results are grouped together in table II:

TABLE II

Alloy	e mm	Force t/m	300 + 2000/e	R_m MPa	$R_{0.2}$ MPa	A %	$R_{0.2} \times A$	Earing ratio
8006	3.1	867	945	166	118	25	2950	2.8
3003	3.0	900	967	158	114	23	2622	4.4
1050	3.5	720	871	106	81	39	3159	4.0
8011	3.9	1018	813	156	112	23	2576	9.0
1200	3.0	1100	967	121	93	32	2976	8.9
3003	3.5	1400	871	181	141	17	2297	8.0

[0033] It is found that, in the first 3 cases, both an elongation of more than 20% and a product $R_{0.2} \times A$ of more than 2500 is obtained, together with an earing ratio of less than 7. On the other hand, for the 3 last cases in which the force is too high, the earing ratio is quite substantial which renders the strip unfit for stamping.

Example 2

Influence of Cylinder Band Temperature

[0034] For alloys 1050 and 3003 a comparison was made of the mechanical characteristics of the cast strips at respective cylinder shell temperatures of 130° according to the invention) and 700 (outside the invention). The results are given in table 3:

TABLE III

Alloy	e (mm)	temp (°)	R_m (MPa)	$R_{0.2}$ (MPa)	A (%)	$R_{0.2} \times A$
1050	3	130	106	81	39	3159
1050	3	70	105	80	29	2320
3003	3.5	130	158	114	23	2622
3003	3	70	149	114	18	2052

[0035] It is found that a high cylinder shell temperature contributes to increasing elongation without detriment to mechanical resistance.

Example 3

Influence the Arc of Contact and Separating on Earing Ratio

[0036] The earing ratio was measured on strips cast to different thicknesses with different separating forces and arcs of contact of different lengths. The results are grouped together in table IV.

TABLE IV

Alloy	e mm	Force t/m	300 + 2000/e t/m	Arc of contact mm	Earing ratio
8006	3.1	867	943	45	2.8
3003	3.0	937	967	45	3.2
8006	3.2	867	925	45	3.2
8006	3.1	833	945	45	2.4
3005	3.0	567	967	45	1.5
3005	2.35	833	1151	45	1.7
1050	1.95	727	1326	45.5	6.3
1050	1.7	767	1476	45.5	6.7
1050	4.0	930	800	52	4.7
1050	3.0	920	967	52	6.0

TABLE IV-continued

Alloy	e mm	Force t/m	300 + 2000/e t/m	Arc of contact mm	Earing ratio
1050	3.1	1253	945	70	8.5
1050	3.5	720	871	53	4
8011	3.9	1019	813	57	9.0
1200	4.15	780	782	58	6.5
1200	4.15	769	782	58	5.4
1200	3.6	1055	856	62	8.8
8011	3.8	1440	826	55	7.5
8011	3.7	1440	841	56	8.2
1200	3.0	1230	967	55	12
8011	3.8	1104	826	57	7.6
8011	3.35	850	901	56	5.2
8011	3.55	979	862	56	9.5
8011	3.65	925	849	57	9.6

[0037] It is found that there is no correlation between the cast thickness and the earing ratio, but that high earing ratios (>7) correspond to high forces (>300+2000/e) and/or high arcs of contact (>56 mm).

Example 4

Mechanical Characteristics after Enamelling and PTFE Coating

[0038] For the different alloys of the invention measurements were made of the mechanical characteristics at as-cast state, after anti-adhesive PTFE coating comprising resin polymerisation annealing at 420° C. and after enamelling comprising an enamelling annealing at 560° C. The results after heat treatment were compared with those obtained with alloys 4006 and 4007 which underwent conventional processing, and which are the alloys with the highest performance used for the production of enamelled or PTFE coated cooking utensils. The results are given in table V:

TABLE V

		Crude cast			After PTFE coating			After enamelling		
All	e mm	R_m MPa	$R_{0.2}$ MPa	A %	R_m MPa	$R_{0.2}$ MPa	A %	R_m MPa	$R_{0.2}$ MPa	A %
3003	3.0	158	114	22	154	110	23	148	105	26
3003	3.5	181	141	17	173	136	20	156	111	25
8006	3.1	166	118	25	151	108	27	132	85	32
8011	3.9	156	112	23	139	75	28	125	36	36
1200	3.0	121	93	32	100	64	34	80	20	50
4006					120	55	48	142	59	42
4007					161	68	30	173	76	26

[0039] It is found that after PTFE coating, the alloys with lesser alloying content 1200, 8006 and 8011 made with continuous casting according to the invention still show a yield strength that is comparable with that of alloys 4006 and 4007 specially designed for their resistance to high temperatures. After enamelling, alloy 3003 according to the invention shows a much higher yield strength than that of alloys 4006 and 4007 made by conventional casting whereas these alloys are specially designed for enamelling.

Example 5

Work Hardening Laws

[0040] The work hardening curves were compared of alloys 1200 and 3003 produced by conventional casting and

by continuous casting according to the invention, from an initial thickness of 3 mm up to final thicknesses reaching 1.25 mm, that is to say for values e lying between 0 and 1. The respective values of the k and n coefficients for the curve $R_{0.2}=k\epsilon^n$ are given in table VI:

TABLE VI

Alloy	cast	k	n
1200	invention	169	0.13
1200	conventional	105	0.21
3003	invention	229	0.12
3003	conventional	150	0.22

[**0041**] It is found that for the strips of the invention in the domain under consideration, k is higher and n is lower, which leads to greater work hardening since $\epsilon<1$ and $n<1$.

1. Method for producing aluminium alloy strips containing(by weight) at least one of elements Fe (from 0.15 to 1.5%) or Mn (from 0.35 to 1.9%) with: Fe+Mn<2.5%, and optionally containing Si (<0.8%), Mg (<0.2%), Cu (<0.2%), Cr (<0.2%), Zn (<0.2%), other elements <0.1% each and 0.3% in all, by continuous twin-roll casting between cooled shrinked cylinders to a thickness of between 1 and 5 mm, optionally followed by cold rolling, the force applied to the rolls during casting, expressed in t per metre of strip width, being less than 300+2000/e, e being the thickness of the cast strip expressed in mm.

2. Method for producing aluminium alloy strips containing (by weight) at least one of elements Fe (from 0.15 to 1.5%) or Mn (from 0.35 to 1.9%) with Fe+Mn<2.5%, and optionally Si<0.8%, Mg <0.2%, Cu <0.2%, Cr<0.2%, Zn<0.2%, other elements <0.1% each and 0.3% in all, by continuous twin-roll casting between cooled shrinked cylinders, characterised in that the heat exchange between the metal and the cylinder shells during casting is slowed down such that the temperature of the cylinder shells is higher than 80° C., preferably than 130° C.

3. Method in accordance with claim 2, characterised in that the cylinder shell material has poor thermal conductivity.

4. Method according to any of claims 1 to 3, characterised in that the arc of contact between the metal and the casting rolls is less than 60 mm, preferably less than 56 mm.

5. Aluminium alloy strip containing (by weight) at least one of elements Fe (from 0.15 to 1.5%) or Mn (from 0.35 to 1.9%) with Fe+Mn<2.5% and optionally containing Si (<0.8%), Mg (<0.2%), Cu (<0.2%) or Zn (<0.2%), other elements <0.1% each and 0.3% in all, continuous cast to a thickness of between 1 and 5 mm, having at the as-cast state a product $R_{0.2}$ (in MPa)×A (%) greater than 2500.

6. Strip according to claim 5 having a product $R_{0.2}$×A greater than 3000.

7. Strip according to either of claims **5** or **6** having a yield strength $R_{0.2}$ greater than 80 MPa.

8. Strip according to claim 7 having a yield strength $R_{0.2}$>100 MPa.

9. Strip according to any of claims **5** to 8, having an elongation A>20%.

10. Strip in Mn-free alloy according to claim 9 having an elongation A>30%.

11. Strip according to any of claims 5 to 10, having an earing ratio of less than 7.

12. Strip according to claim 11, having an earing ratio of less than 5.

13. Strip according to any of claims 5 to 12, characterized in that the average size of the intermetallic particles containing Fe, Mn and/or Si is no more than 0.4 μm.

14. Strip according to any of claims 5 to 13, characterized in that the size of at least 90% of the intermetallic particles containing Fe, Mn and/or Si is less than 1 μm.

15 Strip in Al-Mn alloy according to any of claims 5 to 14 with Fe+Mn>1.4% having, after enamelling and/or PTFE anti-adhesive coating treatment, a yield strength of more than 80 MPa, preferably more than 100 MPa.

16. Strip cold rolled from a strip according to any of claims **5** to 15, characterized in that the k and n coefficients of the work hardening curve $R_{0.2}=k\epsilon^n$, in which $\epsilon=(2/\sqrt{3})l_e$ (initial thickness/final thickness) are such that k>150 and n<0.20.

17. Strip according to claim 16, characterized in that n<0.15.

18. Enamelled and/or PTFE anti-adhesive coated cooking utensil produced from strips according to any of claims 5 to 17.

19. Lacquered or varnished strip according to any of claims 5 to 17.

* * * * *