US 20030196550A1

(19) **United States**

(12) **Patent Application Publication**

(10) **Pub. No.: US 2003/0196550 A1**

(43) **Pub. Date: Oct. 23, 2003**

Keefer et al.

(54) LIFE SUPPORT OXYGEN CONCENTRATOR

(75) Inventors: **Bowie G. Keefer**, Vancouver (CA); **Christopher McLean**, Vancouver (CA)

Correspondence Address:
KLARQUIST SPARKMAN, LLP
121 SW SALMON STREET
SUITE 1600
PORTLAND, OR 97204 (US)

(73) Assignee: **QuestAir Technologies Inc.**

(21) Appl. No.: **10/358,411**

(22) Filed: **Feb. 4, 2003**

Related U.S. Application Data

(63) Continuation of application No. 09/733,606, filed on Dec. 8, 2000, now Pat. No. 6,514,319.

(30) **Foreign Application Priority Data**

Dec. 9, 1999 (CA) 2,292,054

Publication Classification

(51) **Int. Cl.**[7] **B01D 53/02**

(52) **U.S. Cl.** **95/96**

(57) **ABSTRACT**

Gas separation by pressure swing adsorption (PSA) and vacuum pressure swing adsorption (VPSA), to obtain a purified product gas of the less strongly adsorbed fraction of the feed gas mixture, is performed with an apparatus having a plurality of adsorbers. The adsorbers cooperate with first and second valve means in a rotary PSA module, with the PSA cycle characterized by multiple intermediate pressure levels between the higher and lower pressures of the PSA cycle. Gas flows enter or exit the PSA module at the intermediate pressure levels as well as the higher and lower pressure levels, under substantially steady conditions of flow and pressure. The PSA module comprises a rotor containing laminated sheet adsorbers and rotating within a stator, with ported valve faces between the rotor and stator to control the timing of the flows entering or exiting the adsorbers in the rotor. Feed gas is compressed prior to entry to the first valve means. Exhaust is passed either directly or through a vacuum pump to the atmosphere.

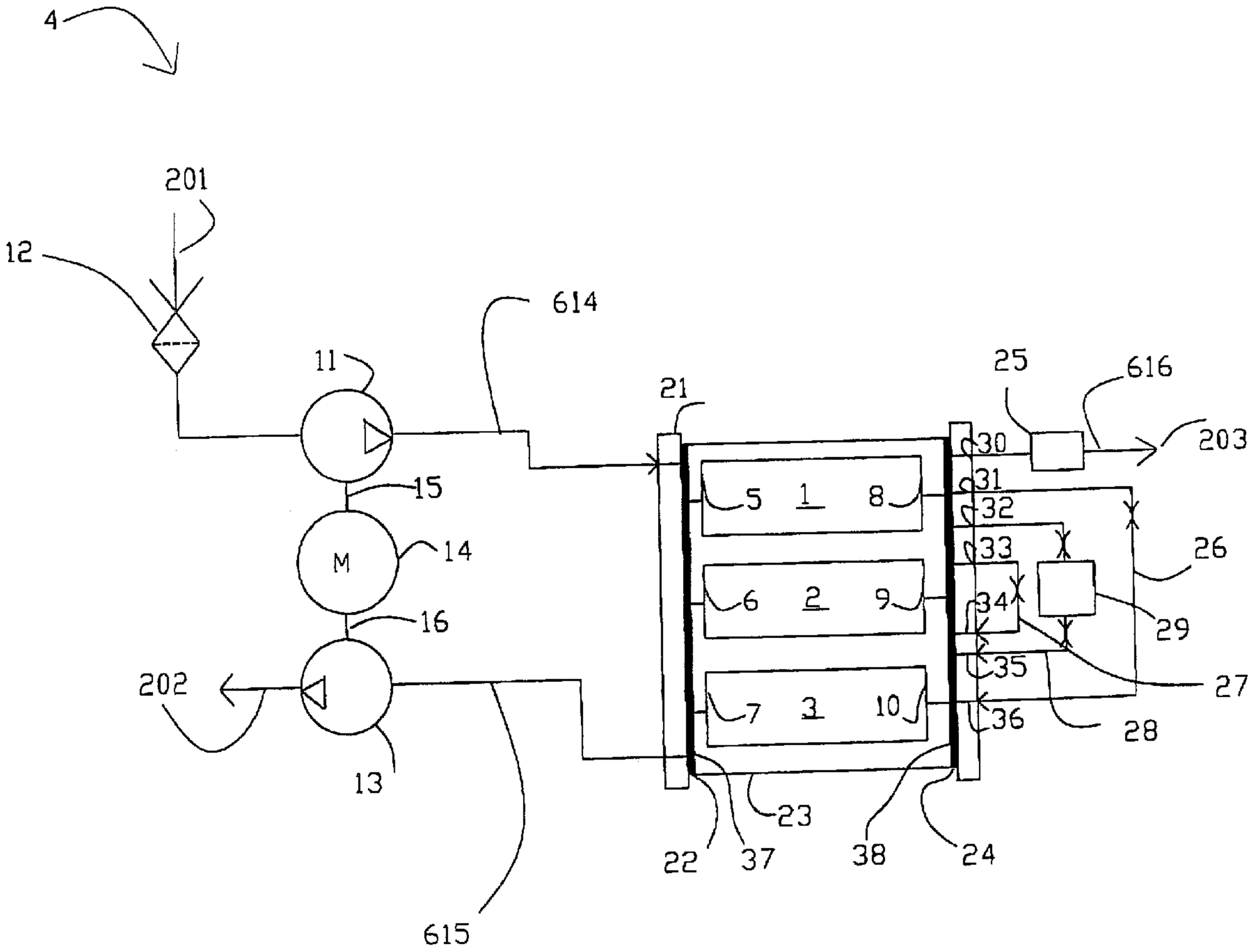

Fig. 1

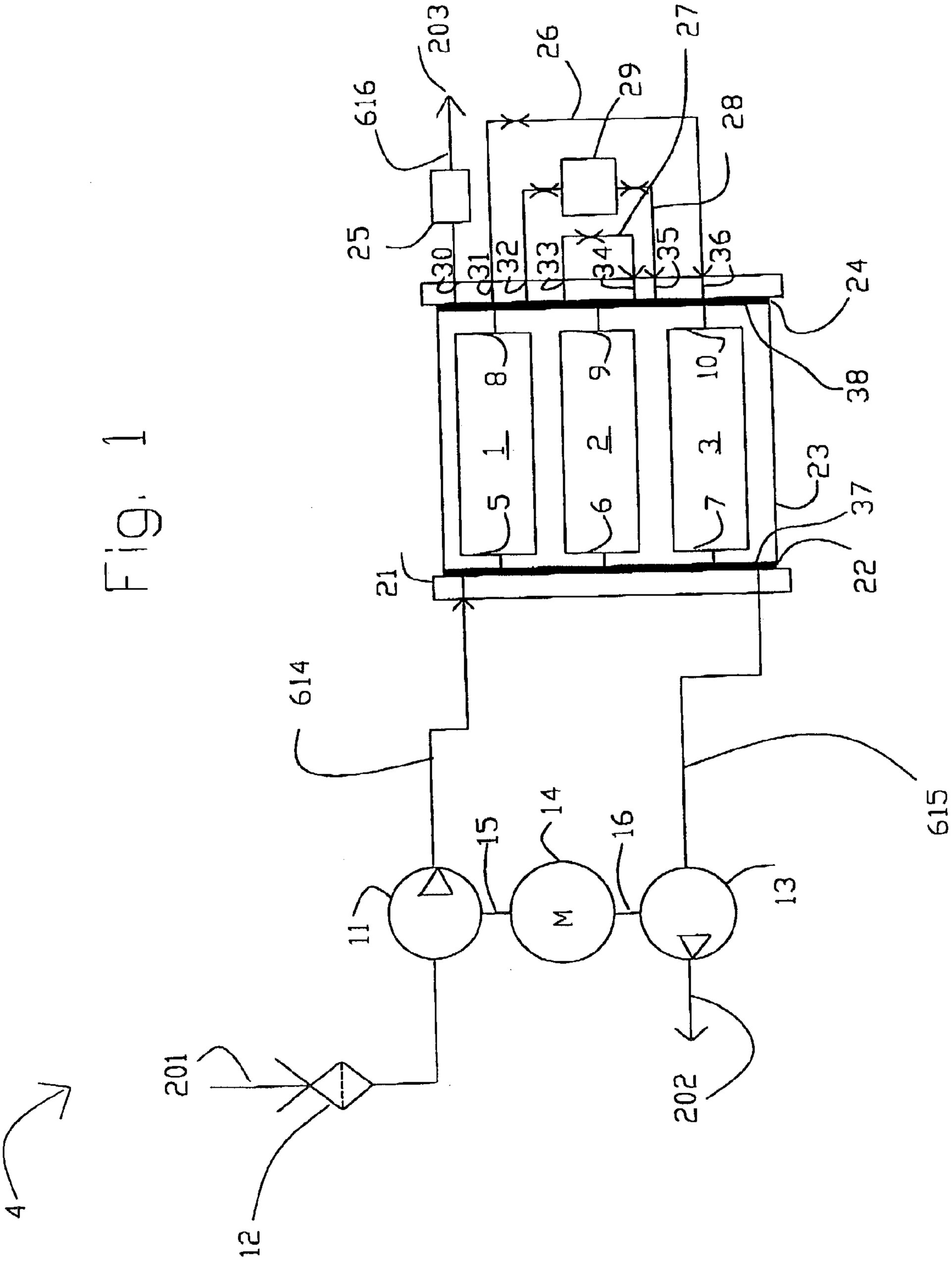
203
26
27
616
29
28
25
30
31
32
33
34
35
36
24
8
9
10
38
1
2
3
5
6
7
23
37
21
22
614
615
15
14
16
11
M
13
201
202
4
12

Fig. 2

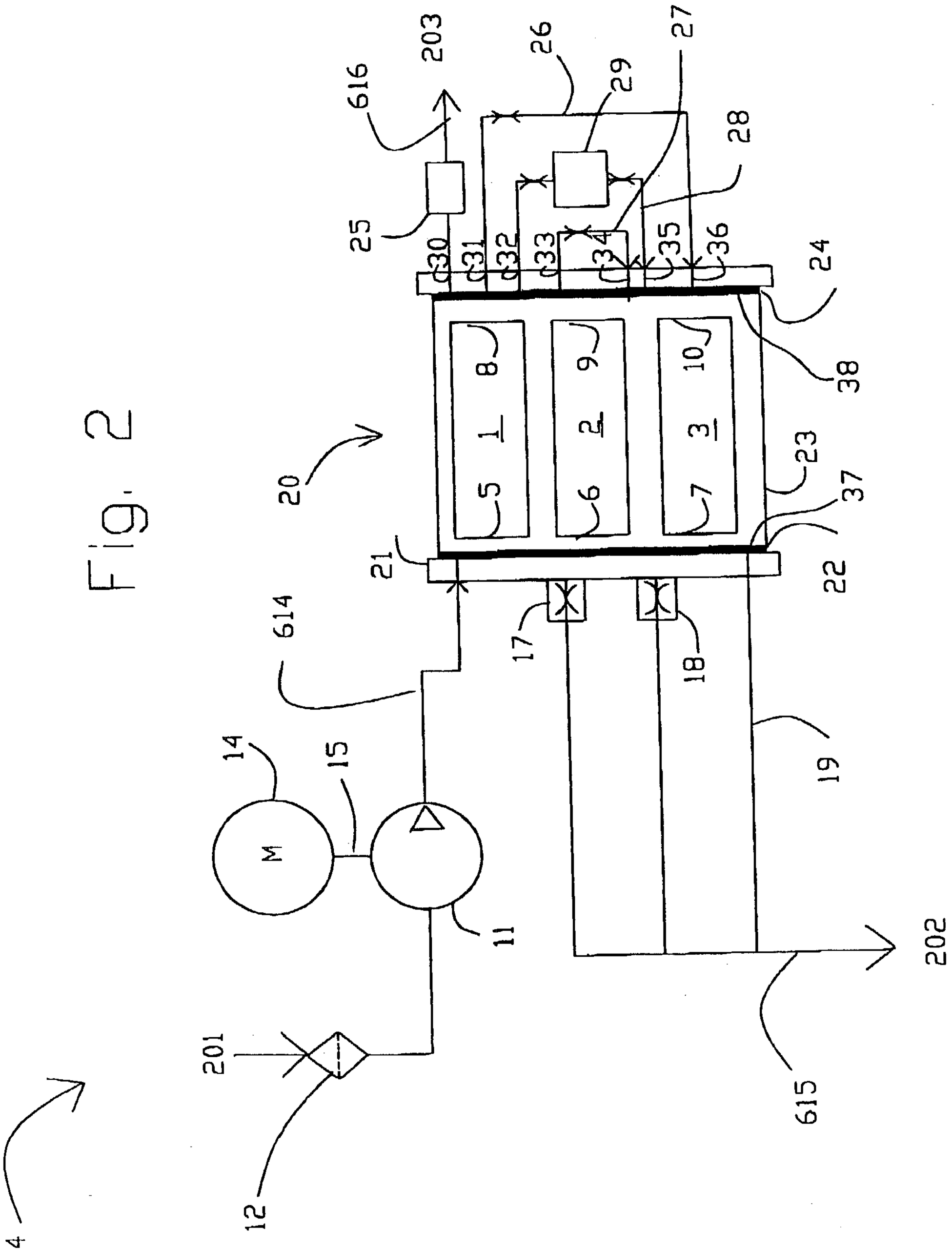
616
203
26
27
29
28
25
30
31
32
33
34
35
36
24
38
23
37
22
21
614
17
18
19
20
1
2
3
5
6
7
8
9
10
14
15
M
11
12
201
202
615

Fig. 3

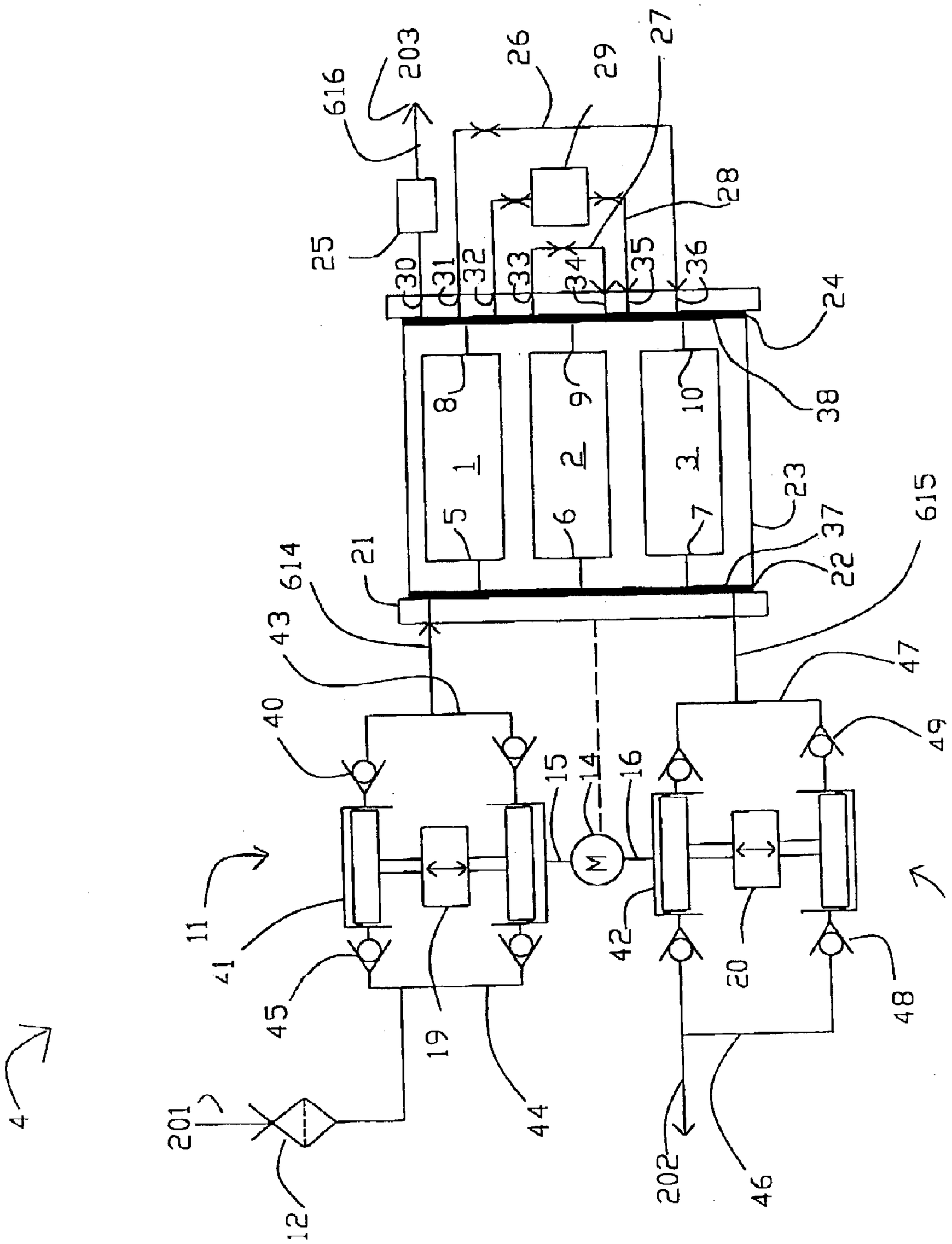
4
201
12
11
41
45
19
44
42
20
202
46
48
43
614
21
40
47
49
615
22
37
23
38
24
616
203
26
29
27
28
25
30
31
32
33
34
35
36
1
2
3
5
6
7
8
9
10
15
14
16
M

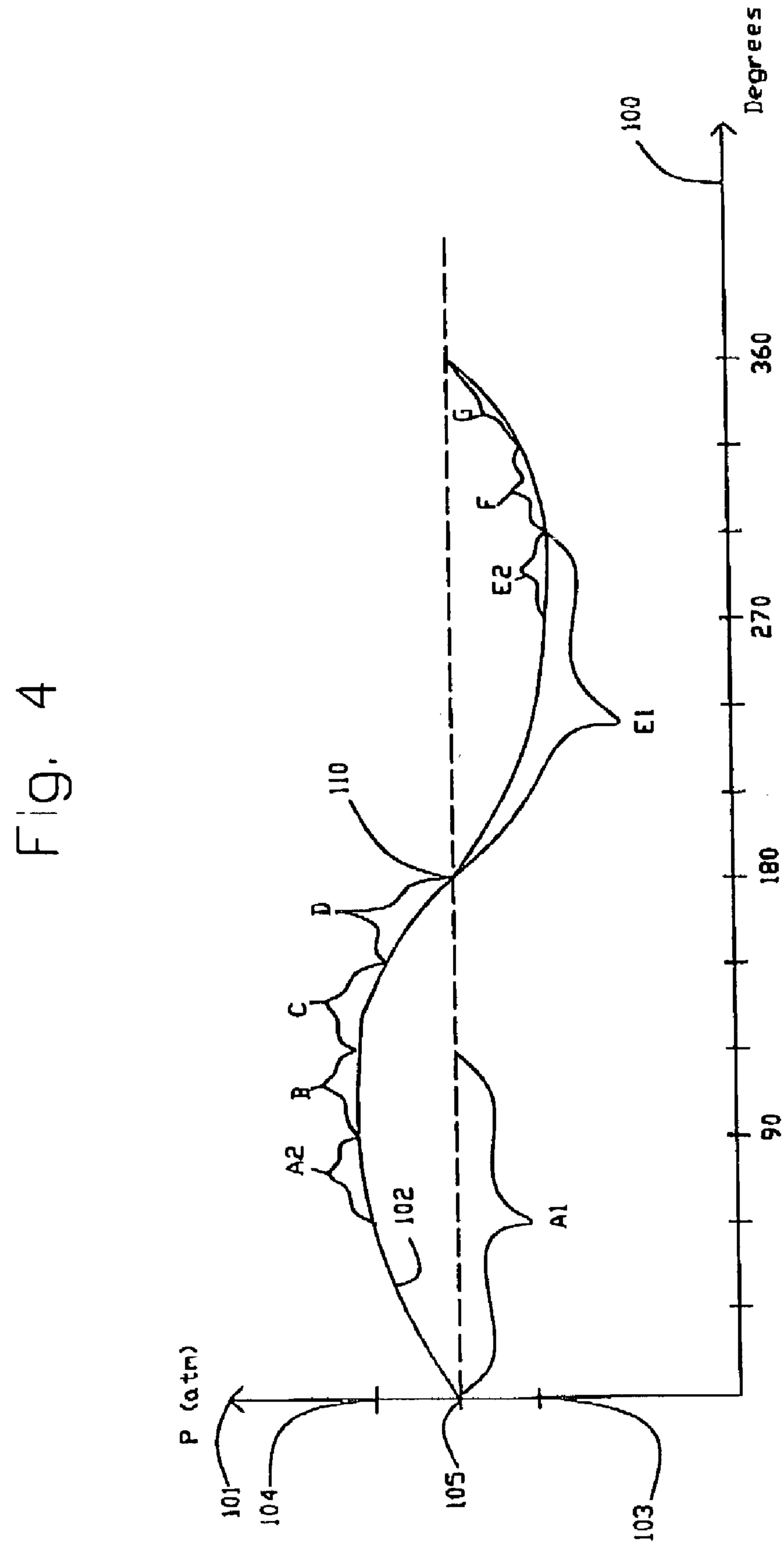
100
Degrees
360
270
180
90
0
110
D
C
B
A2
102
A1
E1
E2
F
G
P (atm)
101
104
105
103

Fig. 4

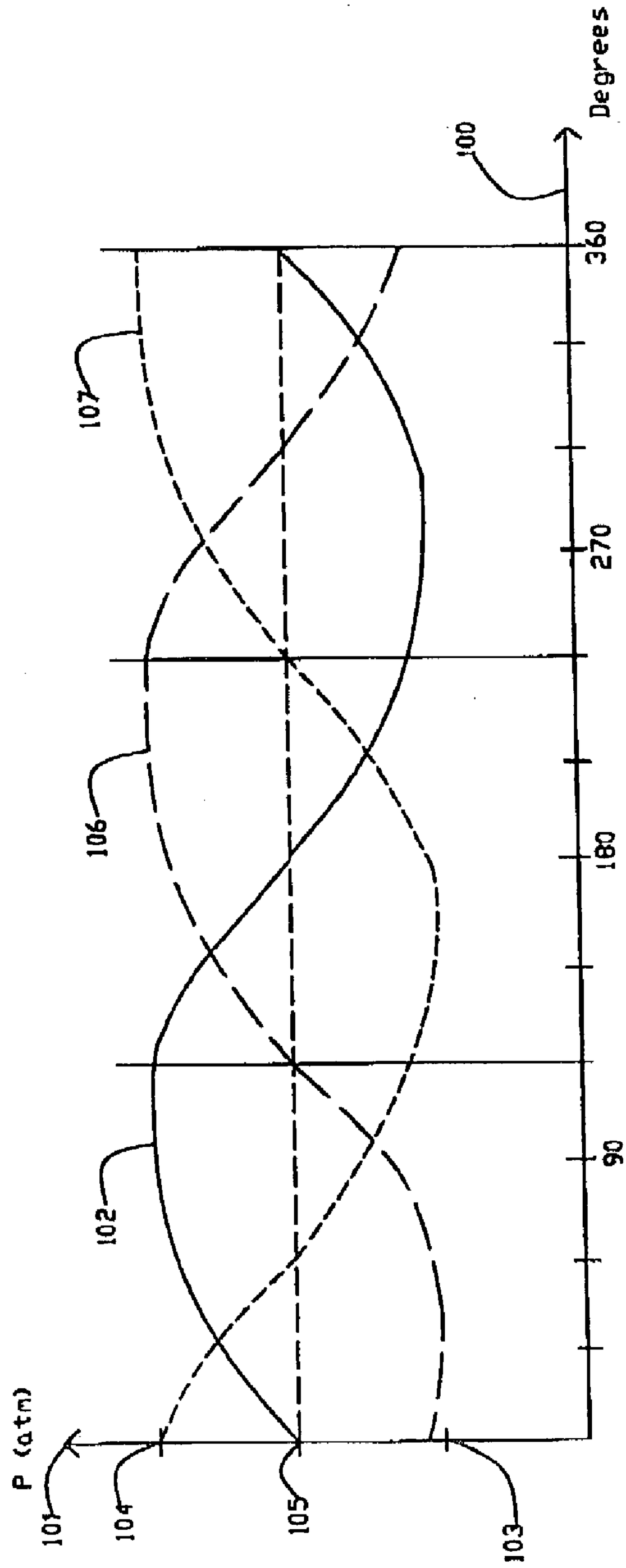

Fig. 5

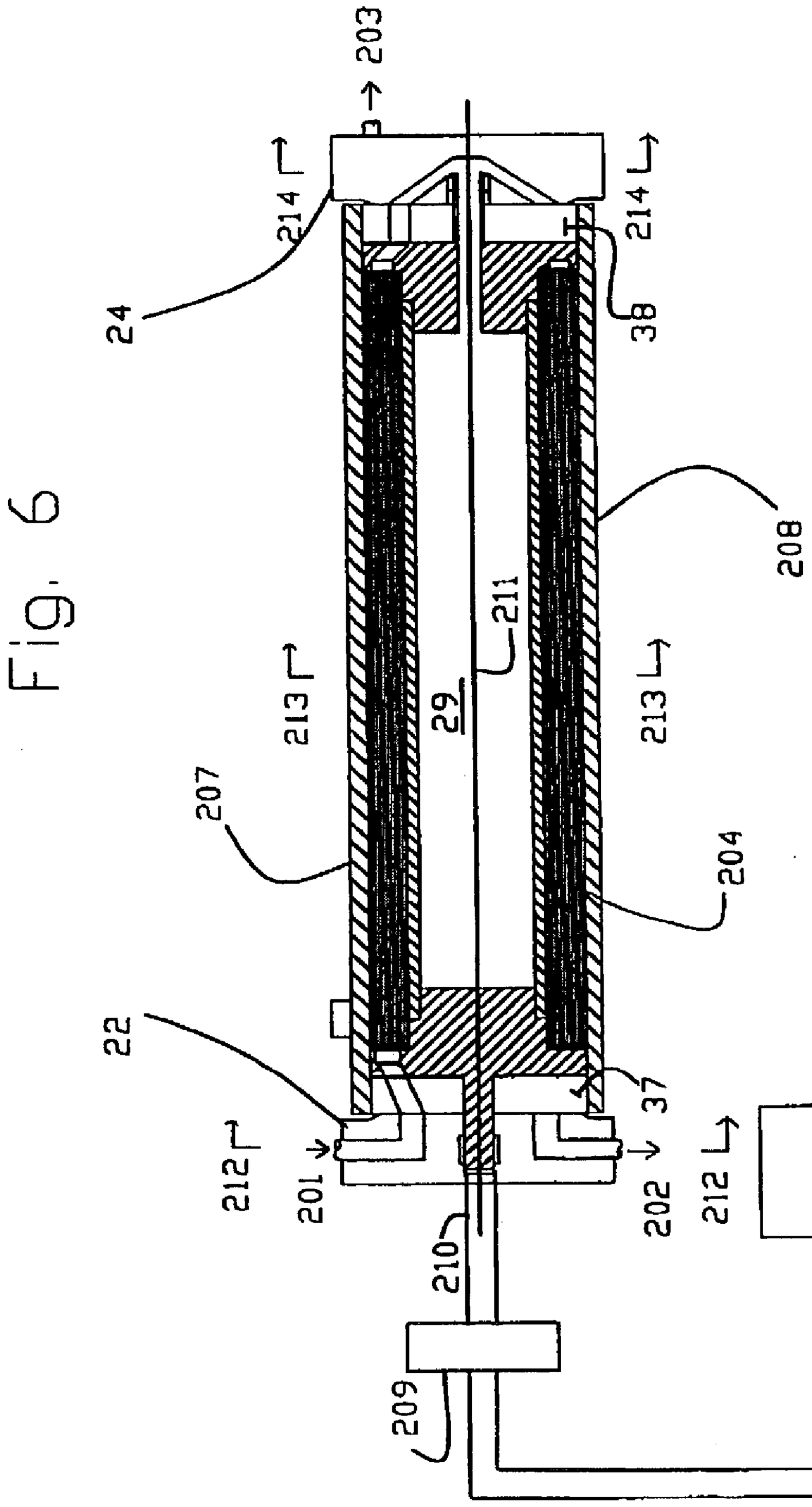
203
214
214
24
38
29
211
208
213
213
207
204
22
212
201
202
37
212
206
210
209

Fig. 6

Fig. 7a

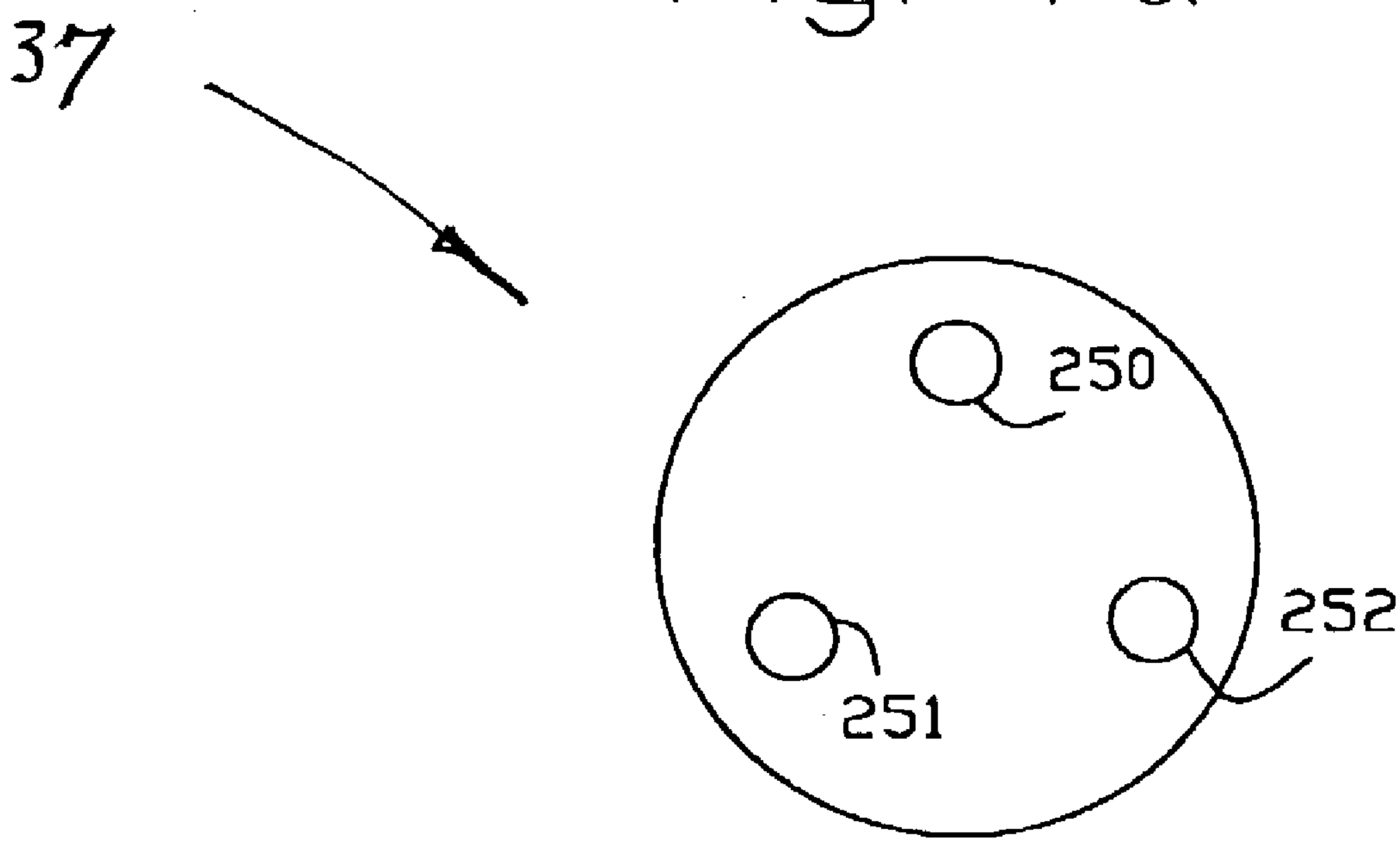

Fig. 7b

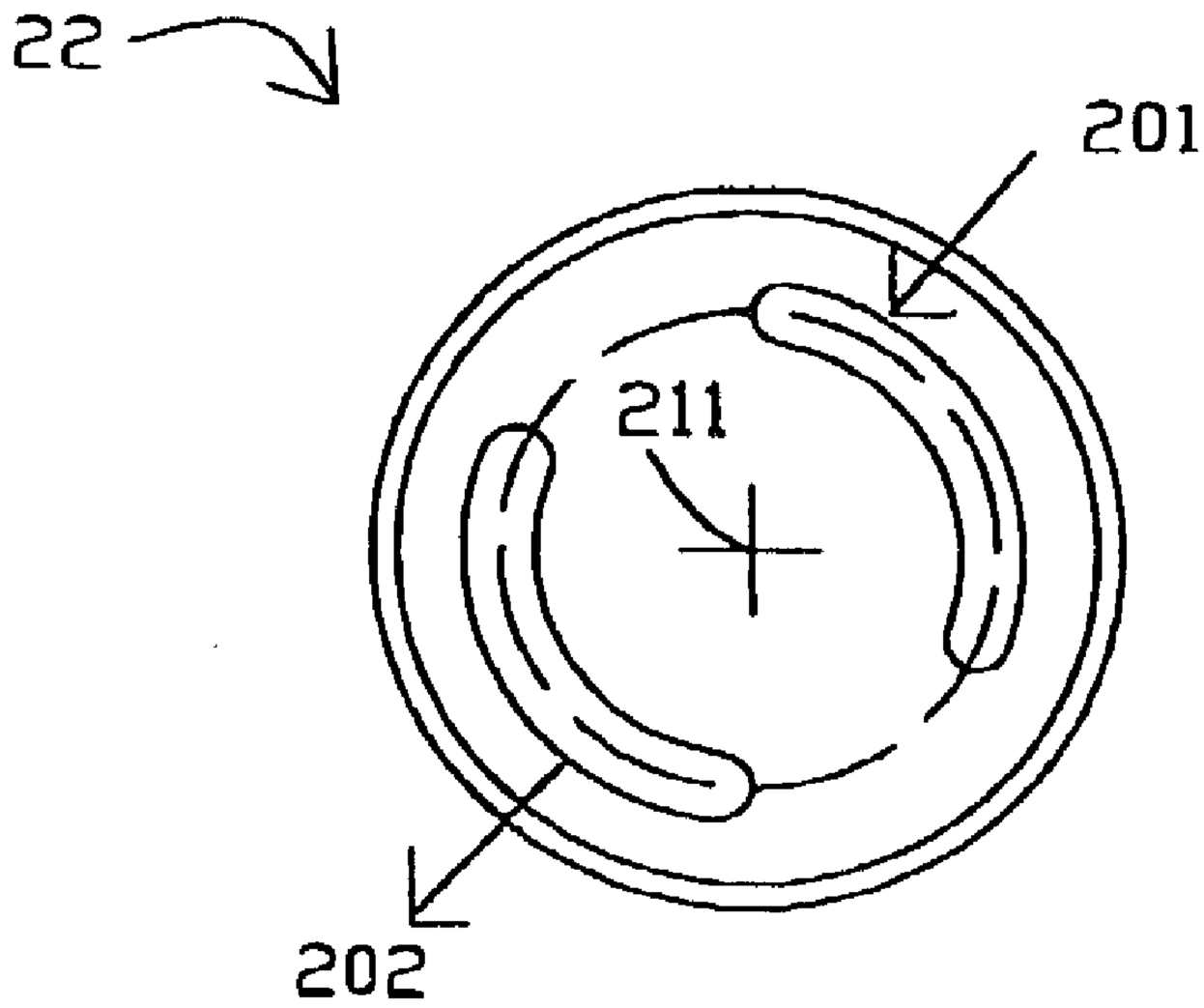

Fig. 8a

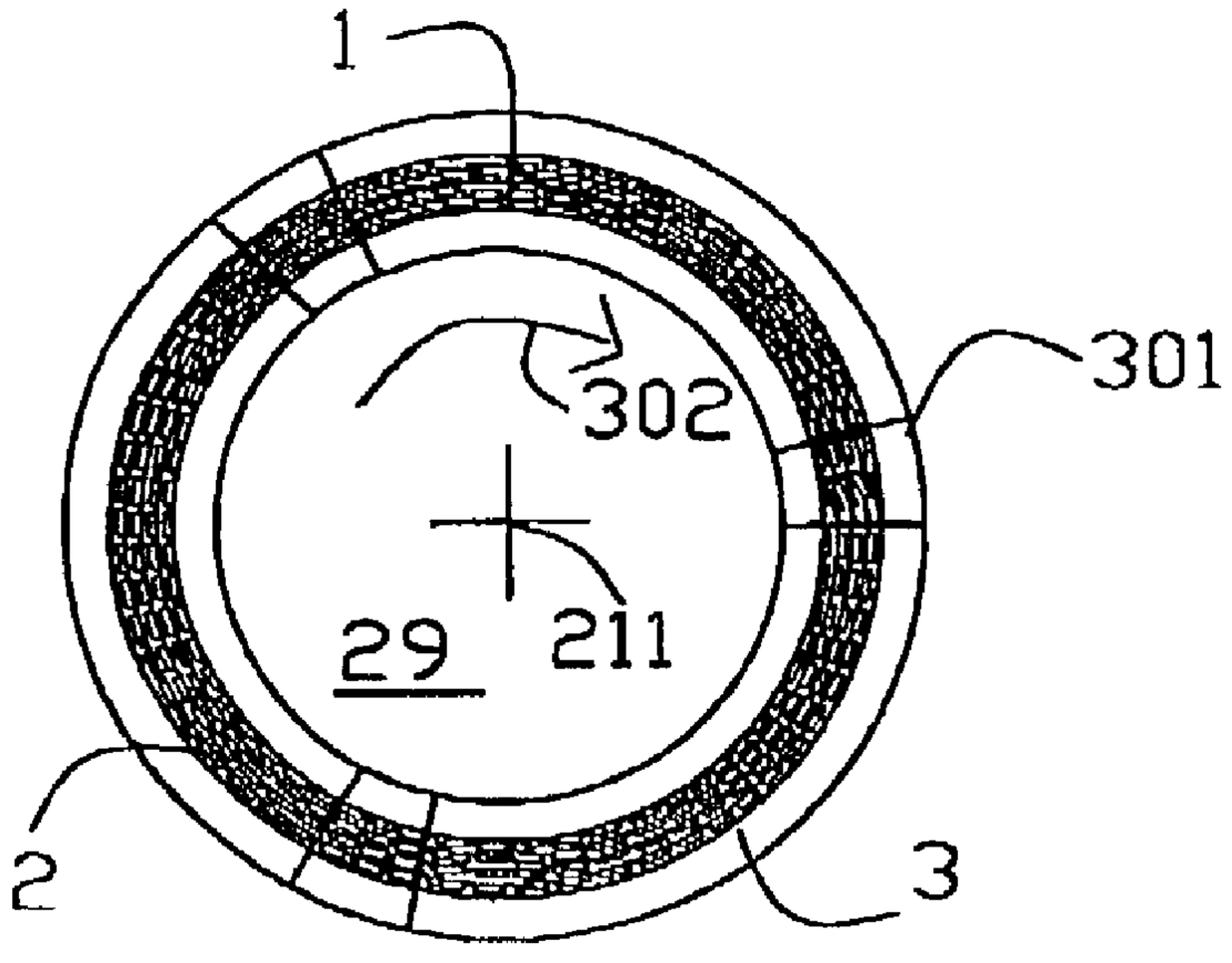

Fig. 8b

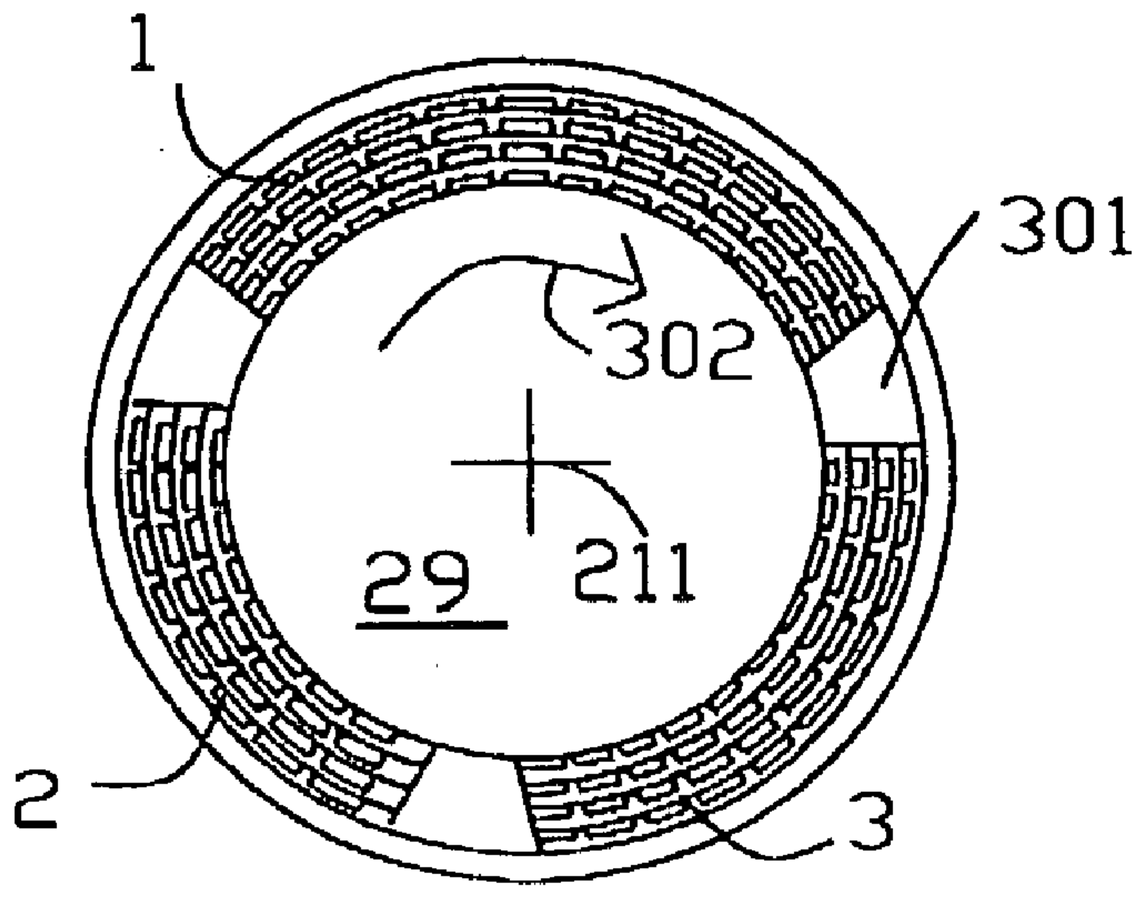

Fig. 9

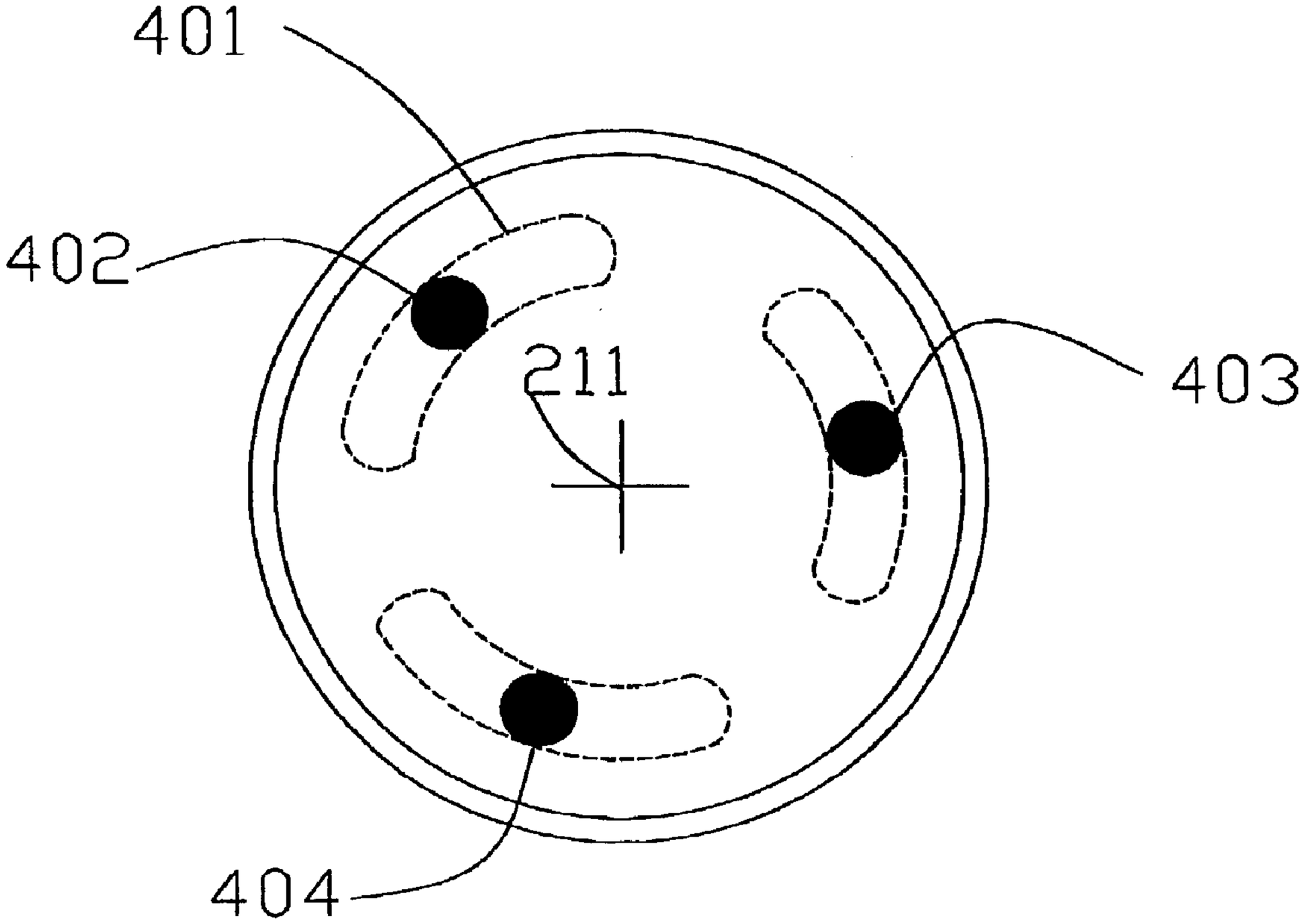

Fig. 10a

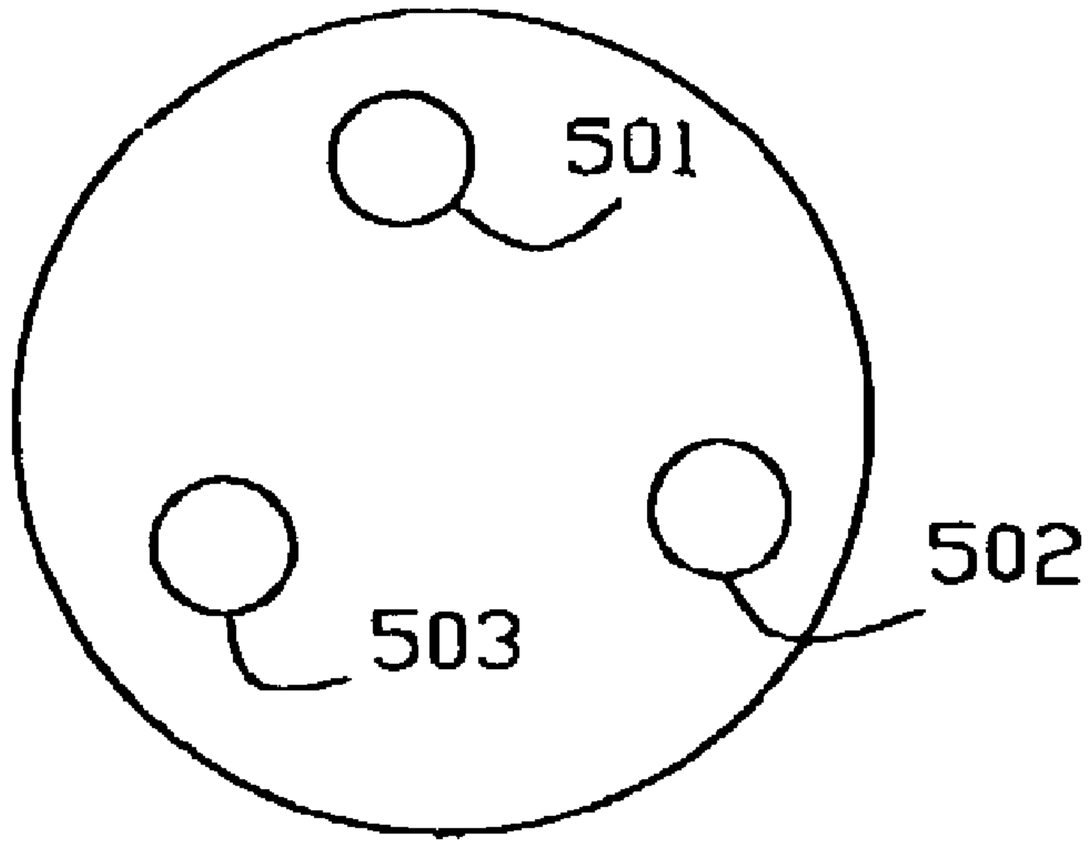

Fig. 10b

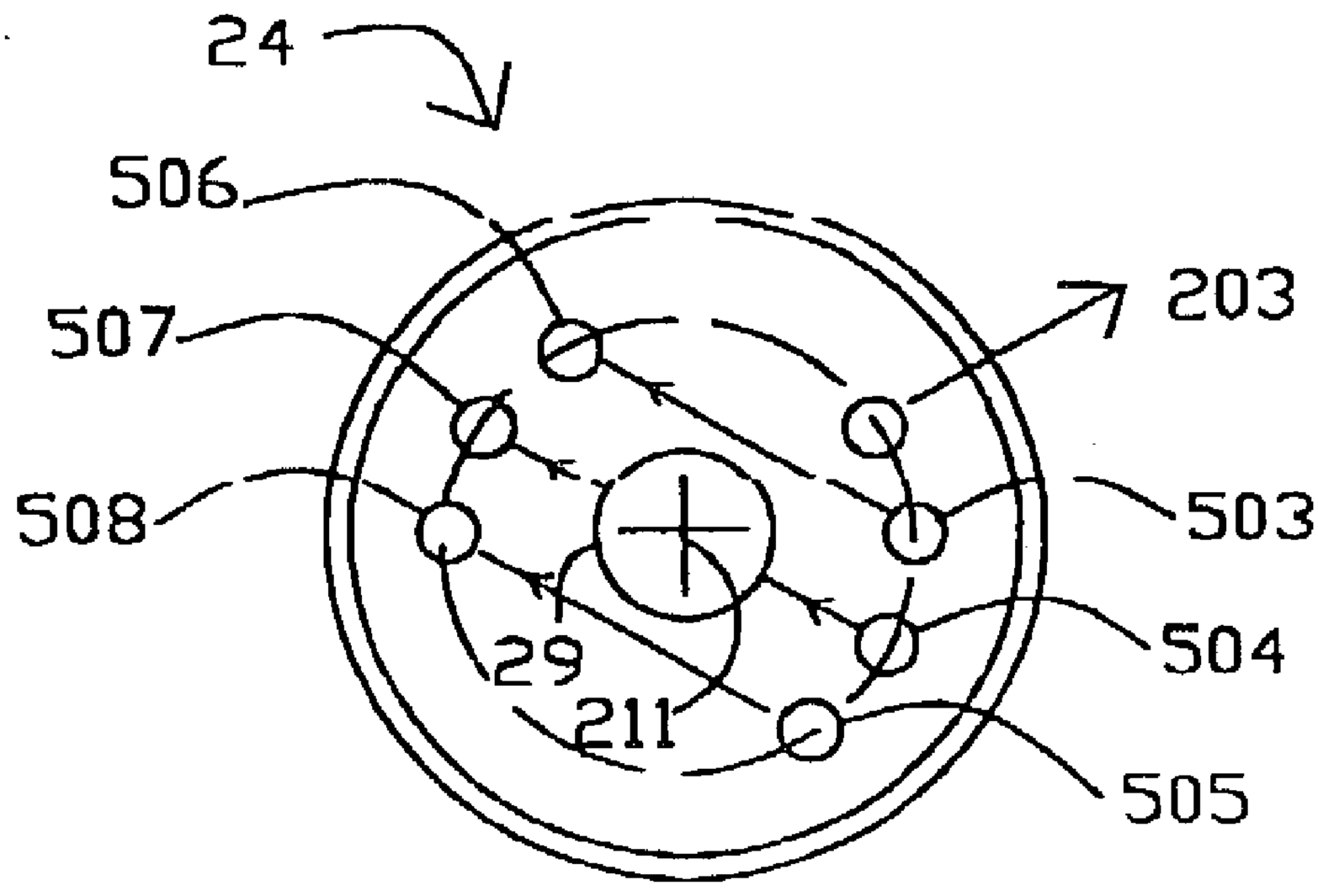

Fig. 11

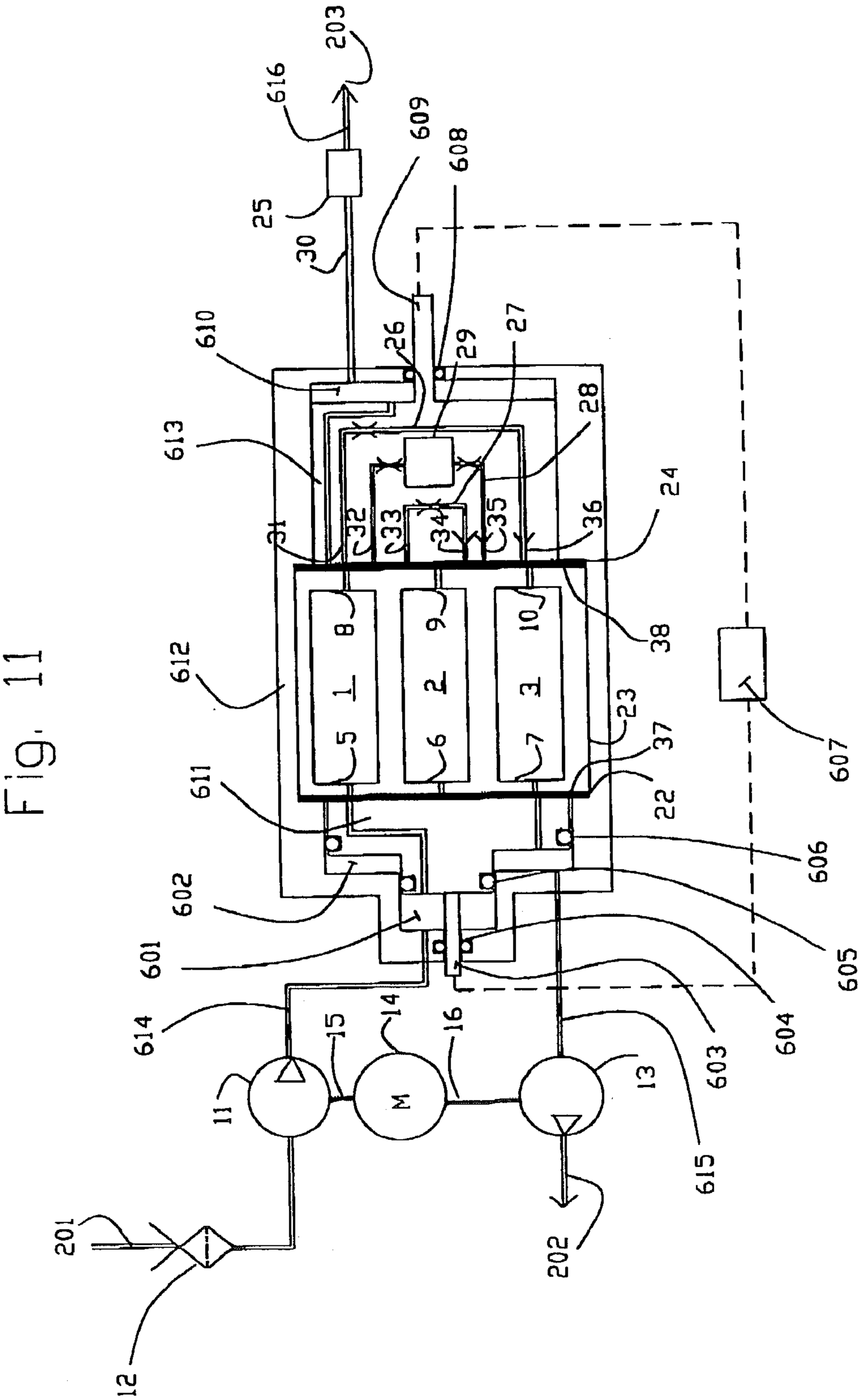
600
12
201
202
11
M
13
14
15
16
603
604
605
606
607
615
601
602
611
22
37
23
612
613
614
610
616
203
609
608
25
30
26
29
27
28
24
36
38
31
32
33
34
35
1
2
3
5
6
7
8
9
10

LIFE SUPPORT OXYGEN CONCENTRATOR

FIELD OF THE INVENTION

[0001] The invention relates to gas separations conducted by pressure swing adsorption (PSA), and particularly to air separation to generate concentrated oxygen or to air purification to remove carbon dioxide or vapour contaminants. In particular, the present invention relates to a rotary valve gas separation system having a plurality of rotating adsorbers disposed therein for implementing a pressure swing adsorption process for separating out the gas fractions.

[0002] Four possible applications of the present invention are:

[0003] (a) Home use medical oxygen concentrators;

[0004] (b) Portable oxygen concentrators;

[0005] (c) Ultra low power oxygen concentrators, e.g. for third world medical clinics; and

[0006] (d) Manually operated oxygen concentrator or air purifier for survival life support.

BACKGROUND OF THE INVENTION

[0007] Gas separation by pressure swing adsorption is achieved by coordinated pressure cycling and flow reversals over an adsorber that preferentially adsorbs a more readily adsorbed component relative to a less readily adsorbed component of the mixture. The total pressure is elevated during intervals of flow in a first direction through the adsorber from a first end to a second end of the adsorber, and is reduced during intervals of flow in the reverse direction. As the cycle is repeated, the less readily adsorbed component is concentrated in the first direction, while the more readily adsorbed component is concentrated in the reverse direction.

[0008] A "light" product, depleted in the more readily adsorbed component and enriched in the less readily adsorbed component, is then delivered from the second end of the adsorber. A "heavy" product enriched in the more strongly adsorbed component is exhausted from the first end of the adsorber. The light product is usually the desired product to be purified, and the heavy product often a waste product, as in the important examples of oxygen separation over nitrogen-selective zeolite adsorbents and hydrogen purification. The heavy product (enriched in nitrogen as the more readily adsorbed component) is a desired product in the example of nitrogen separation over nitrogen-selective zeolite adsorbents. Typically, the feed is admitted to the first end of a adsorber and the light product is delivered from the second end of the adsorber when the pressure in that adsorber is elevated to a higher working pressure. The heavy product is exhausted from the first end of the adsorber at a lower working pressure. In order to achieve high purity of the light product, a fraction of the light product or gas enriched in the less readily adsorbed component is recycled back to the adsorbers as "light reflux" gas after pressure letdown, e.g. to perform purge, pressure equalization or repressurization steps.

[0009] The conventional process for gas separation by pressure swing adsorption uses two or more adsorbers in parallel, with directional valving at each end of each adsorber to connect the adsorbers in alternating sequence to pressure sources and sinks, thus establishing the changes of working pressure and flow direction. The basic pressure swing adsorption process makes inefficient use of applied energy, because of irreversible expansion over the valves while switching the adsorbers between higher and lower pressures. More complex conventional pressure swing adsorption devices achieve some improvement in efficiency by use of multiple "light reflux" steps, both to achieve some energy recovery by pressure equalization, and also desirably to sequence the light reflux steps so that lower purity light reflux gas reenters the second end of the adsorbers first, and higher purity light reflux gas reenters the second end of the adsorbers last, so as to maintain the correct ordering of the concentration profile in the adsorbers.

[0010] The conventional method of supporting the adsorbent is also problematic. There is a need for rigid high surface area adsorbent supports that can overcome the limitations of granular adsorbent and enable much higher cycle frequencies. High surface area laminated adsorbers, with the adsorbent supported in thin sheets separated by spacers to define flow channels between adjacent sheets, formed either as stacked assemblies or as spiral rolls, have been disclosed by Keefer (U.S. Pat. No. 4,968,329 and U.S. Pat. No. 5,082,473).

[0011] U.S. Pat. No. 4,968,329 discloses related gas separation devices with valve logic means to provide large exchanges of fresh feed gas for depleted feed gas. Such large feed exchanges may be required when concentrating one component as a desired product without excessively concentrating or accumulating other components, as in concentrating oxygen from feed air containing water vapour whose excessive concentration and accumulation would deactivate the adsorbent.

[0012] Siggelin (U.S. Pat. No. 3,176,446), Mattia (U.S. Pat. No. 4,452,612), Davidson and Lywood (U.S. Pat. No. 4,758,253), Boudet et al (U.S. Pat. No. 5,133,784), and Petit et al (U.S. Pat. No. 5,441,559) disclose PSA devices using rotary adsorber configurations. Ports for multiple angularly separated adsorbers mounted on a rotor assembly sweep past fixed ports for feed admission, product delivery and pressure equalization. In this apparatus, the relative rotation of the ports provides the function of a rotary distributor valve. All of these prior art devices use multiple adsorbers operating sequentially on the same cycle, with multiport distributor rotary valves for controlling gas flows to, from and between the adsorbers.

[0013] The prior art includes numerous examples of pressure swing adsorption and vacuum swing adsorption devices with three adsorbers operating in parallel. Thus, Hay (U.S. Pat. No. 4,969,935) and Kumar et al (U.S. Pat. No. 5,328,503) disclose vacuum adsorption systems which do not achieve continuous operation of compressors and vacuum pumps connected at all times to one of the three adsorbers. Such operation is achieved in other three adsorber examples provided by Tagawa et al (U.S. Pat. No. 4,781,735), Hay (U.S. Pat. No. 5,246,676), and Watson et al (U.S. Pat. No. 5,411,528), but in each of these latter examples there is some undesirable inversion of the ordering of light product withdrawal and light reflux steps so that process efficiency is compromised.

SUMMARY OF THE INVENTION

[0014] The present invention is intended to enable high frequency operation of pressure swing and vacuum swing adsorption processes, with high energy efficiency and with compact machinery of low capital cost. The invention applies in particular to air separation.

[0015] The invention provides an apparatus for PSA separation of a gas mixture containing a more readily adsorbed component and a less readily adsorbed component, with the more readily adsorbed component being preferentially adsorbed from the feed gas mixture by an adsorbent material under increase of pressure, so as to separate from the gas mixture a heavy product gas enriched in the more readily adsorbed component, and a light product gas enriched in the less readily adsorbed component and depleted in the more readily adsorbed component. The apparatus includes compression machinery cooperating with three adsorbers mounted in a rotary PSA module.

[0016] Each adsorber has a flow path contacting adsorbent material between first and second ends of the flow path. The adsorbers are mounted at equal angular spacings in an adsorber housing, which is engaged in relative rotation with first and second valve bodies to define rotary sealing faces of first and second valves adjacent respectively the first and second ends of the adsorber flow paths. In some preferred embodiments, the adsorber housing is a rotor (the "adsorber rotor") which rotates while the first and second valve bodies together form the stator. In other preferred embodiments, the adsorber housing is stationary, while the first and second valve bodies achieve the valving function. Fluid transfer means are provided to provide feed gas to the first valve body, to remove exhaust gas from the first valve body, and to deliver product gas from the second valve body.

[0017] The first valve admits feed gas to the first end of the adsorbers, and exhausts heavy product gas from the first end of the adsorbers. The second valve cooperates with the adsorbers to deliver light product gas from the second end of the adsorbers, to withdraw light reflux gas from the second end of the adsorbers, and to return light reflux gas to the second end of the adsorbers. The term 'light reflux" refers to withdrawal of light gas (enriched in the less readily adsorbed component) from the second end of the adsorbers via the second valve, followed by pressure let-down and return of that light gas to other adsorbers at a lower pressure via the second valve. The first and second valves are operated so as to define the steps of a PSA cycle performed sequentially in each of the adsorbers, while controlling the timings of flow at specified total pressure levels between the adsorbers and the compression machinery.

[0018] The PSA process of the invention establishes the PSA cycle in each adsorber, within which the total working pressure in each adsorber is cycled between a higher pressure and a lower pressure of the PSA cycle. The higher pressure is superatmospheric, and the lower pressure may conveniently either be atmospheric or subatmospheric. The PSA process also provides intermediate pressures between the higher and lower pressure. The compression machinery of the apparatus in general includes a feed gas compressor and a heavy product gas exhauster. The exhauster would be a vacuum pump when the lower pressure is subatmospheric. When the lower pressure is atmospheric, the exhauster could be an expander, or else may be replaced by throttle means to regulate countercurrent blowdown.

[0019] In the present invention, the feed compressor will typically supply feed gas for feed pressurization of the adsorbers to the first valve means. The exhauster will typically receive heavy product gas for countercurrent blowdown of the adsorbers from the first valve means.

[0020] A buffer chamber is provided to cooperate with the second valve. The buffer chamber provides the "light reflux" function of accepting a portion of the gas enriched in the second component as light reflux gas from a adsorber at the higher pressure and during concurrent blowdown to reduce the pressure from the higher pressure, and then returning that gas to the same adsorber to provide purge at the lower pressure and then to provide light reflux pressurization to increase the pressure from the lower pressure. The light reflux function enables production of the light product with high purity.

[0021] The present invention performs in each adsorber the sequentially repeated steps within the cycle period as follows:

[0022] (A) Feed pressurization and production. Feed gas mixture is admitted to the first end of the adsorber during a feed time interval over approximately ⅓ of the cycle period (0T-T/3), commencing when the pressure within the adsorber is a first intermediate pressure between the lower pressure and the higher pressure, pressurizing the adsorber to the higher pressure (step A1), and then delivering light product gas from the second end (step A2) at a light product delivery pressure which is substantially the higher pressure less minor pressure drops due to flow friction.

[0023] (B) Withdraw from the second end a first light reflux gas enriched in the second component (preferably following step A2 of light product delivery) at approximately the higher pressure during a brief time interval at or near the end of step A (T/3).

[0024] (C) Equalization to buffer chamber. While flow at the first end of the adsorber is stopped during a concurrent blowdown time interval following step B, withdraw a second light reflux gas enriched in the second component as light reflux gas from the second end of the adsorber into the buffer chamber, and depressurizing the adsorber toward a second intermediate pressure between the higher pressure and the lower pressure.

[0025] (D) Withdraw a third light reflux gas from the second end as purge flow for another adsorber, during a brief time interval at approximately the end of step C (T/2).

[0026] (E) Countercurrent blowdown and exhaust. Exhaust a flow of gas enriched in the first component from the first end of the adsorber during an exhaust time interval (T/2-5T/6), in step E1 to depressurize the adsorber from the second intermediate pressure to the lower pressure, and then in step E2 transferring a flow of third light reflux gas from the second end of another adsorber undergoing step D to purge the adsorber at substantially the lower pressure while continuing to exhaust gas enriched in the first component as a heavy product gas.

[0027] (F) Equalization from buffer chamber. While flow at the first end of the adsorber is stopped, supply second light reflux gas from the buffer chamber to the second end of the adsorber. This increases the pressure of the adsorber from substantially the lower pressure to the second intermediate pressure.

[0028] (G) Admit a flow of first light reflux gas from the second end of another adsorber as backfill gas to increase adsorber pressure to the first intermediate pressure for the beginning of step A of the next cycle.

[0029] It will be appreciated by those skilled in the art that alternative light reflux flow patterns may be used. For example, delete steps B and G, or delay step B to follow step A rather than overlap step A so it acts as a pressure equalization step. With appropriate porting of the second valve, the apparatus of this invention may be used to implement the process steps of prior art cycles with three adsorbers, for example as prescribed in any of the above cited U.S. Pat. Nos. 4,781,735; 4,969,935; 5,246,676; 5,328,503; and 5,411,528.

[0030] The process may be controlled by varying the cycle frequency so as to achieve desired purity, recovery and flow rates of the light product gas. Alternatively, the feed flow rate and the light product flow rate may be adjusted at a given cycle frequency, so as to achieve desired light product purity. Preferably, light product flow rate is adjusted to maintain delivery pressure in a light product receiver, by simultaneously varying feed compressor drive speed and the rotational frequency of the PSA module.

[0031] In vacuum embodiments, the first intermediate pressure and second intermediate pressure are typically approximately equal to atmospheric pressure, so that the lower pressure is subatmospheric. Alternatively, the lower pressure may be atmospheric. In air purification applications, the first component is an impurity gas or vapour, the gas mixture is air containing the impurity, and the light product is purified air. In air separation applications, the first component is nitrogen, the second component is oxygen, the adsorbent material includes a nitrogen-selective zeolite, the gas mixture is air, and the light product is enriched oxygen.

[0032] In preferred embodiments of the invention, the adsorbent is supported in the form of layered adsorbent or "adsorbent laminate," formed from flexible adsorbent sheets. The adsorbent sheets are thin sheets of adsorbent with a composite reinforcement, or as an inert sheets or foil coated with the adsorbent. Flow channels are established by spacers forming parallel channels between adjacent pairs of sheets. The channel width between adjacent adsorbent sheets of the experimental adsorbers has been in the range of 50% to 100% of the adsorbent sheet thickness. This "adsorbent laminate" configuration has much lower pressure drop than packed adsorbers, and avoids the fluidization problem of packed adsorbers. The adsorbent sheets are typically in the range of 100 to 175 microns thick. The sheet-laminate provides desirable compliance to accommodate stacking or rolling errors, and spacer systems provide the necessary stability against unrestrained deflections or distortions that would degrade the uniformity of the flow channels between adjacent layers of adsorbent sheet.

[0033] According to one aspect of the invention there is provided process for pressure swing adsorption separation of a feed gas mixture containing a more readily adsorbed component and a less readily adsorbed component, with the more readily adsorbed component being preferentially adsorbed from the feed gas mixture by an adsorbent material under increase of pressure, so as to separate from the feed gas mixture a heavy product gas enriched in the more readily adsorbed component and a light product gas enriched in the less readily adsorbed component; providing for the process a cooperating set of three adsorbers within a rotor and equally spaced angularly about the axis defined by rotation of the rotor relative to a stator, and rotating the rotor so as to generate within each adsorber cyclic variations of pressure and flow at a cyclic period defined by the frequency of rotation along a flow path contacting the adsorbent material between first and second ends of the adsorber, the cyclic variations of pressure extending between a higher pressure and a lower pressure of the process; rotating the rotor so that the first ends of the adsorbers successively communicate to feed and exhaust ports provided in a first valve surface between the rotor and the stator, and the second ends of the adsorbers successively communicate to a light product port, to light reflux exit ports and to light reflux return ports provided in a second valve surface between the rotor and the stator; the process including for each of the adsorbers in turn:

[0034] (a) supplying feed gas mixture at a feed pressure through the feed port to the adsorber over a feed interval which is substantially ⅓ of the cycle period so as to pressurize the adsorber to substantially the higher pressure, and then to deliver light product gas from the light product port at substantially the higher pressure less flow frictional pressure drops;

[0035] (b) withdrawing light reflux gas enriched in the less readily adsorbed component from the light reflux exit ports, in part to depressurize that adsorber after the feed interval;

[0036] (c) withdrawing second product gas at an exhaust pressure through the exhaust port from the adsorber over an exhaust interval which is substantially ⅓ of the cycle period so as to depressurize that adsorber to substantially the lower pressure while delivering the second product gas; and

[0037] (d) returning light reflux gas enriched in the less readily adsorbed component from the light reflux return ports so as to purge the adsorber in the latter part of the exhaust interval and then to partially repressurize the adsorber prior to the next feed interval,

[0038] so that feed gas is continuously supplied to substantially one adsorber at time, and exhaust gas is continuously removed from substantially one adsorber at a time.

[0039] According to another aspect of the invention there is provided process for pressure swing adsorption separation of a feed gas mixture containing a more readily adsorbed component and a less readily adsorbed component, with the more readily adsorbed component being preferentially adsorbed from the feed gas mixture by an adsorbent material under increase of pressure, so as to separate from the feed gas mixture a heavy product gas enriched in the more readily adsorbed component and a light product gas enriched in the less readily adsorbed component; providing for the process a cooperating set of three adsorbers within a rotor and equally spaced by 120° angular separation about the axis defined by rotation of the rotor relative to a stator, and rotating the rotor so as to generate within each adsorber cyclic variations of pressure and flow at a cyclic period defined by the frequency of rotation along a flow path contacting the adsorbent material between first and second ends of the adsorber, the cyclic variations of pressure extending between a higher pressure and a lower pressure of the process; rotating the rotor so that the first ends of the

adsorbers successively communicate to feed and exhaust ports provided in a first valve surface between the rotor and the stator, and the second ends of the adsorbers successively communicate to a light product port, to first, second and third light reflux exit ports and to first, second and third light reflux return ports provided in a second valve surface between the rotor and the stator; the process including for each of the adsorbers in turn the following cyclical steps in sequence:

[0040] (a) supplying feed gas mixture at a feed pressure through the feed port to the adsorber over a feed interval which is substantially 1/3 of the cycle period so as to pressurize the adsorber to substantially the higher pressure, and then to deliver light product gas from the light product port at substantially the higher pressure less flow frictional pressure drops;

[0041] (b) withdrawing a first light reflux gas enriched in the less readily adsorbed component from the first light reflux exit port at about the end of the feed interval;

[0042] (c) withdrawing a second light reflux gas enriched in the less readily adsorbed component from the first light reflux exit port to depressurize that adsorber after the feed interval;

[0043] (d) withdrawing a third light reflux gas enriched in the less readily adsorbed component from the first light reflux exit port to further depressurize that adsorber;

[0044] (e) withdrawing second product gas at an exhaust pressure through the exhaust port from the adsorber over an exhaust interval which is substantially ⅓ of the cycle period so as to further depressurize that adsorber to substantially the lower pressure while delivering the second product gas;

[0045] (f) returning third light reflux gas from the third light reflux return port which is receiving that gas after pressure letdown from another adsorber (whose phase is leading by 120°), so as to purge the adsorber in the latter part of the exhaust interval;

[0046] (g) returning second light reflux gas from the second light reflux return port so as to partially repressurize the adsorber prior to the next feed interval;

[0047] (h) returning first light reflux gas from the first light reflux return port which is receiving that gas after pressure letdown from another adsorber (whose phase is lagging by 120°), so as to further repressurize the adsorber prior to the next feed interval; and

[0048] (i) cyclically repeating the above steps,

[0049] so that feed gas is continuously supplied to substantially one adsorber at time, and exhaust gas is continuously removed from substantially one adsorber at a time.

[0050] According to a further aspect of the invention there is provided process for pressure swing adsorption separation of a feed gas mixture containing a more readily adsorbed component and a less readily adsorbed component, with the more readily adsorbed component being preferentially adsorbed from the feed gas mixture by an adsorbent material under increase of pressure, so as to separate from the feed gas mixture a heavy product gas enriched in the more readily adsorbed component and a light product gas enriched in the less readily adsorbed component; providing for the process a cooperating set of three adsorbers, and generating within each adsorber cyclic variations of pressure and flow at a cyclic period defined by the frequency of rotation along a flow path contacting the adsorbent material between first and second ends of the adsorber and with the cyclic phase 120° staggered for each adsorber, the cyclic variations of pressure extending between a higher pressure and a lower pressure of the process; the process including for each of the adsorbers in turn the following cyclical steps in sequence:

[0051] (a) supplying feed gas mixture to the first end of the adsorber over a feed interval which is substantially ⅓ of the cycle period so as to pressurize the adsorber to substantially the higher pressure, and then to deliver light product gas from the second end of the adsorber at substantially the higher pressure less flow frictional pressure drops,

[0052] (b) withdrawing a first light reflux gas enriched in the less readily adsorbed component from the second end of the adsorber at about the end of the feed interval;

[0053] (c) withdrawing a second light reflux gas enriched in the less readily adsorbed component from the second end of the adsorber to depressurize that adsorber after the feed interval, and delivering the second light reflux gas to a buffer chamber;

[0054] (d) withdrawing a third light reflux gas enriched in the less readily adsorbed component from the second end of the adsorber to further depressurize that adsorber;

[0055] (e) withdrawing second product gas at an exhaust pressure from the first end of the adsorber over an exhaust interval which is substantially ⅓ of the cycle period so as to further depressurize that adsorber to substantially the lower pressure while delivering the second product gas;

[0056] (f) supplying third light reflux gas from another adsorber (whose phase is leading by 120°) to the second end of the adsorber, so as to purge the adsorber during the latter part of the exhaust interval;

[0057] (g) supplying second light reflux gas from the buffer chamber to the second end of the adsorber, so as to partially repressurize the adsorber prior to the next feed interval;

[0058] (h) supplying third light reflux gas from another adsorber (whose phase is leading by 120°) to the second end of the adsorber, so as to further repressurize the adsorber prior to the next feed interval; and

[0059] (i) cyclically repeating the above steps,

[0060] while feed gas is continuously supplied to substantially one adsorber at time, and exhaust gas is continuously removed from substantially one adsorber at a time.

[0061] According to another aspect of the invention there is provided an apparatus for pressure swing adsorption separation of a gas mixture containing a more readily

adsorbed component and a less readily adsorbed component, with the more readily adsorbed component being preferentially adsorbed from the gas mixture by an adsorbent material under increase of pressure between a lower pressure and a higher pressure, so as to separate from the gas mixture a heavy product gas enriched in the more readily adsorbed component and a light product gas depleted in the more readily adsorbed component; the apparatus including an adsorber rotor cooperating with a stator mutually defining the rotational axis of the rotor and with rotor drive means to rotate the rotor at a rotational period which defines a pressure swing adsorption cycle period, the rotor containing a cooperating set of three adsorbers equally angularly spaced about the rotational axis, each adsorber having a flow path contacting the adsorbent material between first and second ends of the adsorber, the first ends of the adsorbers communicating by first apertures to a first valve surface between the rotor and the stator, and the second ends of the adsorbers communicating by second apertures to a second valve surface between the rotor and the stator; the first valve surface having feed and exhaust ports engaging successively in fluid communication with the first apertures, and the first valve surface having a light product port, and first, second and third light reflux exit ports and first second and third light reflux return ports engaging successively in fluid communication with the second apertures; the apparatus further including feed supply means communicating to the feed port and second product exhaust means communicating to the exhaust port; the first and third light reflux exit ports communicating to directly to the first and third light reflux return ports respectively, and the second light reflux exit port communicating to a buffer chamber communicating in turn to the second light reflux return port; and the angular positions and widths of the ports and apertures being configured so that for each adsorber in sequence the following steps are performed:

[0062] (a) the first aperture of the adsorber is opened to the feed port through which feed gas mixture is supplied by the feed supply means over a feed interval of substantially ⅓ of the cycle period so as to pressurize the adsorber to substantially the higher pressure, while the second aperture of the adsorber is then opened to the light product port in the feed interval so as to deliver light product gas at substantially the higher pressure less flow frictional pressure drops;

[0063] (b) the second aperture of the adsorber is opened sequentially to the first, second and third light reflux exit ports so as to deliver light reflux gas enriched in the less readily adsorbed component and to depressurize the adsorber after the feed interval;

[0064] (c) the first aperture of the adsorber is opened to the exhaust port through which second product gas is exhausted by the second product exhaust means at an exhaust pressure over an exhaust interval which is substantially ⅓ of the cycle period so as to depressurize that adsorber to substantially the lower pressure and to deliver the second product gas; (d) the second aperture of the adsorber is opened sequentially to the third, second and first light reflux return ports so as to purge the adsorber in the latter part of the exhaust interval and then to partially repressurize the adsorber prior to the next feed interval.

[0065] Further objects and advantages of the invention will become apparent from the description of preferred embodiments of the invention below.

BRIEF DESCRIPTION OF THE DRAWINGS

[0066] The preferred embodiments of the present invention will now be described, with reference to the drawings, in which:

[0067] **FIG. 1** shows a simplified schematic of a rotary vacuum oxygen concentrator with three adsorbers, a feed air compressor, and an exhaust vacuum pump.

[0068] **FIG. 2** shows a schematic of a rotary positive pressure oxygen concentrator with three adsorbers, with each adsorber communicating to a feed air compressor.

[0069] **FIG. 3** shows a more detailed schematic of a rotary vacuum oxygen concentrator apparatus with three adsorbers, with each adsorber communicating to a feed air compressor, and an exhaust vacuum pump.

[0070] **FIG. 4** shows the gas flow pattern and pressure pattern associated with an adsorber of the apparatus of **FIG. 1**.

[0071] **FIG. 5** shows the pressure pattern for all three adsorbers, in the format to which the invention shall be applied.

[0072] **FIG. 6** shows a cross section of a rotary module of an oxygen concentrator, with each of the two valve ends being shown at a different point in the cycle.

[0073] FIGS. **7** to **10** show closer views of the stator and rotor valve faces.

[0074] **FIG. 11** shows an embodiment similar to **FIG. 1** but with the adsorber housing stationary while the first and second valve bodies rotate.

DETAILED DESCRIPTION OF THE PREFERRED EMBODIMENTS

[0075] **FIGS. 1, 2** and **3**

[0076] An oxygen concentrator according to the invention has three adsorbers **1, 2** and **3** in apparatus **4** (the rotary PSA module); the adsorbers having respectively first ends **5, 6** and **7**, and second ends **8, 9** and **10**. The PSA cycle is performed in the three adsorbers, with a phase shift of 120° between the adsorbers in the sequence of adsorbers **1, 2** and then **3**. **FIGS. 1 and 3** show vacuum assisted embodiments, while **FIG. 2** shows a positive pressure embodiment without vacuum assist.

[0077] Compressor **11** is provided to draw feed air through inlet filter **12** from feed **201** and conduit **614**, and to supply compressed feed air to the adsorbers through first ends **5, 6** and **7**. In **FIGS. 1 and 3**, an exhauster **202** as vacuum pump **13** is provided to exhaust nitrogen enriched air waste along piping **615** from second ends **8, 9** and **10**. Motor **14** is provided to drive compressor **11** by shaft **15** and vacuum pump **13** by shaft **16**. Product **203** is expelled from piping **616** leading from second ends **8, 9** and **10**.

[0078] **FIG. 2** shows a rotary positive pressure PSA oxygen concentrator. In this embodiment, the vacuum pump **13** is replaced with exhaust conduits incorporating throttle orifices **17** and **18** for controlled pressure release during

countercurrent blowdown, and a low pressure exhaust conduit **19** exhausting directly to atmosphere.

[**0079**] Apparatus **4** includes a rotary adsorber module **20** including a stator **21**, first stator valve face **22**, rotor **23** and second stator valve face **24**. Product delivery valve **25** delivers product. Purge is recycled through conduit **26**, while backfill is transferred through conduit **27**. Equalization occurs through conduit **28** and through buffer chamber **29**.

[**0080**] In this embodiment and those shown **FIGS. 2 and 3**, the adsorber housing body rotates and is referred to as the rotor, while the first and second valve bodies are the stator and are referred to as the first and second valve faces.

[**0081**] **FIG. 3** shows a specific example of a two-cylinder double acting piston machine with the two pistons operating in opposite phase. It shows a more detailed look at the compressor and vacuum pump assemblies. The filtered air from inlet air filter **12** travels through the inlet check valve **45** and enters the feed chamber **41**. It then is expelled through discharge check valve **40**, making its way to the stator **21**. Compressor intake manifold **44** collects the air to be used for compression. Compressor exhaust manifold **43** provides the piping for the exhaust air from the compressor.

[**0082**] Exhaust chamber **42** collects the exhaust from the PSA unit. Pump intake manifold **47** and pump exhaust manifold **46** are the piping assemblies that accomplish the air transfer for the pump. Inlet check valve **49** regulates the flow of exhaust into the exhaust chamber **42**. Discharge check valve **48** regulates the exiting stream.

[**0083**] If the pistons are reciprocating at a frequency much greater than the frequency of the rotor, then the system is simply a piston compressor embodiment as in **FIG. 1**. However, an alternative is to synchronize piston reciprocation in both frequency and phase with the PSA cycle so that a complete feed step "A1" is accomplished by a simple stroke of a compressor piston, and an exhaust step "E1" is accomplished by a single stroke of a vacuum pump piston. The reciprocating frequency of the compressor and vacuum is set to be exactly 1.5 times the frequency of the cycle. Pressure variations within the PSA cycle are thus coordinated with those within the compressor and vacuum pump cylinders, enabling an improvement in efficiency and substantially eliminating pressure and flow pulsations extraneous to the PSA cycle itself.

[**0084**] These actions are facilitated by reciprocating crank drives **50** and **51**. This is useful for use in manual drives (manual or foot pedal power with a pulley linkage between the motor and the rotor). The manual apparatus could be used in emergency situations such as at altitude or in confined spaces such as in submarines or in mine shafts.

[**0085**] Furthermore, power consumption is reduced since the compressor **11** and vacuum pump **13** each follow the changing pressure of the adsorber for respectively feed pressurization and countercurrent blowdown steps. Thus, the average working pressure across each of the compressor **11** and vacuum pump **13** is much less than the maximum working pressure.

[**0086**] **FIGS. 4 and 5**

[**0087**] **FIGS. 4 and 5** show the 360° position variation of the gas flow over a cycle period in the adsorbers of the apparatus of **FIGS. 1 and 3**. **FIG. 4** shows the cycle for adsorber **1**, while **FIG. 5** shows the cycle for all three adsorbers. Note that the three adsorbers charted in **FIG. 5** are 120° out of phase from each other.

[**0088**] The horizontal axis **100** of **FIG. 4** represents position, in 30° fractions of the cycle period. The vertical axis **101** represents the working pressure in adsorber **1**.

[**0089**] Curve **102** shows the position variation of the flow path through the valve face plates, with the system pressure cycling between higher pressure **104** and the lower pressure **103**, **105** and **110** are the intermediate pressures in the cycle.

[**0090**] The cycle is divided into six process steps.

[**0091**] 1. The feed pressurization step extends over the feed time interval from positions 0° degrees to 120° of the cycle period on horizontal axis **100**. At the beginning of the cycle (0°), feed gas is fed through inlet filter **12** to compressor **11** and the first end of the adsorbers, bringing the system to its higher pressure **104**. The feed step includes feed from first intermediate pressure **105** to the higher pressure **104**. Typically, the first intermediate pressure is nominally atmospheric pressure.

[**0092**] 2. A and B: Feed with production and production for backfill (pressurization with gas enriched in the second component). In step A, between 60° and 90°, light product gas is withdrawn from the second end of adsorber **1** through the light product port. Between 90° and 120° (step B), light reflux is withdrawn from the second end of adsorber **1** to backfill adsorber **2**.

[**0093**] 3. C and D: The concurrent blowdown step extends over the concurrent blowdown interval from 120° to 180°. Between 120° and 150° (step C), light reflux gas is withdrawn from the second end of adsorber **1** to equalize the buffer chamber **29**. During 150° to 180° (step D), light reflux gas is removed from the second end of adsorber **1** to purge adsorber **3**. The concurrent blowdown step begins at substantially the higher pressure **104** and ends at a second intermediate pressure **110**, which typically may be approximately equal to the first intermediate pressure **105**.

[**0094**] 4. E1: The countercurrent blowdown (to exhaust) interval E1 extends from 180° to 300°, bringing the system down from second intermediate pressure **110** to its lower pressure **103**.

[**0095**] 5. E2: Purge to exhaust. During step E2, gas is removed between 270°-300° from the second end of adsorber **2** to purge adsorber **1**. Exhaust is removed from the first end of adsorber **1** from 270°-300°.

[**0096**] 6. F and G: The countercurrent re-pressurization step extends from 300° to 360°. The cycle between 300°-330° (step F) equalizes the second end of adsorber **1** from the buffer chamber **29**. The cycle between 3300-360° (step G) is applied to backfilling adsorber **1** from adsorber **3**.

[**0097**] The following sequence table illustrates the above sequence description.

TABLE 1

Sequence Table

		Adsorber 1			Adsorber 2			Adsorber 3		
Step	Time	1st Stator valve	2nd Stator Valve	State	1st Stator valve	2nd Stator Valve	State	1st Stator valve	2nd Stator Valve	State
1	0–30	F to H1	Closed	Feed pressurization	Closed	L2 to B	Provide buffer gas	H3 to E	Closed	Exhaust
2	30–60	F to H1	Closed	Feed pressurization	Closed	L2 to L3	Provide purge	H3 to E	L2 to L3	Purge
3	60–90	F to H1	L1 to P	Production	H2 to E	Closed	Exhaust	Closed	B to L3	Pressurization from buffer
4	90–120	F to H1	L1 to L3	Provide product pressurization	H2 to E	Closed	Exhaust	Closed	L1 to L3	Product pressurization
5	120–150	Closed	L1 to B	Provide buffer gas	H2 to E	Closed	Exhaust	F to H3	Closed	Feed pressurization
6	150–180	Closed	L1 to L2	Provide purge	H2 to E	L1 to L2	Purge	F to H3	Closed	Feed pressurization
7	180–270	H1 to E	Closed	Exhaust	Closed	B to L2	Pressurization from buffer	F to H3	L3 to P	Production
8	210–240	H1 to E	Closed	Exhaust	Closed	L3 to L2	Product pressurization	F to H3	L3 to L2	Provide product pressurization
9	240–270	H1 to E	Closed	Exhaust	F to H2	Closed	Feed pressurization	Closed	L3 to B	Provide buffer gas
10	270–300	H1 to E	L3 to L1	Purge	F to H2	Closed	Feed pressurization	Closed	L3 to L1	Provide purge
11	300–330	Closed	B to L1	Pressurization from buffer	F to H2	L1 to P	Production	H3 to E	Closed	Exhaust
12	330–360	Closed	L2 to L1	Product pressurization	F to H2	L1 to L2	Provide product pressurization	H3 to E	Closed	Exhaust

[0098] **FIG. 6**

[0099] **FIG. 6** shows a cross section of a rotary module of an oxygen concentrator. The bottom left of the figure shows a motor **206** attached to a gear **209**, which is in turn attached to drive coupling **210**. Rotation of the assembly is about axis **211**.

[0100] The left side of the diagram shows the first stator valve face plate **22**, while the right side of the diagram shows the second stator valve face plate **24**. Rotor valve face plates are represented by **37** and **38** and are described in **FIGS. 7 and 10**. Note that the two sides of the drawing are shown at different stages of the cycle. Piping connects three laminate adsorbers **204** to buffer chamber **29**. Feed is input through feed port **201**. Exhaust is released through exhaust port **202**. Product is sent through product port **203**. Outer housing **207** contains the rotor assembly **208**. Cross sections **212, 213** and **214** are described in **FIGS. 7 through 10**.

[0101] **FIG. 7** and b (Both Figures are Taken at the Cross Section **212** of **FIG. 6**.)

[0102] **FIG. 7***a* shows the first rotor valve face **37**. Apertures **250** (H1), **251** (H2) and **252** (H3) on the face plate facilitate the flow action of gases from one adsorber to another corresponding to the sequencing defined in the FIGS. **4/5** description. H1, H2 and H3 correspond to the first rotor valve openings for adsorbers **1**,**2** and **3**, respectively.

[0103] **FIG. 7***b* shows the first stator valve face **22**. Feed enters through feed port aperture **201** and exhaust exits through exhaust port aperture **202**.

[0104] Both figures can are taken at the cross section **212** on **FIG. 6**.

[0105] **FIGS. 8***a* and **8***b*

[0106] **FIGS. 8***a* shows the rotor laminate adsorber cross section. It is a cross section located at the **213** position on **FIG. 6**. Note that it is a single spiral wound with spacers separating the layers. The three adsorber sections **1, 2** and **3** are shown separated by sealant separators **301** that are impregnated in the laminate adsorber. Buffer chamber **29** is located in the center of the rotor apparatus **208**. Arrow **302** shows the direction of rotation of the adsorber assembly.

[0107] **FIG. 8***b* shows multiple sheets of laminate with physical plugs as separators **301**.

[0108] **FIG. 9**

[0109] **FIG. 9** shows the rotor valve face cross section. It is a cross section located at the **213** position on **FIG. 6**. The dashed slots **401** correspond to the relative positions of the adsorbers in the rotor assembly. **402**, **403** and **404** represent the rotor port apertures **501**, **502** and **503** (as seen in **FIG. 10***a*) or **250**, **251** and **252** (as seen in **FIG. 7***a*), depending on which rotor face is being described.

[0110] **FIG. 10**

[0111] **FIG. 10***a* shows the second rotor valve face **38**. **FIG. 10***b* shows the second stator valve face **24**. Both figures are taken at cross section **214** on **FIG. 6**. Each of the apertures **501** (L1), **502** (L2) and **503** (L3) on the face plate facilitate the flow action of gases from one adsorber to another corresponding to the sequencing defined in the

FIGS. **4/5** description. L**1**, L**2** and L**3** correspond to the second rotor valve openings for adsorbers **1**,**2** and **3**, respectively.

[**0112**] Reference numerals **504**, **505**, and **506** indicate first, second and third light reflux exit ports, respectively, and numerals **507**, **508**, and **509** indicate first, second and third light reflux return ports, respectively. Reference numeral **29** indicates the buffer chamber.

[**0113**] **FIG. 11**

[**0114**] **FIG. 11** shows and embodiment **600** similar to **FIG. 1**, but with the adsorber housing body stationary while the first and second valve bodies rotate.

[**0115**] The adsorbers are mounted at equal angular spacings in an adsorber housing body **23**, which is engaged in relative rotation with first and second valve bodies **611** and **613** to define rotary sealing faces of first and second valve adjacent respectively the first and second ends of the adsorber flow paths. There is fluid sealing engagement between the adsorber housing body and respectively the first and second valve bodies. The adsorber housing body **23** is stationary, while the first and second valve bodies **611** and **613** rotate to achieve the valving function. Fluid transfer means are provided to provide feed gas to the first valve body **611**, to remove exhaust gas from the first valve body **611**, and to deliver product gas from the second valve body **613**.

[**0116**] In this embodiment, the first valve body has fluid seals **604** and **605** which define the feed fluid transfer chamber **601** as fluid transfer means to provide feed gas to the first valve body between the first valve body **611** and the casing **612**. Feed gases are conducted through conduit **614**.

[**0117**] The first valve body also has fluid seal **605** and **606** which define the exhaust fluid transfer chamber **602** between the first valve body **611** and the casing **612**. Chamber **602** is fluid transfer means to remove exhaust gas from the first valve body. Exhaust gases are conducted through conduit **615**.

[**0118**] The second valve body **613** has fluid seals **608** that defines the product fluid transfer chamber **610** between the second valve body **613** and the casing **612**. Chamber **610** is fluid transfer means to provide product gas from the second valve body. Product gases are conducted through conduit **616**.

[**0119**] These is a shaft for each valve body that drives rotation of the body, with shaft **603** driving first valve body **611** and shaft **609** driving second valve body **613**. An option exists for these shafts to be engaged as a single shaft to drive the valve bodies. The shafts are driven to rotate by valve drive means **607**, such as a motor.

[**0120**] Although certain preferred embodiments of the present invention have been shown and described in detail, it should be understood that various changes and modifications may be made therein without departing from the scope of the appended claims.

What is claimed is:

1. Process for pressure swing adsorption separation of a feed gas mixture containing a more readily adsorbed component and a less readily adsorbed component, with the more readily adsorbed component being preferentially adsorbed from the feed gas mixture by an adsorbent material under increase of pressure, so as to separate from the feed gas mixture a heavy product gas enriched in the more readily adsorbed component and a light product gas enriched in the less readily adsorbed component; providing for the process a cooperating set of three adsorbers within a rotor and equally spaced angularly about the axis defined by rotation of the rotor relative to a stator, and rotating the rotor so as to generate within each adsorber cyclic variations of pressure and flow at a cyclic period defined by the frequency of rotation along a flow path contacting the adsorbent material between first and second ends of the adsorber, the cyclic variations of pressure extending between a higher pressure and a lower pressure of the process; rotating the rotor so that the first ends of the adsorbers successively communicate to feed and exhaust ports provided in a first valve surface between the rotor and the stator, and the second ends of the adsorbers successively communicate to a light product port, to light reflux exit ports and to light reflux return ports provided in a second valve surface between the rotor and the stator; the process including for each of the adsorbers in turn:

(a) supplying feed gas mixture at a feed pressure through the feed port to the adsorber over a feed interval which is substantially ⅓ of the cycle period so as to pressurize the adsorber to substantially the higher pressure, and then to deliver light product gas from the light product port at substantially the higher pressure less flow frictional pressure drops,

(b) withdrawing light reflux gas enriched in the less readily adsorbed component from the light reflux exit ports, in part to depressurize the adsorber after the feed interval,

(c) withdrawing second product gas at an exhaust pressure through the exhaust port from the adsorber over an exhaust interval which is substantially ⅓ of the cycle period so as to depressurize the adsorber to substantially the lower pressure while delivering the second product gas,

(d) returning light reflux gas enriched in the less readily adsorbed component from the light reflux return ports so as to purge the adsorber in the latter part of the exhaust interval and then to partially repressurize the adsorber prior to the next feed interval,

so that feed gas is continuously supplied to substantially one adsorber at time, and exhaust gas is continuously removed from substantially one adsorber at a time.

2. The process of claim 1, with a number of steps (b) for withdrawing light reflux gas from an adsorber, and an equal number of steps (c) for returning that light reflux gas to an adsorber.

3. The process of claim 2, further comprising the step of performing pressure let-down on each light reflux gas after being withdrawn and before being returned.

4. The process of claim 2, further comprising the step of withdrawing light reflux gas from an adsorber and directly returning that light reflux gas to another adsorber whose cyclic phase is 120° apart.

5. The process of claim 2, further comprising the step of withdrawing light reflux gas from an adsorber, delivering that light reflux gas to a buffer chamber, and then later

returning that light reflux gas from the buffer chamber to another adsorber whose cyclic phase is 120° apart.

6. Process for pressure swing adsorption separation of a feed gas mixture containing a more readily adsorbed component and a less readily adsorbed component, with the more readily adsorbed component being preferentially adsorbed from the feed gas mixture by an adsorbent material under increase of pressure, so as to separate from the feed gas mixture a heavy product gas enriched in the more readily adsorbed component and a light product gas enriched in the less readily adsorbed component; providing for the process a cooperating set of three adsorbers within a rotor and equally spaced by 120° angular separation about the axis defined by rotation of the rotor relative to a stator, and rotating the rotor so as to generate within each adsorber cyclic variations of pressure and flow at a cyclic period defined by the frequency of rotation along a flow path contacting the adsorbent material between first and second ends of the adsorber, the cyclic variations of pressure extending between a higher pressure and a lower pressure of the process; rotating the rotor so that the first ends of the adsorbers successively communicate to feed and exhaust ports provided in a first valve surface between the rotor and the stator, and the second ends of the adsorbers successively communicate to a light product port, to first, second and third light reflux exit ports and to first, second and third light reflux return ports provided in a second valve surface between the rotor and the stator; the process including for each of the adsorbers in turn the following cyclical steps in sequence:

(a) supplying feed gas mixture at a feed pressure through the feed port to the adsorber over a feed interval which is substantially ⅓ of the cycle period so as to pressurize the adsorber to substantially the higher pressure, and then to deliver light product gas from the light product port at substantially the higher pressure less flow frictional pressure drops,

(b) withdrawing a first light reflux gas enriched in the less readily adsorbed component from the first light reflux exit port at about the end of the feed interval,

(c) withdrawing a second light reflux gas enriched in the less readily adsorbed component from the first light reflux exit port to depressurize that adsorber after the feed interval,

(d) withdrawing a third light reflux gas enriched in the less readily adsorbed component from the first light reflux exit port to further depressurize that adsorber,

(e) withdrawing second product gas at an exhaust pressure through the exhaust port from the adsorber over an exhaust interval which is substantially ⅓ of the cycle period so as to further depressurize that adsorber to substantially the lower pressure while delivering the second product gas,

(f) returning third light reflux gas from the third light reflux return port which is receiving that gas after pressure letdown from another adsorber (whose phase is leading by 120°), so as to purge the adsorber in the latter part of the exhaust interval,

(g) returning second light reflux gas from the second light reflux return port so as to partially repressurize the adsorber prior to the next feed interval,

(h) returning first light reflux gas from the first light reflux return port which is receiving that gas after pressure letdown from another adsorber (whose phase is lagging by 120°), so as to further repressurize the adsorber prior to the next feed interval, and

(i) cyclically repeating the above steps,

so that feed gas is continuously supplied to substantially one adsorber at time, and exhaust gas is continuously removed from substantially one adsorber at a time.

7. Process for pressure swing adsorption separation of a feed gas mixture containing a more readily adsorbed component and a less readily adsorbed component, with the more readily adsorbed component being preferentially adsorbed from the feed gas mixture by an adsorbent material under increase of pressure, so as to separate from the feed gas mixture a heavy product gas enriched in the more readily adsorbed component and a light product gas enriched in the less readily adsorbed component; providing for the process a cooperating set of three adsorbers, and generating within each adsorber cyclic variations of pressure and flow at a cyclic period defined by the frequency of rotation along a flow path contacting the adsorbent material between first and second ends of the adsorber and with the cyclic phase 120° staggered for each adsorber, the cyclic variations of pressure extending between a higher pressure and a lower pressure of the process; the process including for each of the adsorbers in turn the following cyclical steps in sequence:

(a) supplying feed gas mixture to the first end of the adsorber over a feed interval which is substantially ⅓ of the cycle period so as to pressurize the adsorber to substantially the higher pressure, and then to deliver light product gas from the second end of the adsorber at substantially the higher pressure less flow frictional pressure drops,

(b) withdrawing a first light reflux gas enriched in the less readily adsorbed component from the second end of the adsorber at about the end of the feed interval,

(c) withdrawing a second light reflux gas enriched in the less readily adsorbed component from the second end of the adsorber to depressurize that adsorber after the feed interval, and delivering the second light reflux gas to a buffer chamber,

(d) withdrawing a third light reflux gas enriched in the less readily adsorbed component from the second end of the adsorber to further depressurize that adsorber,

(e) withdrawing second product gas at an exhaust pressure from the first end of the adsorber over an exhaust interval which is substantially ⅓ of the cycle period so as to further depressurize that adsorber to substantially the lower pressure while delivering the second product gas,

(f) supplying third light reflux gas from another adsorber (whose phase is leading by 120°) to the second end of the adsorber, so as to purge the adsorber during the latter part of the exhaust interval,

(g) supplying second light reflux gas from the buffer chamber to the second end of the adsorber, so as to partially repressurize the adsorber prior to the next feed interval,

(h) supplying third light reflux gas from another adsorber (whose phase is leading by 120°) to the second end of the adsorber, so as to further repressurize the adsorber prior to the next feed interval, and

(i) cyclically repeating the above steps,

while feed gas is continuously supplied to substantially one adsorber at time, and exhaust gas is continuously removed from substantially one adsorber at a time.

8. Apparatus for pressure swing adsorption separation of a gas mixture containing a more readily adsorbed component and a less readily adsorbed component, with the more readily adsorbed component being preferentially adsorbed from the gas mixture by an adsorbent material under increase of pressure between a lower pressure and a higher pressure, so as to separate from the gas mixture a heavy product gas enriched in the more readily adsorbed component and a light product gas depleted in the more readily adsorbed component; the apparatus including an adsorber rotor cooperating with a stator mutually defining the rotational axis of the rotor and with rotor drive means to rotate the rotor at a rotational period which defines a pressure swing adsorption cycle period, the rotor containing a cooperating set of three adsorbers equally angularly spaced about the rotational axis, each adsorber having a flow path contacting the adsorbent material between first and second ends of the adsorber, the first ends of the adsorbers communicating by first apertures to a first valve surface between the rotor and the stator, and the second ends of the adsorbers communicating by second apertures to a second valve surface between the rotor and the stator; the first valve surface having feed and exhaust ports engaging successively in fluid communication with the first apertures, and the first valve surface having a light product port, and first, second and third light reflux exit ports and first second and third light reflux return ports engaging successively in fluid communication with the second apertures; the apparatus further including feed supply means communicating to the feed port and second product exhaust means communicating to the exhaust port; the first and third light reflux exit ports communicating to directly to the first and third light reflux return ports respectively, and the second light reflux exit port communicating to a buffer chamber communicating in turn to the second light reflux return port; and the angular positions and widths of the ports and apertures being configured so that for each adsorber in sequence the following steps are performed:

(a) the first aperture of the adsorber is opened to the feed port through which feed gas mixture is supplied by the feed supply means over a feed interval of substantially ⅓ of the cycle period so as to pressurize the adsorber to substantially the higher pressure, while the second aperture of the adsorber is then opened to the light product port in the feed interval so as to deliver light product gas at substantially the higher pressure less flow frictional pressure drops,

(b) the second aperture of the adsorber is opened sequentially to the first, second and third light reflux exit ports so as to deliver light reflux gas enriched in the less readily adsorbed component and to depressurize the adsorber after the feed interval,

(c) the first aperture of the adsorber is opened to the exhaust port through which second product gas is exhausted by the second product exhaust means at an exhaust pressure over an exhaust interval which is substantially ⅓ of the cycle period so as to depressurize that adsorber to substantially the lower pressure and to deliver the second product gas,

(d) the second aperture of the adsorber is opened sequentially to the third, second and first light reflux return ports so as to purge the adsorber in the latter part of the exhaust interval and then to partially repressurize the adsorber prior to the next feed interval.

9. The apparatus of claim 8, further including sealing means in the first and second valve surfaces of the stator so as to limit gas leakage from and between the ports in those valve faces.

10. The apparatus of claim 8, in which the adsorber rotor includes a central core which is cylindrical and concentric with the axis.

11. The apparatus of claim 10, in which the central core is hollow and contains the buffer chamber which communicates to the second light reflux exit and return ports.

12. The apparatus of claim 8, in which the adsorbers are provided from layered adsorbent sheets, the sheets being formed of adsorbent material and a reinforcement material, with spacers between the sheets to establish flow channels between adjacent pairs of sheets.

13. The apparatus of claim 12, the adsorbers being installed as angularly spaced adsorber packs within the rotor and between the first and second valve faces, with the adsorbent sheets as sheets layered with flow channels therebetween to form the pack, and with the width of the sheets being not more than about ⅓ of the circumference of the central core.

14. The apparatus of claim 13, in which the adsorber rotor includes a central core which is cylindrical and concentric with the axis, and with the three adsorber packs positioned at equal angular intervals around the central core of the rotor, and with sealing partitions between the packs.

15. The apparatus of claim 8, in which the adsorber rotor includes a central core which is cylindrical and concentric with the axis, an adsorbent sheet formed of adsorbent material and a reinforcement material is rolled with spacers in a spiral roll about the central core so that the spacers define flow channels between adjacent layers of the roll, and lateral sealing means are provided at 120° angular intervals in the spiral roll so as to define the three adsorbers within the spiral roll.

16. The apparatus of claim 15, in which the lateral sealing means are provided by impregnating the spiral rolls with an inert sealant at 120° angular intervals.

17. The apparatus of claim 8, with means for light reflux pressure let-down of gas withdrawn from a light reflux exit port before return that gas to a light reflux return port.

18. The apparatus of claim 17, in which the means for light reflux pressure let-down is an orifice.

19. The apparatus of claim 8, in which the feed supply means is a compressor.

20. The apparatus of claim 19, in which the compressor supplies feed gas at a pressure which varies in accordance with pressurization of each adsorber during the feed interval.

21. The apparatus of claim 20, in which the compressor has two compression chambers in opposed phase, the volume of the compression chambers is cyclically varied by operation of a compressor drive means at a cyclic period which is ⅔ of the rotational period of the adsorber rotor, and

the compressor drive means is synchronized with the adsorber rotor drive means so that one compression chamber supplies feed gas to an adsorber over its feed interval, and the other compression chamber supplies feed gas to the next adsorber over its feed interval.

22. The apparatus of claim 20, in which the compressor drive means and the adsorber rotor drive means are operated by a single motor.

23. The apparatus of claim 8, in which the exhaust means includes an orifice cooperating with the exhaust port so as to achieve pressure letdown to approximately the lower pressure of second product gas from a depressurizing adsorber during the early part of the exhaust interval for that adsorber.

24. The apparatus of claim 8, in which the exhaust means is a vacuum pump.

25. The apparatus of claim 24, in which the vacuum pump has two pump chambers in opposed phase, the volume of the pump chambers is cyclically varied by operation of a vacuum pump drive means at a cyclic period which is ⅔ of the rotational period of the adsorber rotor, and the vacuum pump drive means is synchronized with the adsorber rotor drive means so that one pump chamber exhausts second product gas from an adsorber over its exhaust interval, and the other pump chamber exhausts second product gas from the next adsorber over its exhaust interval

26. The apparatus of claim 25, in which the vacuum pump drive means and the adsorber rotor drive means are operated by a single motor.

27. The apparatus of claim 21 and **25**, in which the compressor drive means, the vacuum pump drive means and the adsorber rotor drive means are operated by a single motor.

28. The apparatus of claim 27, in which the motor is operated at variable speed to adjust the light product flow and purity according to demand.

29. The apparatus of claim 21 and **25**, in which the compressor drive means, the vacuum pump drive means and the adsorber rotor drive means are operated by a manual or pedal crank.

30. The apparatus of claim 21 and **25**, in which the cyclic phases of the compression chambers and pump chambers are separated by 90°.

31. The apparatus of claim 27, in which the feed gas mixture is air, the adsorbent material includes a nitrogen-selective zeolite, and the light product is enriched oxygen.

32. Process for pressure swing adsorption separation of a feed gas mixture containing a more readily adsorbed component and a less readily adsorbed component, with the more readily component being preferentially adsorbed from the feed gas mixture by an adsorbent material under increase of pressure, so as to separate from the feed gas mixture a heavy product gas enriched in the more readily adsorbed component and a light product gas enriched in the less readily adsorbed component; providing for the process a co-operating set of three adsorbers within an adsorber housing body (AHB) and equally spaced angularly about the axis defined by relative rotation between the AHB and first and second valve bodies relative to a stator, and establishing relative rotation so as to generate within each adsorber cyclic variations of pressure and flow at a cyclic period defined by the frequency of rotation along a flow path contacting the adsorbent material between first and second ends of the adsorber, the cyclic variations of pressure extending between a higher pressure and a lower pressure of the process; establishing the relative rotation so that the first ends of the adsorbers successively communicate to feed and exhaust ports provided in a first valve surface between the AHB and the first valve body, and the second ends of the adsorbers successively communicate to a light product port, to light reflux exit ports and to light reflux return ports provided in a second valve surface between the AHB and the second valve body; the process including for each of the adsorbers in turn:

(e) supplying feed gas mixture at a feed pressure through the feed port to the adosrber over a feed interval which is substantially ⅓ of the cycle period so as to pressurize the adsorber to substantially the higher pressure, and then to deliver light product gas from the light product port at substantially the higher pressure less flow frictional pressure drops;

(f) withdrawing light reflux gas enriched in the less readily adsorbed component from the light reflux exit ports, in part to depressurize that adsorber after the feed interval;

(g) withdrawing second product gas at an exhaust pressure through the exhaust port from the adsorber over an exhaust interval which is substantially ⅓ of the cycle period so as to depressurize that adsorber to substantially the lower pressure while delivering the second product gas; and

(h) returning light reflux gas enriched in the less readily adsorbed component from the light reflux return ports so as to purge the adsorber in the latter part of the exhaust interval and then to partially repressurize the adsorber prior to the next feed interval, so that feed gas is continuously supplied to substantially one adsorber at time, and exhaust gas is continuously removed from substantially one adsorber at a time.

* * * * *