US 20030194941A1

(19) **United States**

(12) **Patent Application Publication**

Janning

(10) **Pub. No.: US 2003/0194941 A1**

(43) **Pub. Date: Oct. 16, 2003**

(54) **THERMALLY ACTIVATED DOLL**

(76) Inventor: **John L. Janning**, Dayton, OH (US)

Correspondence Address:
A PATENT LAWYER CORP, PC
R WILLIAM GRAHAM
22 S ST CLAIR ST
DAYTON, OH 45402 (US)

(21) Appl. No.: **10/121,385**

(22) Filed: **Apr. 12, 2002**

Publication Classification

(51) **Int. Cl.**[7] **A63H 33/00**

(52) **U.S. Cl.** **446/14**

(57) **ABSTRACT**

A thermally activated toy includes a toy body having a cheek part having an insulating material connected thereto in a manner which substantially prevents thermal migration to a surrounding head part of the body. A thermally activated material is connected to the cheek part and is characterized to be of a first color in a first temperature range and of a second color in a second temperature range and which changes color upon temperature with the temperature moving between the ranges. The toy further includes a thermally activated animation device which is operably connected to the toy.

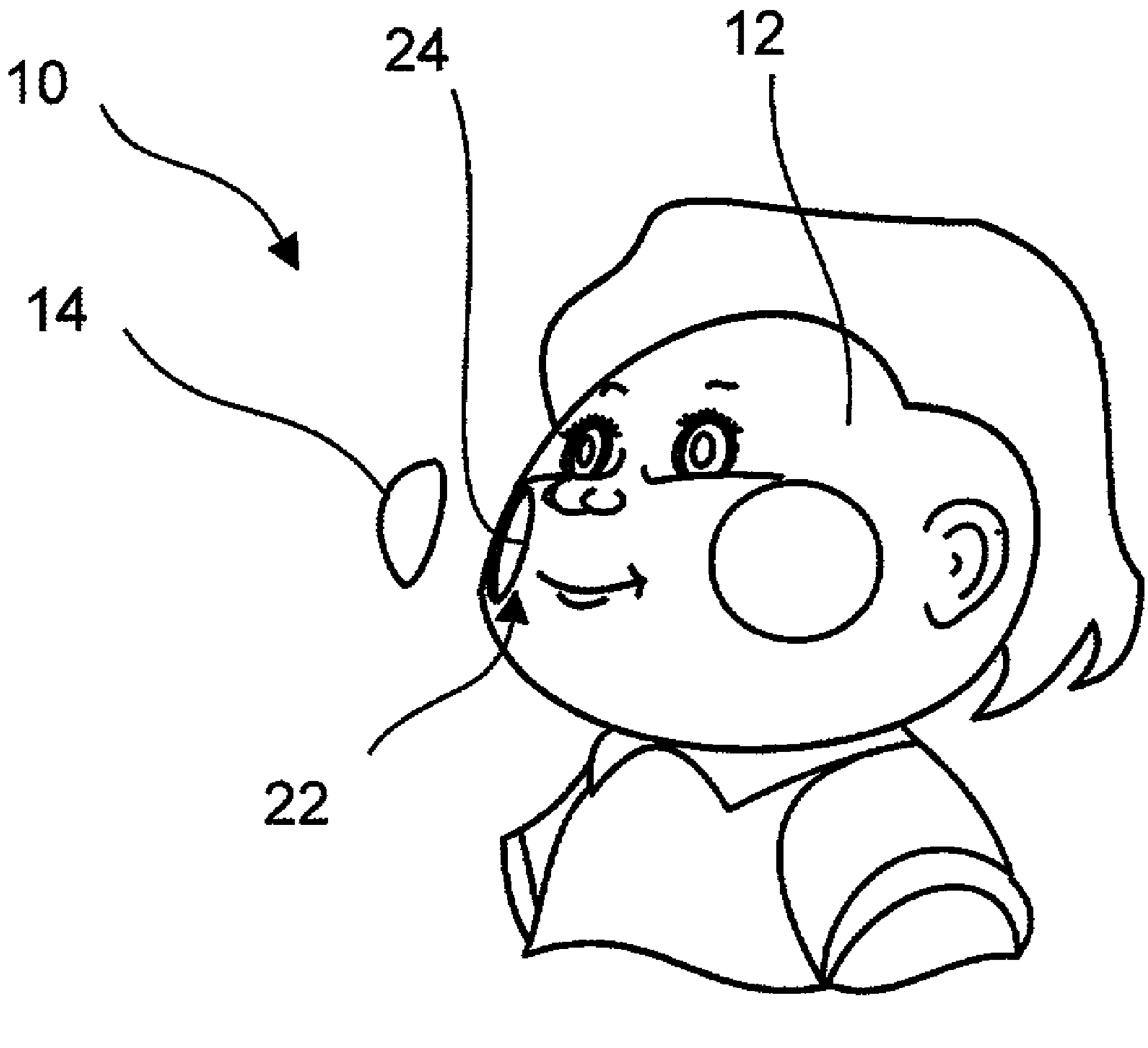

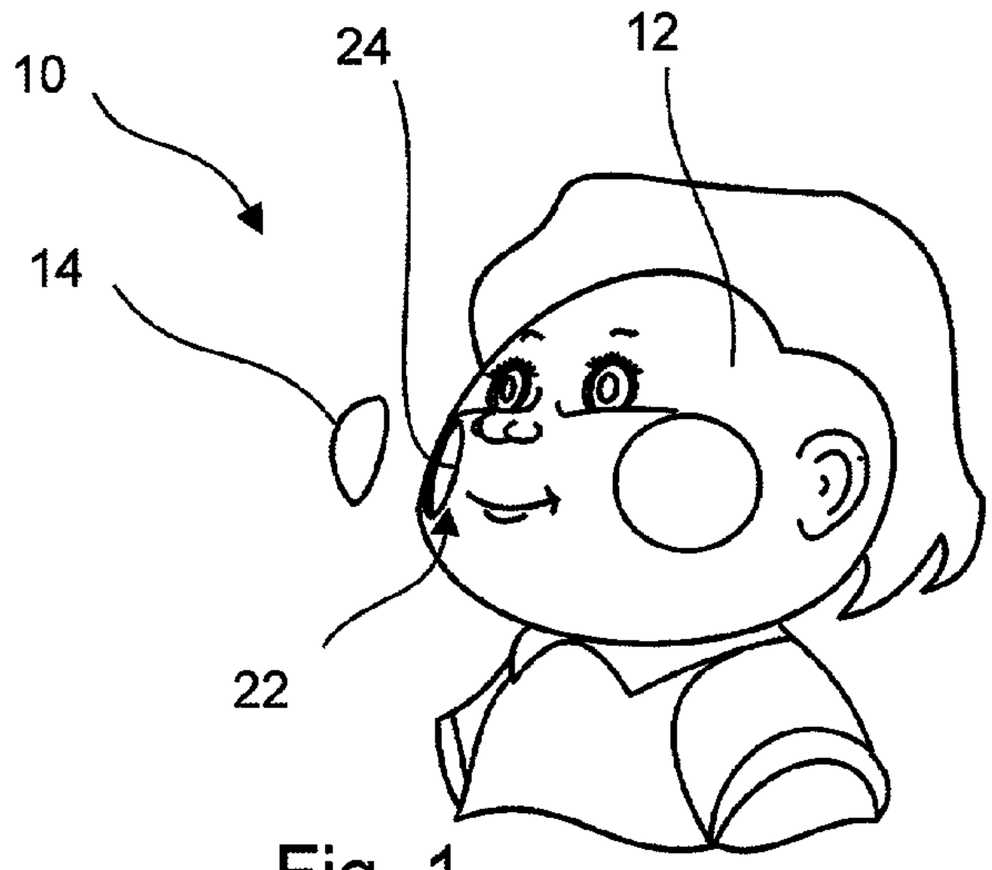

Fig. 1

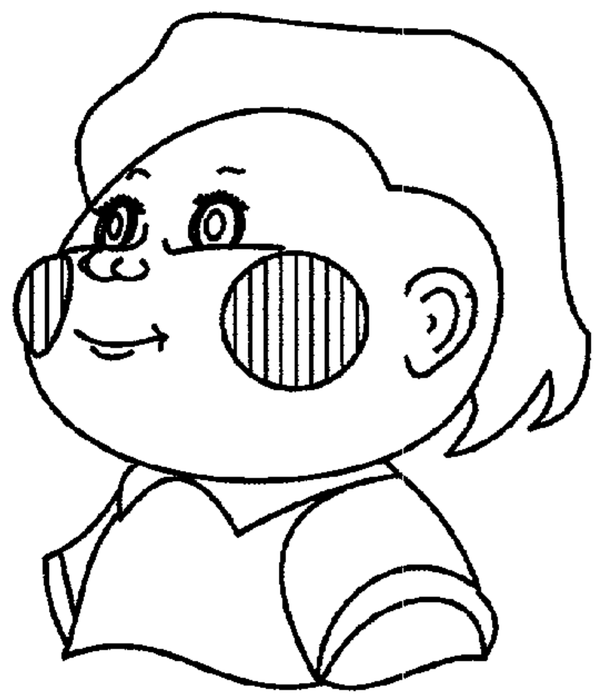

Fig. 2

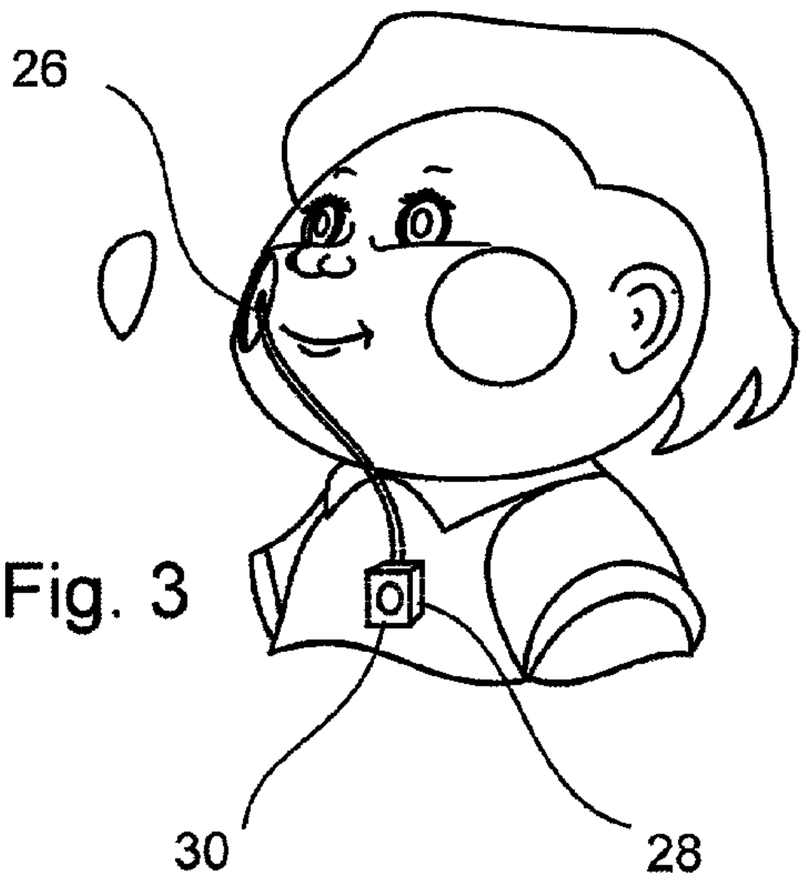

Fig. 3

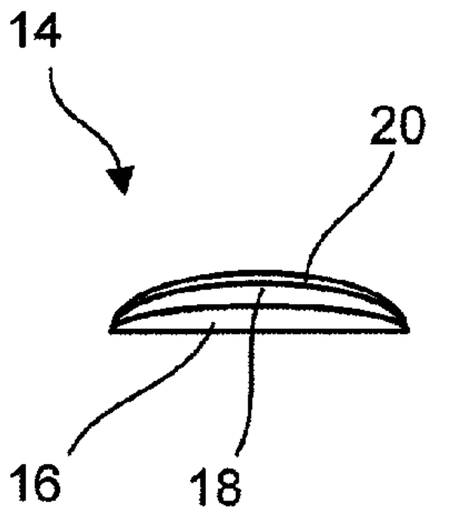

Fig. 4

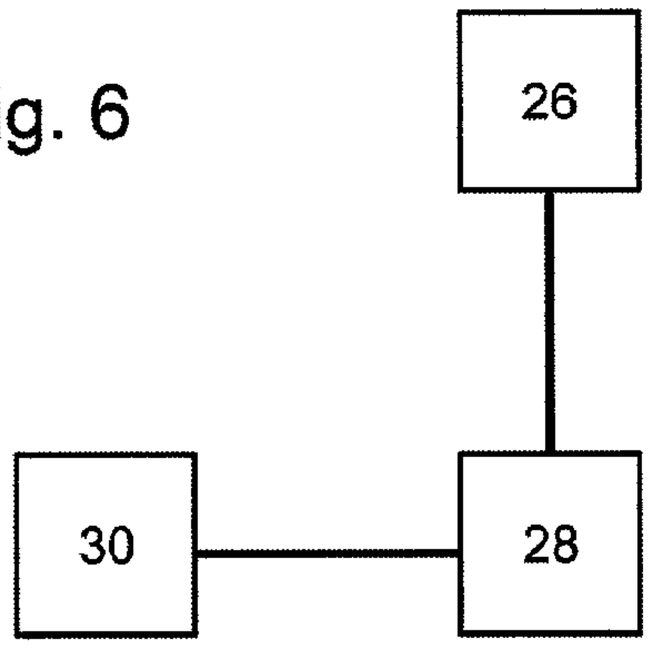

Fig. 6

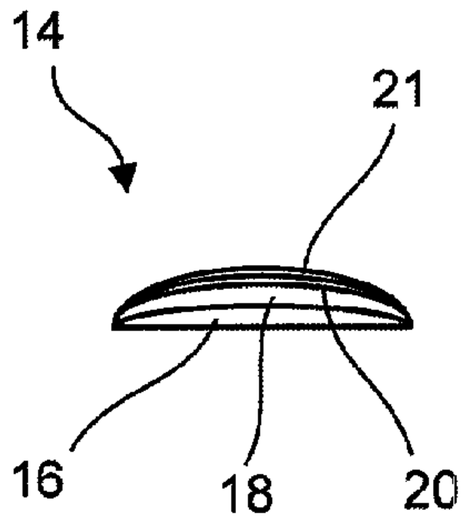

Fig. 5

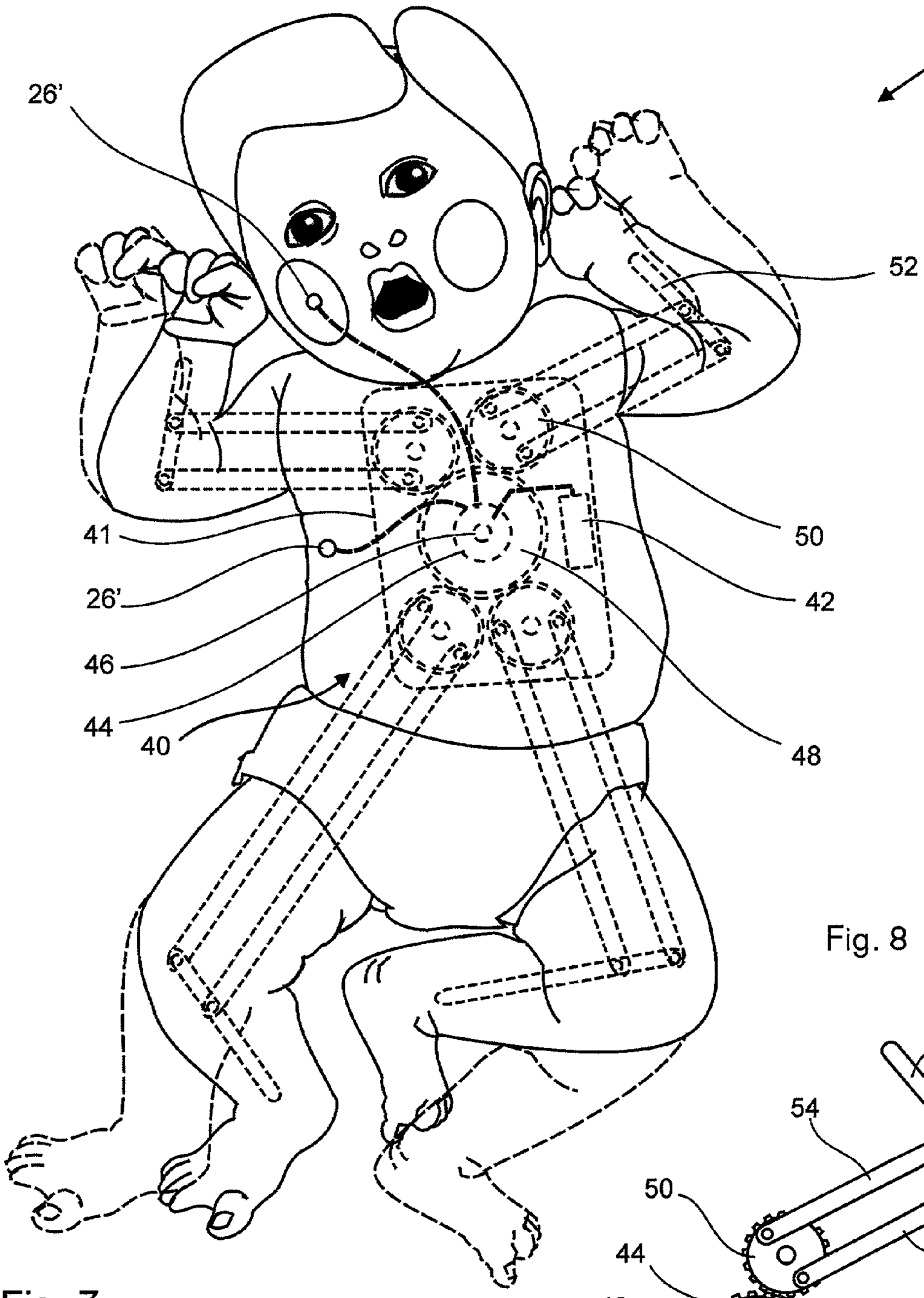

Fig. 7

Fig. 8

THERMALLY ACTIVATED DOLL

BACKGROUND OF THE INVENTION

[0001] 1. Field of the Invention

[0002] This invention relates to a thermally activated doll and in particular, to a doll having thermally activated facial color change. The doll further includes a thermally activated animated device which is disposed in the doll.

[0003] 2. Brief Description of the Prior Art

[0004] There are toys which exhibit color change in response to a temperature change. Such toys include a thermally sensitive material which changes color in response to change in temperature. Such conventional toys change their color at a predetermined temperature from one color state existing at a normal temperature range to another color state existing outside (i.e., either above or below) that temperature range.

[0005] A common problem resides in the ability to maintain a color change in the thermally sensitive material for a desired period of time. Unwanted reversal of the color change is due to thermal equilibrium occurring wherein heat is exchanged from one part to another part of the material. When the heat (or chill) which is required to obtain the other color state is discontinued at the one part and the toy cools (or warms as the case may be) due to this thermal migration, the toy returns from the other color state to the first color state which appears in ambient temperature. Attempts to solve this problem have employed chemically activated dyes which can attain another color which retain stability after the temperature of the toy has returned to normal and the heat or chill is removed, but require additional treatment to revert to their original colors. However, the present invention provides an alternative solution to prolonging color change which is achieved by thermal conductivity while also maintaining the ability of returning to the original color state upon returning to ambient temperature.

BRIEF DESCRIPTION OF THE PRESENT INVENTION

[0006] It is an object of the present invention to provide a thermally activated toy, such as a doll, capable of changing color with temperature change.

[0007] It is another object of the present invention to provide a toy, such as a doll, which includes a thermally activated animation device.

[0008] It is still another object of the present invention to provide a toy, such as a doll, which includes a thermally activated playback of a recorded message.

[0009] These objects and others are provided by the present invention which is a novel doll having material color which is thermally dependent. In one embodiment, the invention calls for a thermally activated toy, which includes a toy body having a first part thereof including an insulating material connected thereto in a manner which substantially prevents thermal migration to an adjacent second part of the body. A thermally activated material is connected to the first part and is characterized to be of a first color in a first temperature range and of a second color in a second temperature range and which changes color upon temperature the temperature moving between the ranges. The toy is a doll and the first part is preferably a cheek part and the second part is a remaining head part. The toy further includes a thermally activated animation device which operably is connected to the toy.

[0010] The material includes a thermal liquid crystal. In a preferred embodiment, a part of the doll is provided with an insulating material to deter thermal dissipation of temperature increases occurring in one part of the doll from quickly dissipating to another part of the doll and thus impedes the heat sink effect. The insulation can be interposed between one part of the doll material and the remaining plastic with thermal liquid crystal applied exterior thereto. Further, a thermocouple bridge can be operably connected to the part having the thermal liquid crystal applied thereto to enable voltage productivity upon heating which triggers an audio device which is operably connected to the bridge.

[0011] Other means such as a simply closing a switch or thermally activating a thermistor can be used to trigger an audio device. Also, a combination of a thermistor and electrical switch can be used.

BRIEF DESCRIPTION OF THE DRAWINGS

[0012] **FIG. 1** depicts a perspective view of a doll having a part of a doll's face removed to which a thermal activated color changing substance and insulating material are connected.

[0013] **FIG. 2** depicts perspective view of the doll with the part connected thereto and exhibiting a color change.

[0014] **FIG. 3** depicts another embodiment of the invention having another thermally activated animation component associated with a part of the doll.

[0015] **FIG. 4** depicts a cross-sectional of one part of the present invention.

[0016] **FIG. 5** depicts a cross-sectional of another part of the present invention.

[0017] **FIG. 6** depicts a block diagram of a part of the present invention.

[0018] **FIG. 7** depicts another embodiment of the present invention.

[0019] **FIG. 8** depicts an actuation device for use in the invention.

DETAILED DESCRIPTION OF THE PRESENT INVENTION

[0020] The present invention is described with reference to FIGS. **1** to **8** in which a doll is specifically utilized for purposes of explanation. It will be appreciated that other desired toys can be so configured.

[0021] The present invention is thus directed to a thermally interactive doll **10**, in which the doll **10** responds to human touch, such as a child playing with it via the child's body temperature. In one embodiment of the invention, the doll **10** includes a head **12**. The head **12** can be made of a suitable plastic or rubber material and made to appear having typical skin color and can be of a like material to the remaining body the of the doll **10**.

[0022] To illustrate the invention, a cheek **14** is shown as detached from the doll's head **12**. The cheek **14** includes an insulator **16** which is preferably an insulating layer made of a polyfoam, for example. A skin-like inner layer **18** is preferably made of a thin but like material of the head **12** to provide a normally continuous skin type appearance.

[0023] A thermally activated color layer **20** is applied exterior to the skin-like layer **18**. The thermally activated color layer **20** can include thermal liquid crystal paint, for example. Optionally, a thin transparent layer **21** can be provided as in **FIG. 5** which serves as a protectant of the layer **20**.

[0024] The doll's cheek **14** can turn color, such as a rosy red, when hugged by a child due to the liquid crystal's temperature sensitivity. When such a doll's head **12** is placed against a child's face, the liquid crystal material layer **20** changes its color appearance as a function of the activation temperature of the specific liquid crystal material used and the child's facial temperature. This presents a striking effect to a child in seeing that his or her hug makes a difference in the doll's appearance. The insulating layer **18** is important here in that it deters thermal dissipation and heat sink into the remaining part **22** of the head **12** to prolong the viewed effect.

[0025] The liquid crystal material used can be a water soluble paint which contains microencapsulated nontoxic cholesteryl ester-based liquid crystals, such as those used in temperature indicators where with increasing temperature, the color changes from reddish-brown to green to blue over the materials range. This color change is reversible upon returning to ambient temperature.

[0026] The liquid crystal paints are available from Edmund Scientific or Hallcrest Products, Inc. For a doll face, the Hallcrest Product number BM/R25C5W/C17-10 works quite well. It has a temperature range from 77 to 86 degrees Fahrenheit. Therefore, the paint is suitably operable in room temperature at the low end and normal body temperature at the high end. The response with temperature works best when the liquid crystal paint is viewed with a dark background. The thickness of the liquid crystal material can be selected for color and response satisfaction.

[0027] The thermal liquid crystal paint **20** can be applied to the layer **18** of the cheek **14** by various means. The paint can be sprayed on; brushed on or silk-screened onto the layer **18**. Depending upon the porosity of the material used for the layer **18**, a coating can first be applied to make the surface of the layer **18** non-porous. For example, the use of a thin saran layer can be sprayed or painted onto porous material. By mixing Dow Chemical Co. SARAN Resin F-310 with methyl iso-butyl ketone (MIBK), a thin watery type film can be sprayed onto a porous surface to make it non-porous. Other techniques can also be used if desired.

[0028] Optionally, the liquid crystal material **20** may also be coated onto an "inside" surface of a transparent layer **21** followed by layer **18** of the cheek **14** as is shown in **FIG. 5**, which can be disposed in contact with the part **22** of the dolls' head **12**. In this manner, such a multi-layer structure prevents the child from being directly exposed to the liquid crystal material **20**. While not necessarily shown to scale, the combined thickness of the layers, **16**, **18**, **20** and **21** can be relatively thin, on the order of approximately fifteen-thousandths of an inch in thickness with the outer transparent layer **21** being in the order of approximately three-thousandths of an inch thick. Other thicknesses can be used with tradeoffs in structure sturdiness and time response of the liquid crystal material. In order to enhance the glossiness, stain resistance and water resistance etc. of the present invention, a transparent resin film of an acrylic, a water-repellent or other transparent resin may be formed on the colored surface of the doll **10**. Also, an ultraviolet-absorbing agent may be mixed in such resin to improve its resistance to fading in light.

[0029] The material in layer **18** can be plastic or rubber, either of which is found suitable for coating with the thermal liquid crystal paint **20**. The layer **18** is preferably relatively thin since material thickness affects heat sink characteristics. For example, thicker materials would require holding the doll's cheek **14** in contact with one's body, such as a face, for a longer time to effect a color change. It is also noted that the cheek **14** preferably have a profile which is of a 'rounded' nature protruding outward, as this provides enhanced strength for any given thickness as opposed to flat.

[0030] **FIG. 1** shows a face of the doll **12** with an indented area **24**. This area **24** is indented for later insertion of the cheek **14**. When the cheek **14** placed or glued in contact with the area **24**, there is a reduction in heat sink for the liquid crystal material **20**, and this in turn is likely to enhance response time.

[0031] **FIG. 2** shows the cheek **14** in the assembled position on the dolls face **12**. It is contemplated that the transparent layer **21** can be in the form of a final plastic or other thin transparent overcoat which can be applied or sprayed over the head **12** to eliminate any offensive edges that may appear around the periphery of the cheek **14**. This could also help secure the cheek **14** to the doll's head **22**. **FIG. 2** also reflects the activated dolls' cheek **14** after being hugged to elevate the temperature thereof thus portraying a different color.

[0032] The doll **10** also includes an audio featured device. Inside of the doll's head **12**, in close proximity to the cheek part **14**, can be placed a thermistor **26** to sense some of the warmth of the hug as is seen in **FIG. 3**. The thermistor **26** can be operably connected in a bridge circuit **28**, for example, wherein when all legs of the bridge circuit **28** are at approximately the same temperature, there is no appreciable voltage output. A powered audio chip **30** having a prerecorded message is operably connected to the bridge circuit **28**. The activation of this prerecorded message is made possible by the resistance change of the thermistor **26**. When the doll **10** is hugged, the resistance change, unbalances the bridge **28** with a subsequent voltage output. The voltage output from the bridge circuit triggers the 'enable' input of the audio chip **30** for the recorder to playback one or more messages. Thus, an electronic circuit is formed within the doll **10** which can be made to play a pre-recorded message of the doll **10**, such as expressing delight at being hugged.

[0033] The same message can be played back over and over each time the doll is hugged or a different one of many depending upon the chip programming. Depending upon the sensitivity of the thermistor **26** and/or the 'enable' voltage of the sound recording audio chip **30**, a delay of a few seconds might be introduced so that the doll **10** response to being hugged is delayed accordingly. While the thermistor **26** is only shown on one side of the dolls' head **12**, it should be readily apparent that thermistors can be placed on both sides of the dolls' head **12** adjacent the cheeks **14**.

[0034] Alternatively, a thermistor could be placed in other parts of the doll **10**, such as the dolls' lips. When kissed, the doll could respond with, "I like that, kiss me again", or other sayings. Such interactions would be the result of thermistor action caused by the child's body temperature in contact, or near proximity, with the doll at various locations. Multiple thermistors could be placed in the doll at various locations. For example, a thermistor could be placed in the doll's back or seat, which, when warmed could initiate a response from the doll such as, "I'm sleepy tuck me in bed", or "Sing to me, I'm sleepy", or any number of messages.

[0035] Other proximity type switching devices might be used to activate other movements or reactions in a doll similar to what is taught here, but the thermal response of the thermistor teaches a suitable means to accomplish such interaction and it provides a delay that is quite "human-like" and desirable. Optionally, two thermistors **26**' activated at the same time can be cause for the doll **10** to move in a 'stretch' or other position via an electrically operated mechanism **40**. The mechanism **40** can includes a housing **41** and a battery powered source **42** which operably connects to a motor **44**. The motor **44** includes a shaft **46** which connects to a gear **48** which in turn operably connects to a plurality of gears **50**. The gears **50** connect to ends of arm pieces **54** and **56** which have their other ends connected to a transverse arm **52**. Operation could come about when a child holds a doll **10** for a period of time such that two different thermistors **26**' would change in resistance as a result. Since this would likely only happen if the doll **10** was held for a somewhat lengthy period of time in the same position, the 'movement' of the doll **10** would appear as the doll wanting to "get more comfortable". The use of thermal means to activate "lifelike" conditions in a doll **10** appears to be new and novel. The thermistors **26**' would trigger the operation of the motor **44** to move in one direction for a predetermined rotation thus causing the extension of the arms **54** and **56** in one opposing direction where upon reaching the rotation amount the motor is equipped with a limiting factor which would cause rotation in an counter opposing direction.

[0036] The above described embodiments are set forth by way of example and are not for the purpose of limiting the present invention. It will be readily apparent to those skilled in the art that obvious modifications, derivations and variations can be made to the embodiments without departing from the scope of the invention. Accordingly, the claims appended hereto should be read in their full scope including any such modifications, derivations and variations.

What is claimed is:

1. A thermally activated toy, which comprises:

a toy body having a first part thereof including an insulating material connected thereto in a manner which substantially prevents thermal migration to an adjacent second part of said body; and

a thermally activated material connected to the first part is characterized to be of a first color in a first temperature range and of a second color in a second temperature range and which changes color upon temperature with the temperature moving between said ranges.

2. The thermally activated toy of claim 1, wherein said toy is a doll.

3. The thermally activated toy of claim 2, wherein said first part is a cheek part and said second part is a remaining head part.

4. The thermally activated toy of claim 1, wherein said thermally activated material includes a thermal crystal paint.

5. The thermally activated toy of claim 4, wherein said thermal crystal paint is coated on an exterior surface of said first part.

6. The thermally activated toy of claim 5, wherein said thermally activated material is applied on an exterior surface of said first part.

7. The thermally activated toy of claim 6, which further includes a transparent material applied externally to said thermally activated material.

8. The thermally activated toy of claim 7, wherein said transparent material is a relatively thin layer coating.

9. The thermally activated toy of claim 1, which further includes a thermally activated animation device operably connected to said toy.

10. The thermally activated toy of claim 9, wherein said toy is a doll.

11. The thermally activated toy of claim 9, wherein said animation device includes a thermally activated sensor operably connected to an audio chip having a prerecorded sound to cause activation of said audio chip upon activation of said sensor.

12. The thermally activated toy of claim 11, wherein said prerecorded sound includes a message.

13. The thermally activated toy of claim 10, wherein said thermally activated animation device includes a temperature sensor adjacent said first part of said body and means operably connected to said temperature sensor for activating said animation device upon reaching a predetermined temperature.

14. The thermally activated toy of claim 10, which includes a plurality of said thermally activated devices, wherein each said thermally activated device is characterized to be capable of a carrying out a unique animation.

15. The thermally activated toy of claim 14, wherein said animation device includes means disposed within said doll for causing a stretch-like movement of said doll.

16. The thermally activated toy of claim 12, wherein said thermally activated device is operably associated with said thermally activated material such that said color change is concurrent with activation of said audio chip to play said message.

17. A thermally activated toy, which comprises:

a toy body having a thermally activated animation device operably connected to said toy, said thermal animation device includes a thermally activated sensor operably connected to an audio chip having a prerecorded sound to cause activation of said audio chip upon activation of said sensor.

18. The thermally activated toy of claim 17, wherein said prerecorded sound includes a message.

19. A thermally activated toy, which comprises:

a toy body having a thermally activated animation device operably connected to said toy, said thermal animation device includes a temperature sensor adjacent a part of said body and means operably connected to said temperature sensor for activating said animation device upon reaching a predetermined temperature.

20. The thermally activated toy of claim 19, said animation device includes means disposed within said doll for causing a stretch-like movement of said doll.

* * * * *