US 20030193353A1

(19) **United States**

(12) **Patent Application Publication**

(10) **Pub. No.: US 2003/0193353 A1**

(43) **Pub. Date: Oct. 16, 2003**

Price,, JR.

(54) **SYSTEM AND METHOD FOR DETECTING A NEGATIVE SUPPLY FAULT**

(76) Inventor: **John J. Price, JR.**, Edina, MN (US)

Correspondence Address:
TEXAS INSTRUMENTS INCORPORATED
P O BOX 655474, M/S 3999
DALLAS, TX 75265

(21) Appl. No.: **10/123,645**

(22) Filed: **Apr. 16, 2002**

Publication Classification

(51) **Int. Cl.**[7] **H03K 5/153**

(52) **U.S. Cl.** **327/78**

(57) **ABSTRACT**

A negative supply, low-voltage supply fault detection circuit is implemented without the need for a current mirror thereby providing for the elimination of inaccuracies generally associated with a current mirror, and resulting in less power consumption when compared with known negative supply, low-voltage detection circuits that employ a current mirror and associated support circuitry.

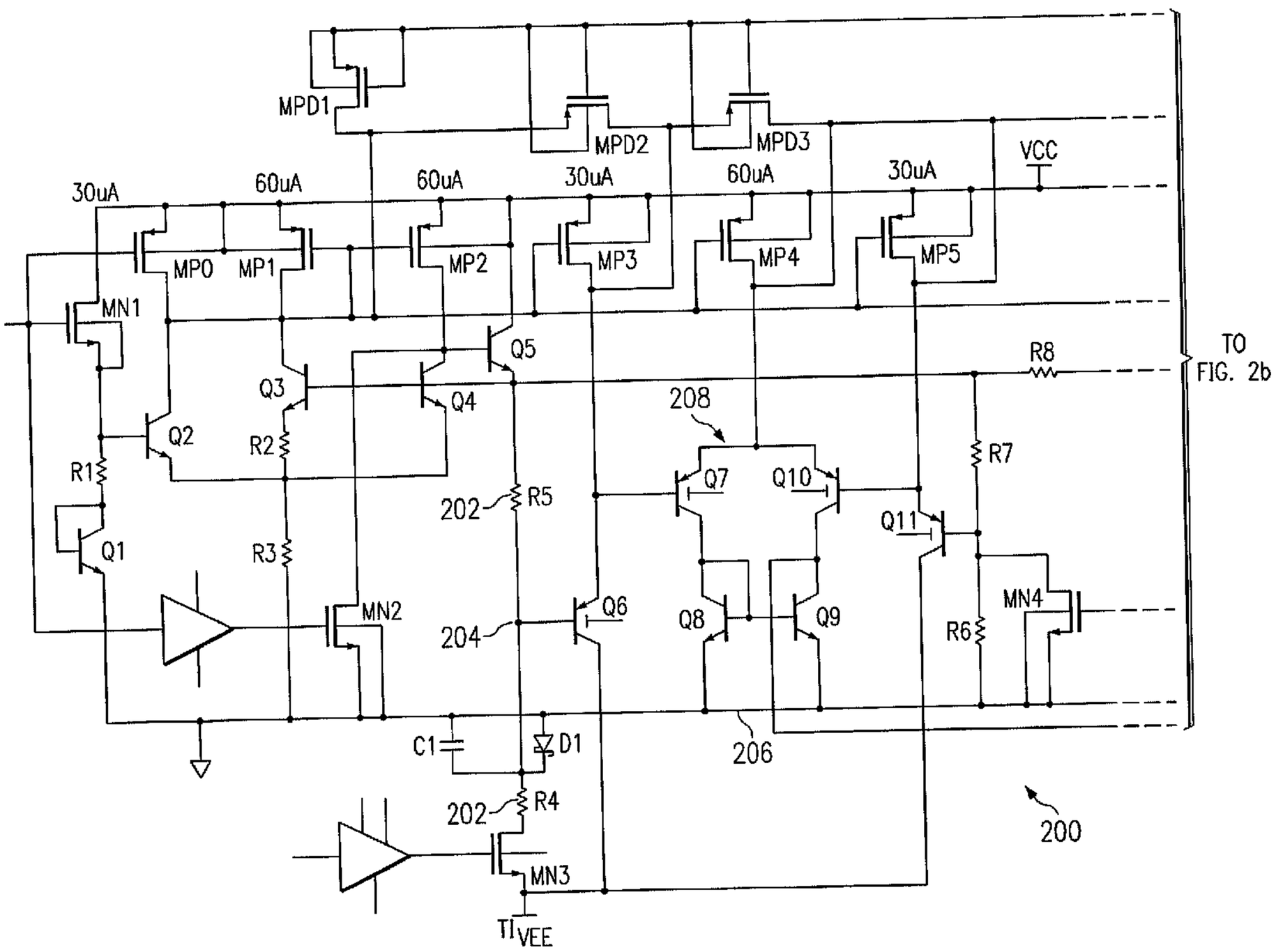

FIG. 1
(PRIOR ART)

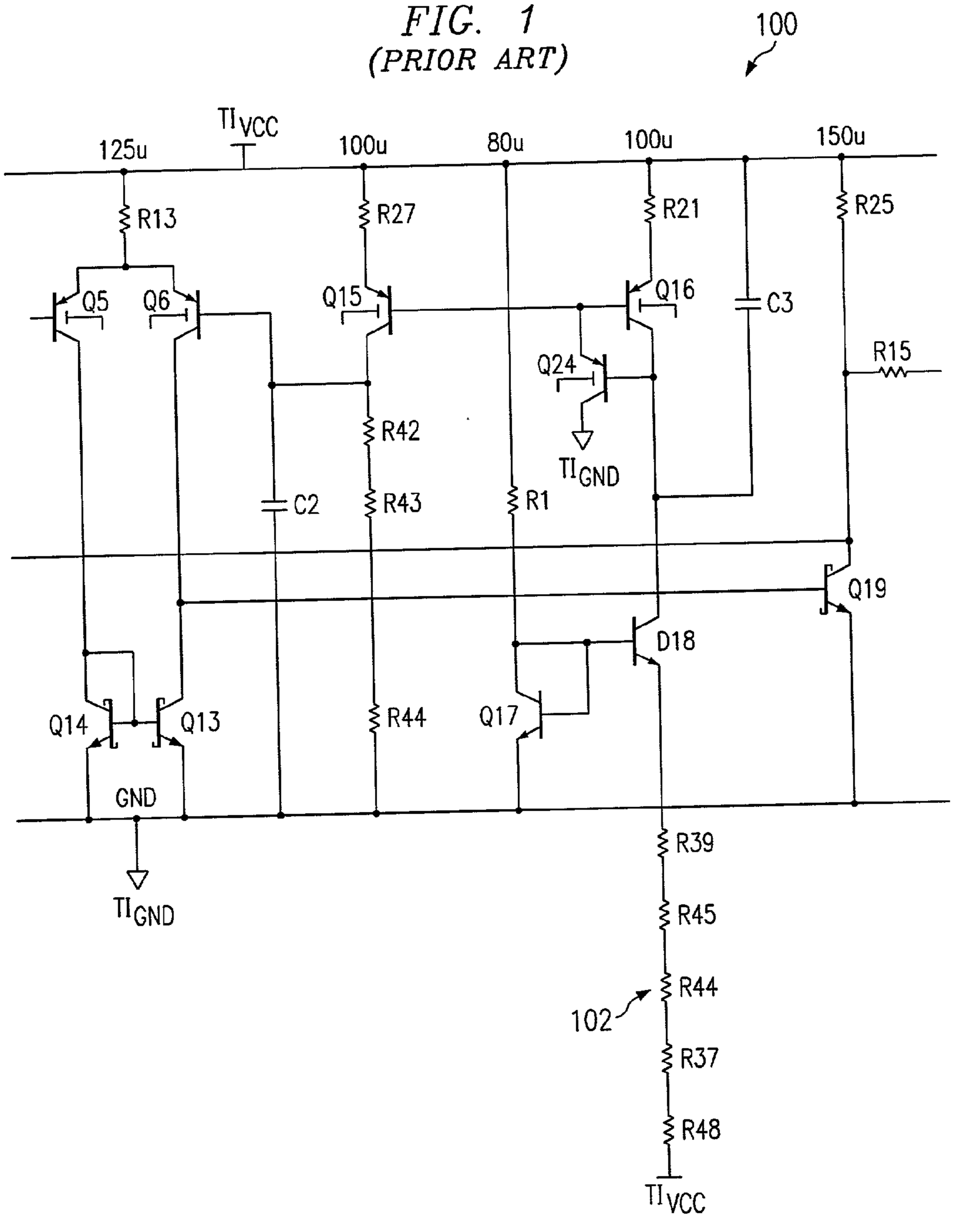

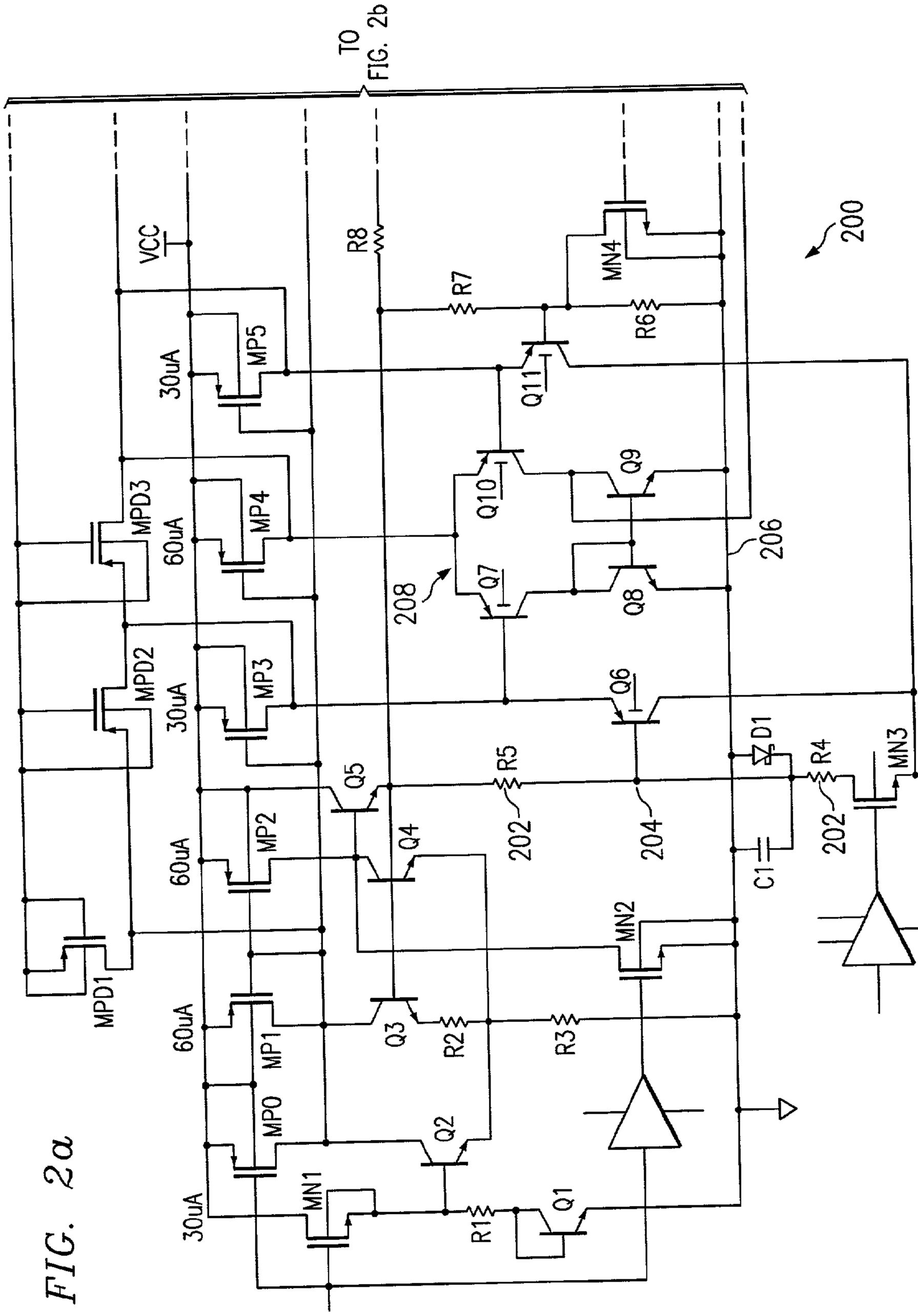
TO FIG. 2b
VCC
R8
R7
R6
MN4
200
30uA
MP5
Q11
MPD3
60uA
MP4
Q10
Q9
206
208
Q7
Q8
MPD2
30uA
MP3
Q6
Q5
R5
D1
R4
MN3
202
204
C1
202
VEE
MP2
Q4
MN2
MPD1
60uA
MP1
Q3
R2
R3
MP0
Q2
30uA
MN1
R1
Q1

FIG. 2a

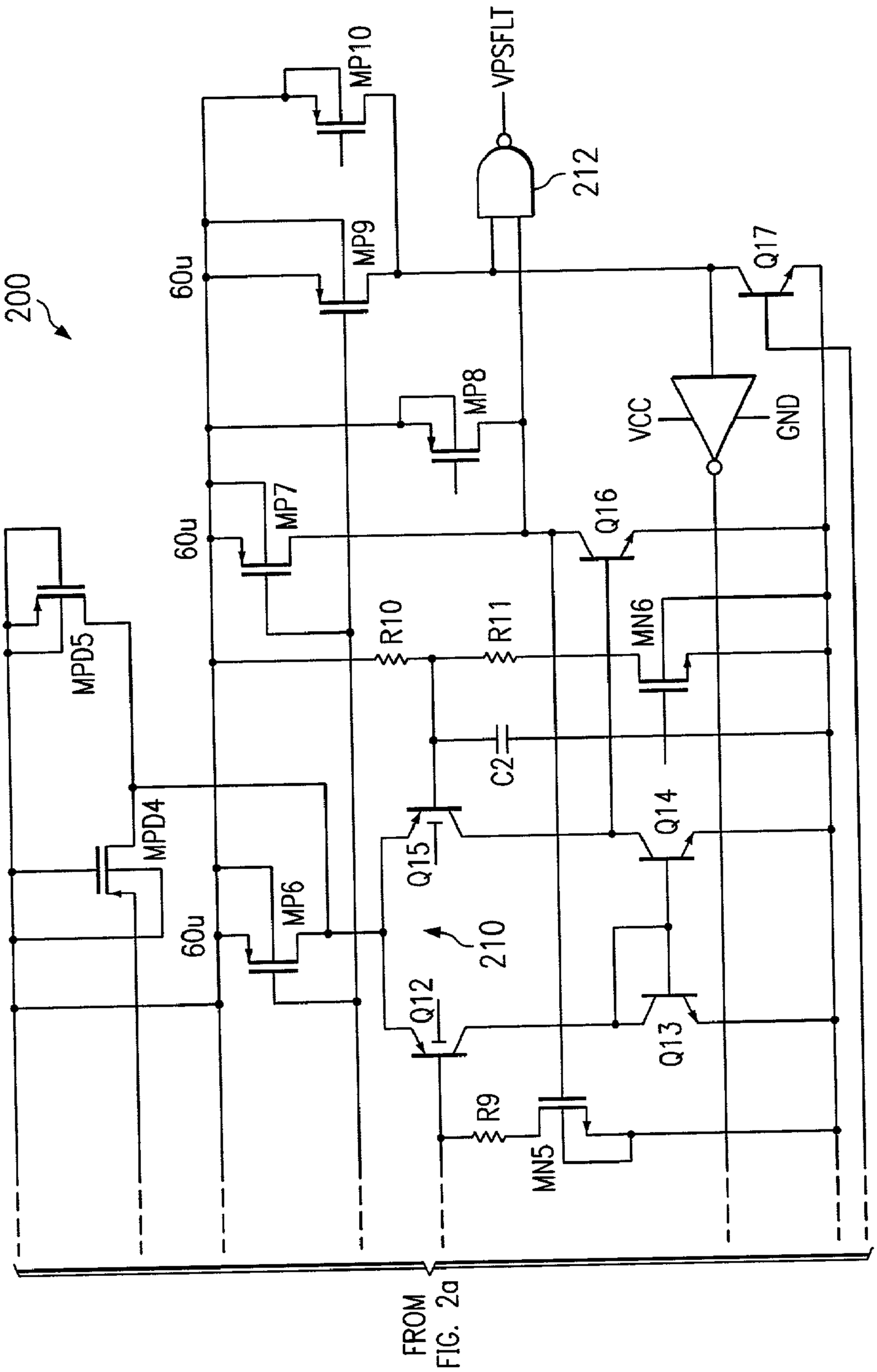
200
MP10
VPSFLT
212
60u
MP9
MP8
MP7
60u
VCC
GND
Q17
Q16
R10
R11
MN6
MPD5
C2
MPD4
Q15
Q14
60u
MP6
210
Q12
Q13
R9
MN5
FROM FIG. 2a

FIG. 2b

SYSTEM AND METHOD FOR DETECTING A NEGATIVE SUPPLY FAULT

BACKGROUND OF THE INVENTION

[0001] 1. Field of the Invention

[0002] This invention relates generally to negative supply, low-voltage detection circuits, and more particularly, to a system and method for detecting a negative supply, low-voltage supply fault without the need for a current mirror.

[0003] 2. Description of the Prior Art

[0004] Modern negative supply (V_{EE}), low-voltage detection circuits such as the detection circuit **100** illustrated in **FIG. 1**, generally employ a current mirror (depicted as Q**15**, Q**16** and Q**24**) that takes the current in a resistor string **102** to V_{EE}, and then supplies this current to a plurality of detection resistors such as resistors R**42**-R**44** illustrated in **FIG. 1** as if coming from a positive supply. With continued reference to **FIG. 1**, the voltage generated via the detection resistors R**42**-R**44** is then compared to a reference voltage such as that applied at the base of transistor Q**8**. This process requires generating a pseudo ground reference using transistors such as Q**17** and Q**18** along with a bipolar PNP or a PMOS transistor current mirror such as Q**15**, Q**16** and Q**24**, all of which occupy area, consume power, and introduce unwanted errors. Those skilled in the art will readily appreciate that PMOS and PNP mirrors are notorious for their inaccuracies if sophisticated techniques are not employed to reduce the unwanted errors. The negative supply, low-voltage detection circuit **100** utilizes an additional 80 μA of current to bias on transistor Q**17**; and the current from the V_{EE} resistor string **102** sets up a nominal 100 μA of current which spans the full supply from V_{EE} to V_{CC} (typically −5V to +5V), and is mirrored again back to Ground.

[0005] In view of the foregoing, it would be desirable and advantageous to provide a technique capable of detecting a negative supply, low-voltage supply fault and that does not require a current mirror.

SUMMARY OF THE INVENTION

[0006] The present invention is directed to a system and method for detecting a negative supply, low-voltage supply fault without the need for a current mirror.

[0007] In one aspect of the invention, a negative supply, low-voltage detection circuit is implemented to detect a negative supply, low-voltage supply fault without the inaccuracies generally associated with a current mirror.

[0008] In another aspect of the invention, a negative supply, low-voltage detection circuit is implemented to consume less power than known negative supply, low-voltage detection circuits that employ a current mirror.

[0009] In yet another aspect of the invention, a negative supply, low-voltage detection circuit is implemented without a current mirror and its associated support circuitry.

[0010] One embodiment of the invention is directed to a circuit for detecting a negative supply, low-voltage fault comprising a negative supply voltage, a circuit Ground, a circuit configured to generate a reference voltage, a resistor string coupling the negative supply voltage to the reference voltage and having a tap configured to provide a tap voltage that will be at a ground level voltage defined by the circuit Ground when the negative supply voltage reaches a desired threshold level, and a circuit configured to compare the tap voltage and the ground level voltage and generate an output signal when the negative supply voltage reaches the desired threshold level.

[0011] Another embodiment of the invention is directed to a circuit for detecting a negative supply, low-voltage fault comprising a negative supply voltage, a circuit Ground, means for generating a reference voltage, a resistor string coupling the negative supply voltage to the reference voltage and having a resistor tap that will be at a ground level voltage defined by the circuit Ground when the negative supply voltage reaches a desired threshold level, and means for comparing the resistor tap voltage with the ground level voltage to generate an output signal when the negative supply voltage reaches the desired threshold level.

[0012] Still another embodiment of the invention is directed to a method of detecting a negative supply fault comprising the steps of providing a negative supply, low-voltage detection circuit devoid of current mirrors and having a negative supply voltage, a circuit Ground, means for generating a reference voltage, a resistor string coupling the negative supply voltage to the reference voltage and having a resistor tap that will be at a ground level voltage defined by the circuit Ground when the negative supply voltage reaches a desired threshold level, and a comparator; comparing the resistor tap voltage with the ground level voltage; and generating an output signal when the negative supply voltage reaches the desired threshold level.

BRIEF DESCRIPTION OF THE DRAWINGS

[0013] Other aspects, features and advantages of the present invention will be readily appreciated, as the invention becomes better understood by reference to the following detailed description, when considered in connection with the accompanying drawing figure wherein:

[0014] **FIG. 1** is a schematic diagram illustrating a prior art negative supply, low-voltage detection circuit; and

[0015] **FIGS. 2***a* and **2***b* depict a schematic diagram illustrating a negative supply, low-voltage detection circuit according to one embodiment of the present invention.

[0016] While the above-identified drawing figure sets forth particular embodiments, other embodiments of the present invention are also contemplated, as noted in the discussion. In all cases, this disclosure presents illustrated embodiments of the present invention by way of representation and not limitation. Numerous other modifications and embodiments can be devised by those skilled in the art which fall within the scope and spirit of the principles of this invention.

DETAILED DESCRIPTION OF THE PREFERRED EMBODIMENTS

[0017] The brief background discussed herein before regarding negative supply, low-voltage detection circuits is again first set forth below to better clarify and facilitate an understanding of the particular embodiments of the present invention. As stated herein before, modern negative supply (V_{EE}), low-voltage detection circuits such as the detection circuit **100** illustrated in **FIG. 1**, generally employ a current

mirror (depicted as Q**15**, Q**16** and Q**24**) that takes the current in a resistor string **102** to V_{EE}, and then supplies this current to a plurality of detection resistors such as resistors R**42**-R**44** illustrated in **FIG. 1** as if coming from a positive supply. With continued reference to **FIG. 1**, the voltage generated via the detection resistors R**42**-R**44** is then compared to a reference voltage such as that applied at the base of transistor Q**8**. This process requires generating a pseudo ground reference using transistors such as Q**17** and Q**18** along with a bipolar PNP or a PMOS transistor current mirror such as Q**15**, Q**16** and Q**24**, all of which occupy area, consume power, and introduce unwanted errors. Those skilled in the art will readily appreciate that PMOS and PNP mirrors are notorious for their inaccuracies if sophisticated techniques are not employed to reduce the unwanted errors. The negative supply, low-voltage detection circuit **100** utilizes an additional **8011**A of current to bias on transistor Q**17**; and the current from the V_{EE} resistor string **102** sets up a nominal 100 μA of current which spans the full supply from V_{EE} to V_{CC} (typically −5V to +5V), and is mirrored again back to Ground.

[**0018**] Looking now at **FIGS. 2***a* and **2***b*, a schematic diagram illustrates a negative supply, low-voltage fault detection circuit **200** according to one embodiment of the present invention. In contradistinction with the negative supply, low-voltage detection circuit shown in **FIG. 1**, detection circuit **200** can be seen to connect the resistor string **202** from V_{EE} not to a pseudo ground, but instead to a reference voltage (typically about 1.2V) at the emitter of transistor Q**5**. The resistor string **202** has a tap **204** that will be at Ground **206** when the negative supply voltage V_{EE} is at the detection threshold; so the comparator **208** is ground referenced (at the base of transistor Q**11**). Resistors R**6** and R**7** and MOSFET MN**4** are used to adjust the ground threshold above Ground to provide hysteresis. It can be seen therefore, no additional power is dissipated when using this scheme, other than the current in the resistor string **202** connected between the negative supply V_{EE} and the reference voltage at the emitter of transistor Q**5**. The accuracy of detection circuit **200** is therefore much improved over that provided by detection circuit **100**, especially due to the absence of a PNP or PMOS current mirror.

[**0019**] Operation of the negative supply, low-voltage fault detection circuit **200** is now set forth in greater detail to provide those skilled in the low-supply detection art with the information needed to apply the novel principles and to construct and use such specialized components as are required. The 1.2V reference is generated by a simple bandgap reference at the emitter of transistor Q**5**. Everything to the left of transistor Q**5** is associated with the bandgap reference and its startup. Transistors Q**6**, Q**7** Q**10** and Q**11** provide the inputs to the V_{EE} detection comparator **208**. The PNP inputs provided by transistors Q**6** and Q**11** are necessary to allow a comparison around Ground level. The output of the comparator **208** is at the collector of transistor Q**9**; and is high for V_{EE} vault as indicated in **FIG. 2***a*, which means if V_{EE} is higher than about −2.1V (such as 2.0V), this output will be high. The resistor string for V_{CC} includes resistors R**10** and R**11**, illustrated in **FIG. 2***b*; and the associated comparator **210** is then shown with input devices Q**12** and Q**15**. MOSFET devices (e.g. MN**3** and MN**6**) shown in **FIGS. 2***a* and **2***b* respectively, are use to shut down the current flow in this cell when in "sleep mode". These devices can be viewed simply as shorts during normal operation. The two comparator **208**, **210** outputs are inverted using transistors Q**7** and Q**16** respectively. These inverted outputs are then combined in an OR function **212** to the output, VPS-FLT. The individual fault signals feed back to resistor dividers at the reference side of the comparators **208**, **210** to create hysteresis.

[**0020**] If V_{EE} is running normally, at −3V for example (or −5V for a part that uses V_{EE}=5V), and the supply collapses to −2V, the V_{EE} comparator **208** switches, taking the VPS-FLT output high, and the threshold shifts to −2.3V when the supply reaches about −2.1V (the nominal detection threshold). In this way, the comparator **208** does not chatter if the negative supply voltage is sitting at the threshold. When V_{EE} expands back toward its nominal value, the comparator **208** will switch again when it reaches −2.3V, output VPSFLT returns low, and the hysteresis returns the V_{EE} detection threshold to −2.1V. A similar analysis follows for the positive supply V_{CC}. Capacitors C**1** and C**2** at the tap points of the resistor dividers serve to low-pass filter the associated supply noise to prevent faults when the supply may have a quick excursion beyond the threshold. The present inventor has found the addition of capacitors C**1** and C**2** to be most preferable, since the supplies are seriously impacted when a writer is operating.

[**0021**] In summary explanation, a negative supply, low-voltage supply fault detection circuit is implemented without the need for a current mirror thereby providing for the elimination of inaccuracies generally associated with a current mirror, and resulting in less power consumption when compared with known negative supply, low-voltage detection circuits that employ a current mirror and associated support circuitry.

[**0022**] In view of the above, it can be seen the present invention presents a significant advancement in the art of negative supply, low-voltage fault detection. In view of the foregoing descriptions, it should be apparent that the present invention also represents a significant departure from the prior art in construction and operation. However, while particular embodiments of the present invention have been described herein in detail, it is to be understood that various alterations, modifications and substitutions can be made therein without departing in any way from the spirit and scope of the present invention, as defined in the claims which follow. For example, the GND threshold has been described for detecting a supply fault. The present invention is not so limited however, and it shall be understood that any voltage below the reference voltage could be used as a threshold.

What is claimed is:

1. A circuit for detecting a negative supply, low-voltage fault comprising:

a negative supply voltage;

a circuit configured to generate a reference voltage;

a resistor string coupling the negative supply voltage to the reference voltage and having a tap configured to provide a tap voltage that will be at a desired detection threshold voltage when the negative supply voltage reaches a desired threshold level; and

a circuit configured to compare the tap voltage and the desired detection threshold voltage and generate an

output signal when the negative supply voltage reaches the desired threshold level.

2. The circuit for detecting a negative supply, low-voltage fault according to claim 1 further comprising a circuit configured to adjust the desired threshold level to provide a desired hysteresis.

3. The circuit for detecting a negative supply, low-voltage fault according to claim 1 wherein the circuit for detecting a negative supply, low-voltage fault is devoid of current mirrors.

4. The circuit for detecting a negative supply, low-voltage fault according to claim 1 wherein the desired detection threshold voltage is Ground.

5. A circuit for detecting a negative supply, low-voltage fault comprising:

a negative supply voltage;

means for generating a reference voltage;

a resistor string coupling the negative supply voltage to the reference voltage and having a resistor tap that will be at a desired detection threshold voltage when the negative supply voltage reaches a desired threshold level; and

means for comparing the resistor tap voltage with the desired detection threshold voltage to generate an output signal when the negative supply voltage reaches the desired threshold level.

6. The circuit for detecting a negative supply, low-voltage fault according to claim 5 further comprising means for adjusting the desired threshold level to provide a desired hysteresis.

7. The circuit for detecting a negative supply, low-voltage fault according to claim 5 wherein the circuit for detecting a negative supply, low-voltage fault is devoid of current mirrors.

8. The circuit for detecting a negative supply, low-voltage fault according to claim 5 wherein the desired detection threshold voltage is Ground.

9. A method of detecting a negative supply fault comprising the steps of:

providing a negative supply, low-voltage detection circuit devoid of current mirrors and having a negative supply voltage, means for generating a reference voltage, a resistor string coupling the negative supply voltage to the reference voltage and having a resistor tap that will be at a desired detection threshold voltage when the negative supply voltage reaches a desired threshold level, and a comparator;

comparing the resistor tap voltage with the desired detection threshold voltage; and

generating an output signal when the negative supply voltage reaches the desired threshold level.

10. The method according to claim 9 further comprising the steps of:

providing means for adjusting the desired threshold level; and

adjusting the desired threshold level to achieve a desired hysteresis effect.

* * * * *