US 20030192801A1

(19) **United States**

(12) **Patent Application Publication**

(10) **Pub. No.: US 2003/0192801 A1**

(43) **Pub. Date: Oct. 16, 2003**

Yamaguchi

(54) **WRAPPING FILM HOLDING DEVICE**

(76) Inventor: **Kiyoshi Yamaguchi**, Funabashi-shi (JP)

Correspondence Address:
WELSH & KATZ, LTD
120 S RIVERSIDE PLAZA
22ND FLOOR
CHICAGO, IL 60606 (US)

(21) Appl. No.: **10/411,560**

(22) Filed: **Apr. 10, 2003**

(30) **Foreign Application Priority Data**

Apr. 11, 2002 (JP) 2002-109175

Publication Classification

(51) **Int. Cl.**[7] **B65D 85/67**

(52) **U.S. Cl.** **206/395**; 206/409

(57) **ABSTRACT**

A wrapping film holding device is provided on a surface (**3***b*) of a wrapping film container (**1**) on which a pullout opening (**3***a*) is formed for pulling out a wrapping film **10** such as to face the pullout opening (**3***a*), always energizes the wrapping film (**10**) pulled out through the opening (**3***a*) toward a direction departing from the surface (**3***b*) so that space (S) is secured between the pulled out wrapping film **10** and the surface **3***b*. The space (S) separates the wrapping film (**10**) from the surface (**3***b*). The holding device comprises a plate spring (**12**) for always energizing the pulled out wrapping film (**10**) toward the direction departing from the surface (**3***b*), and adhesive provided on tongs (**12***a*, **12***b*) of the plate spring (**12**) for allowing the wrapping film (**10**) to adhere on or to electrostatically contact with the top surfaces of the tongs (**12***a*, **12***b*).

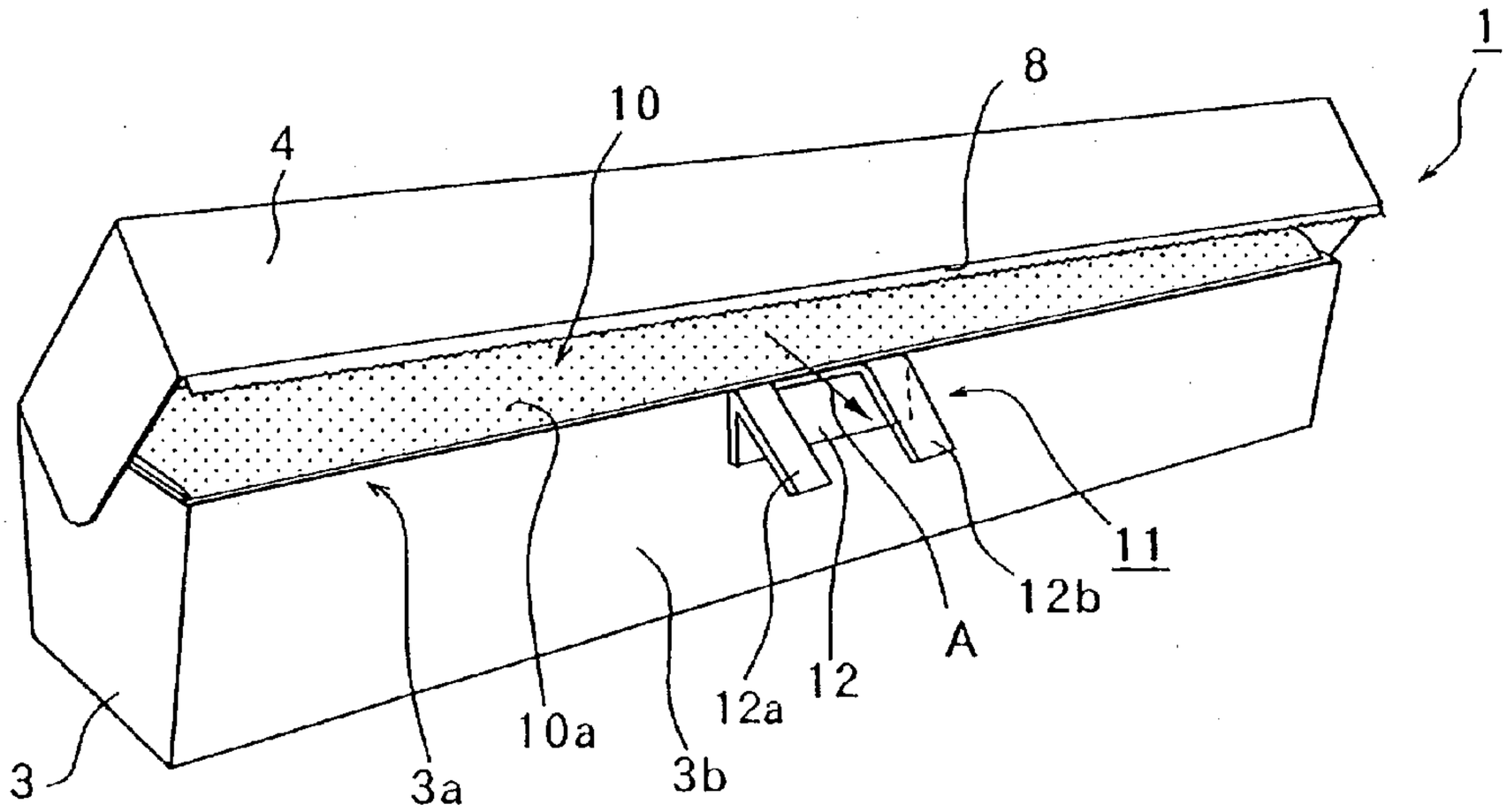

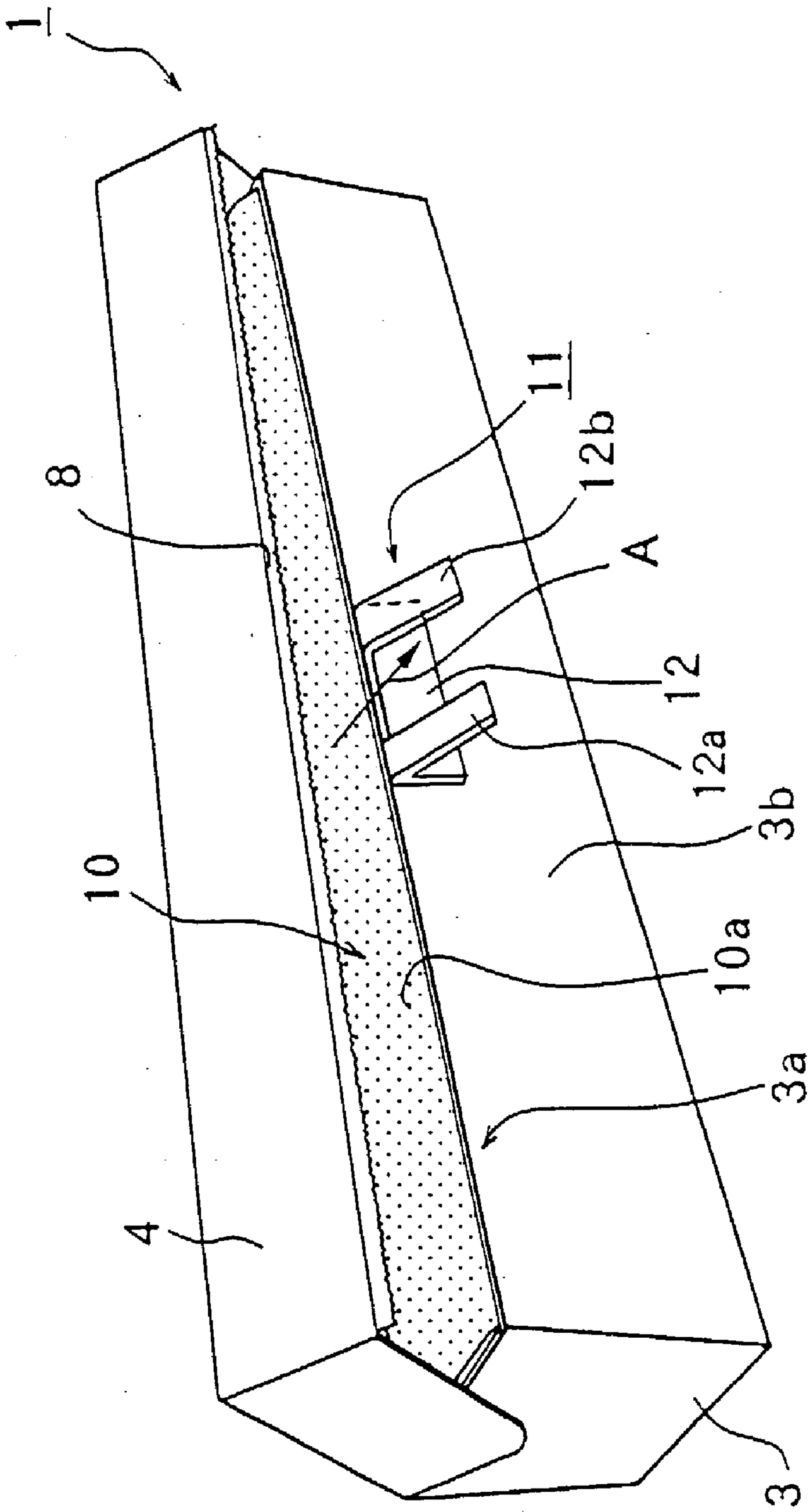

FIG. 1

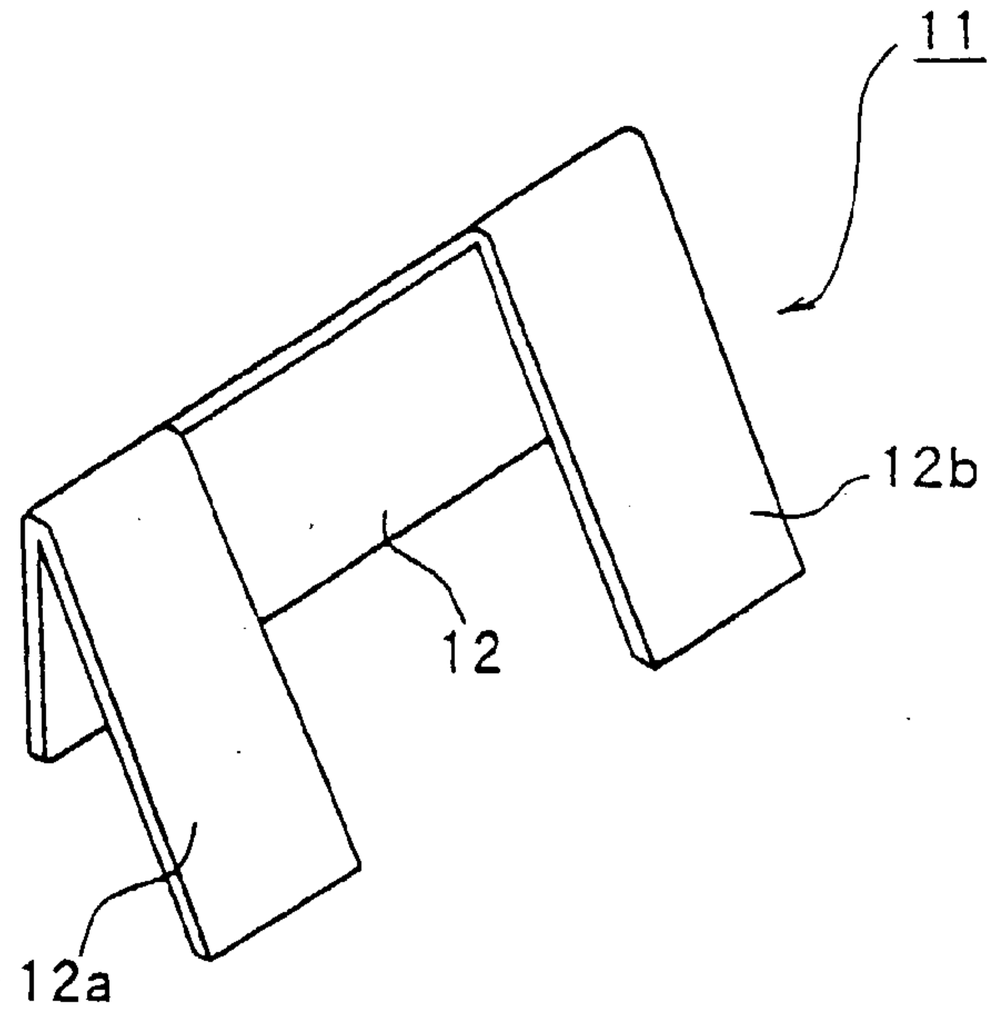

FIG. 2

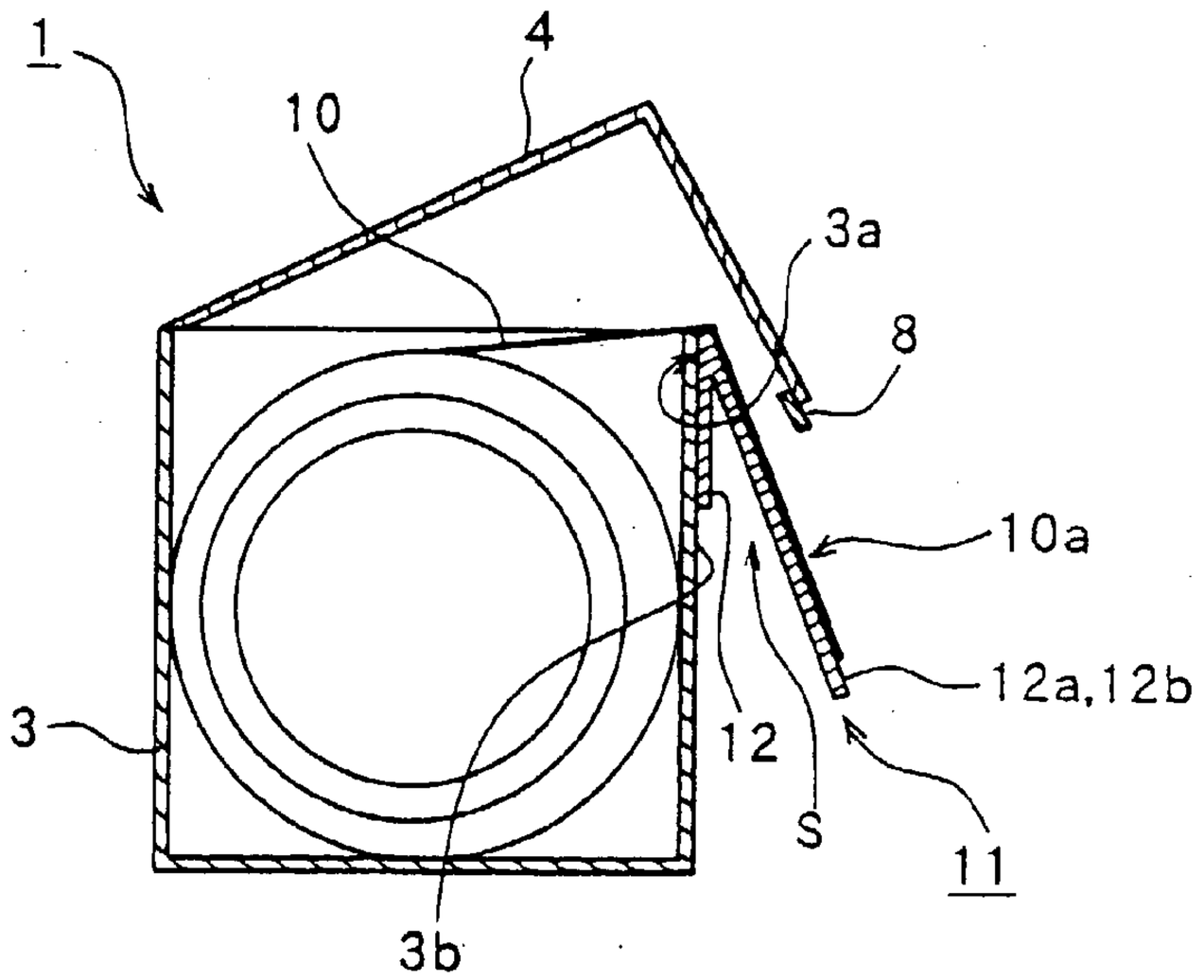

FIG. 4

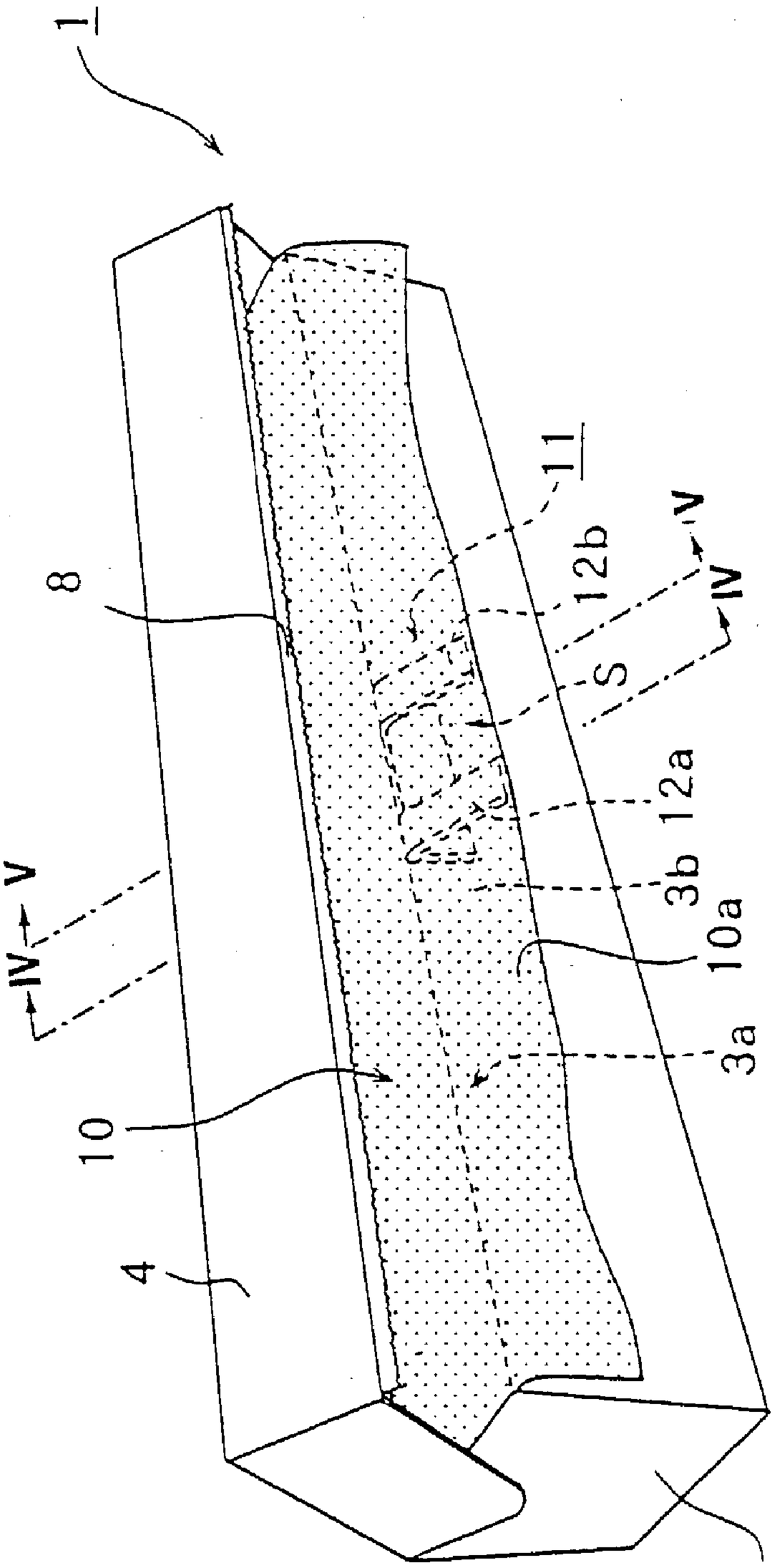

FIG. 3

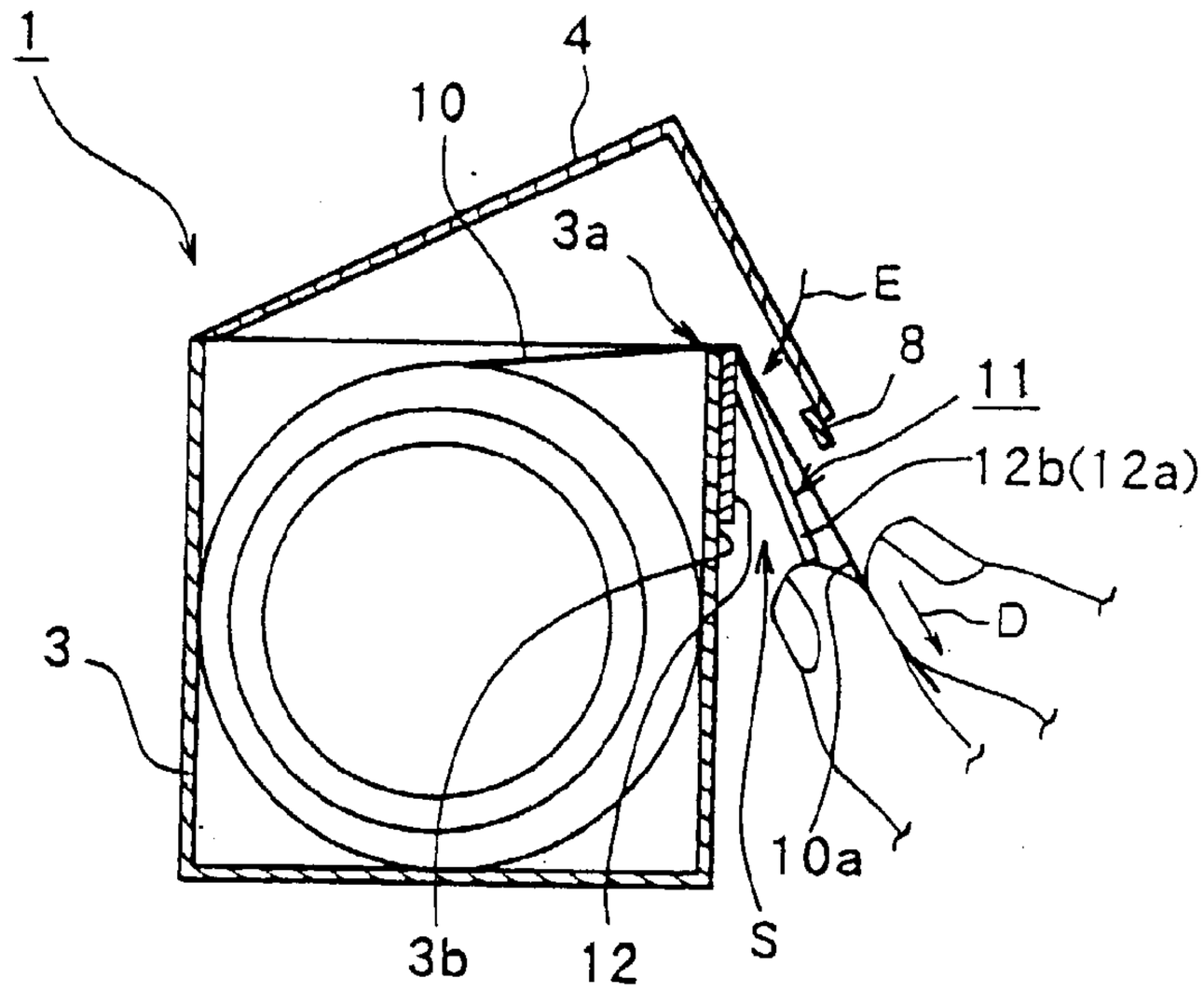

FIG. 5

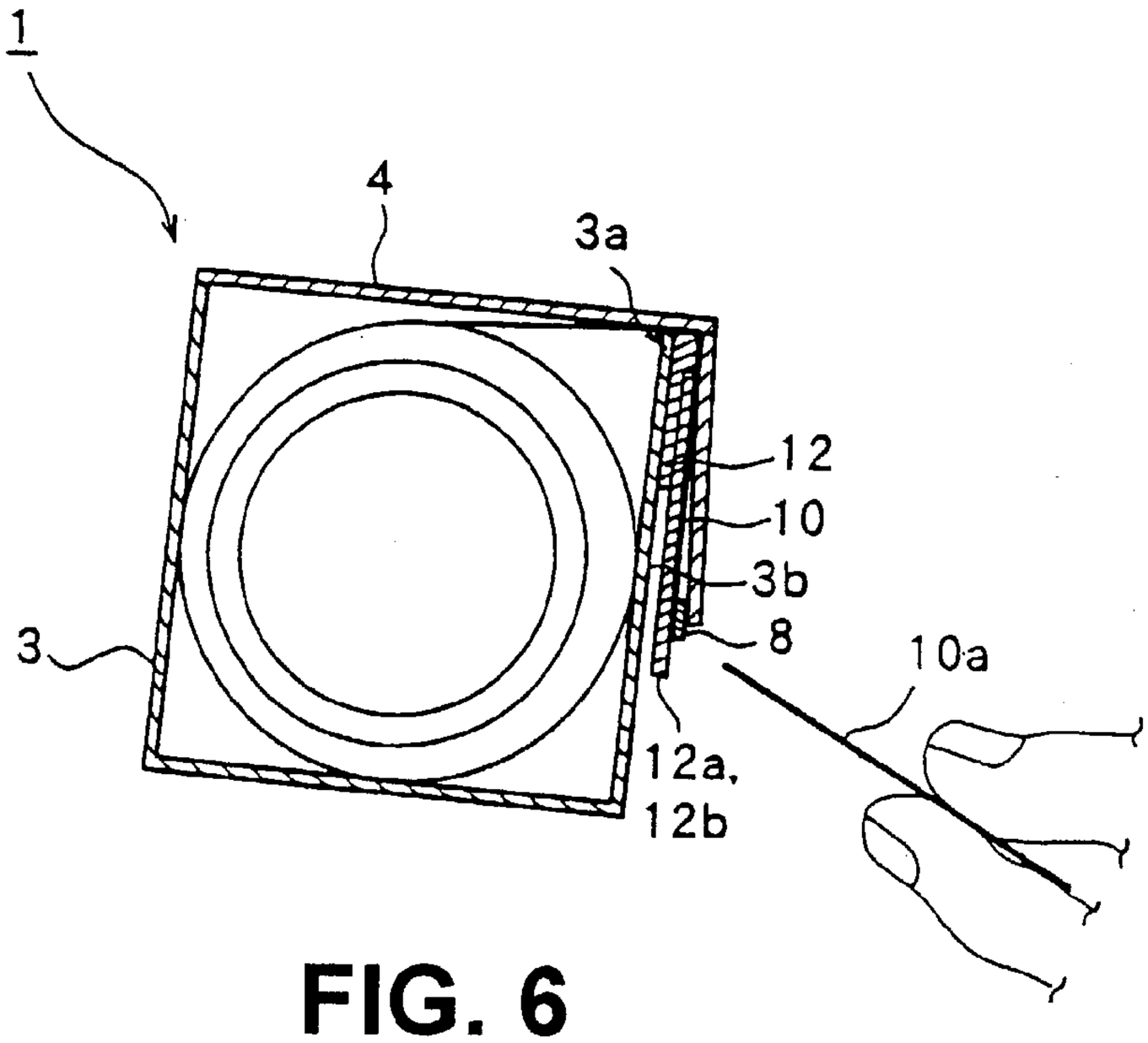

FIG. 6

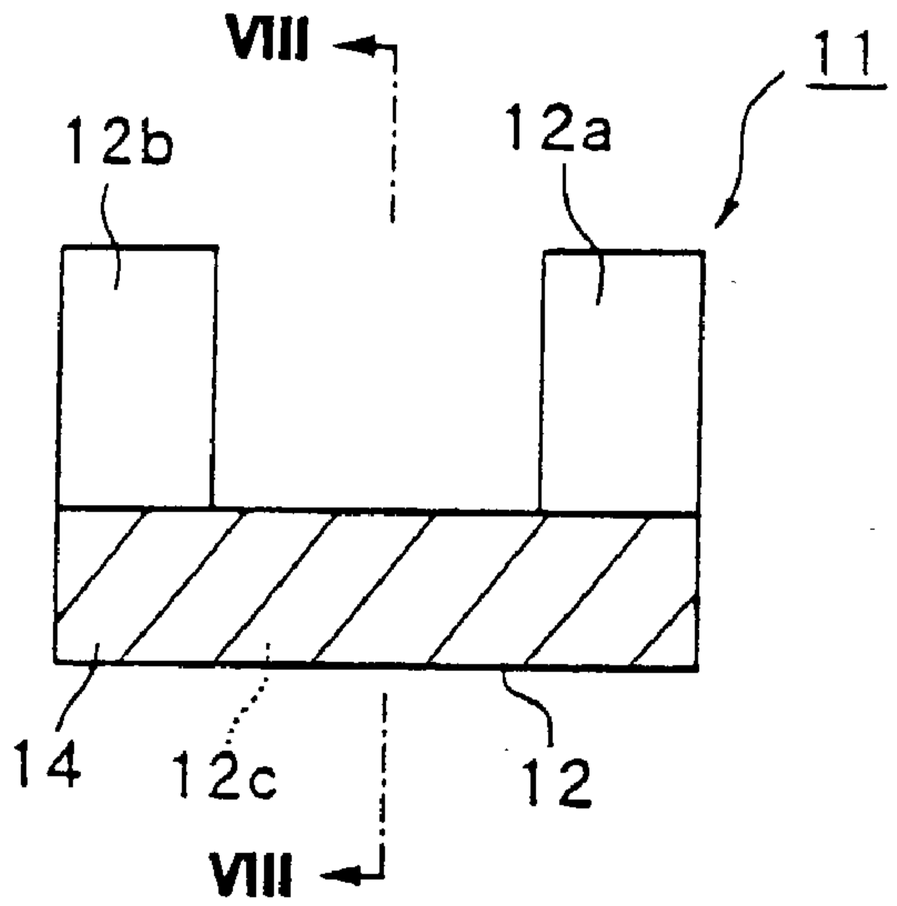

FIG. 7

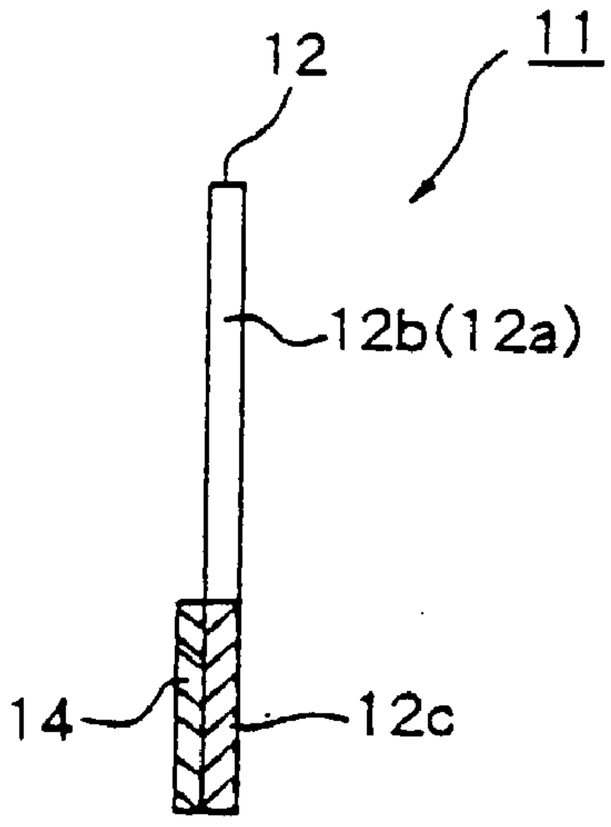

FIG. 8

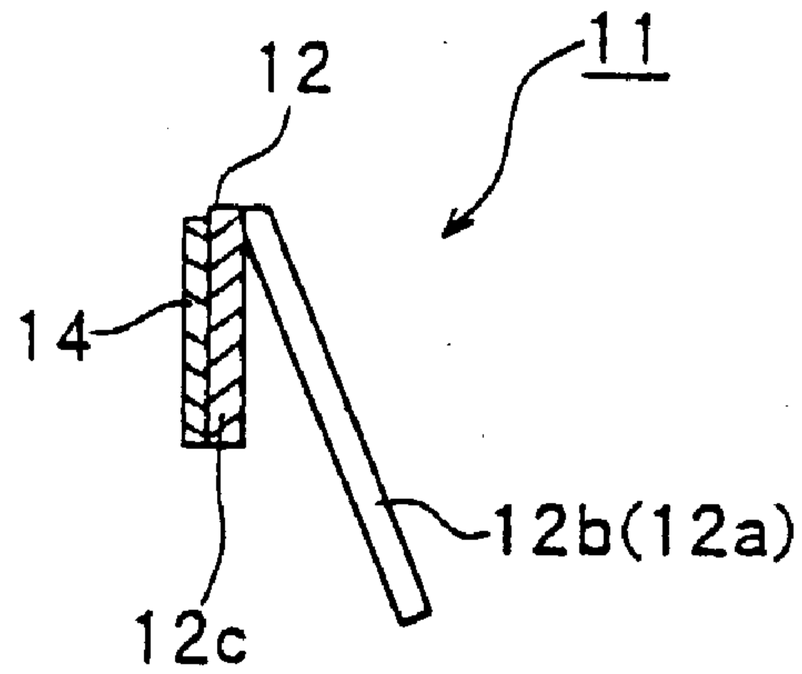

FIG. 9

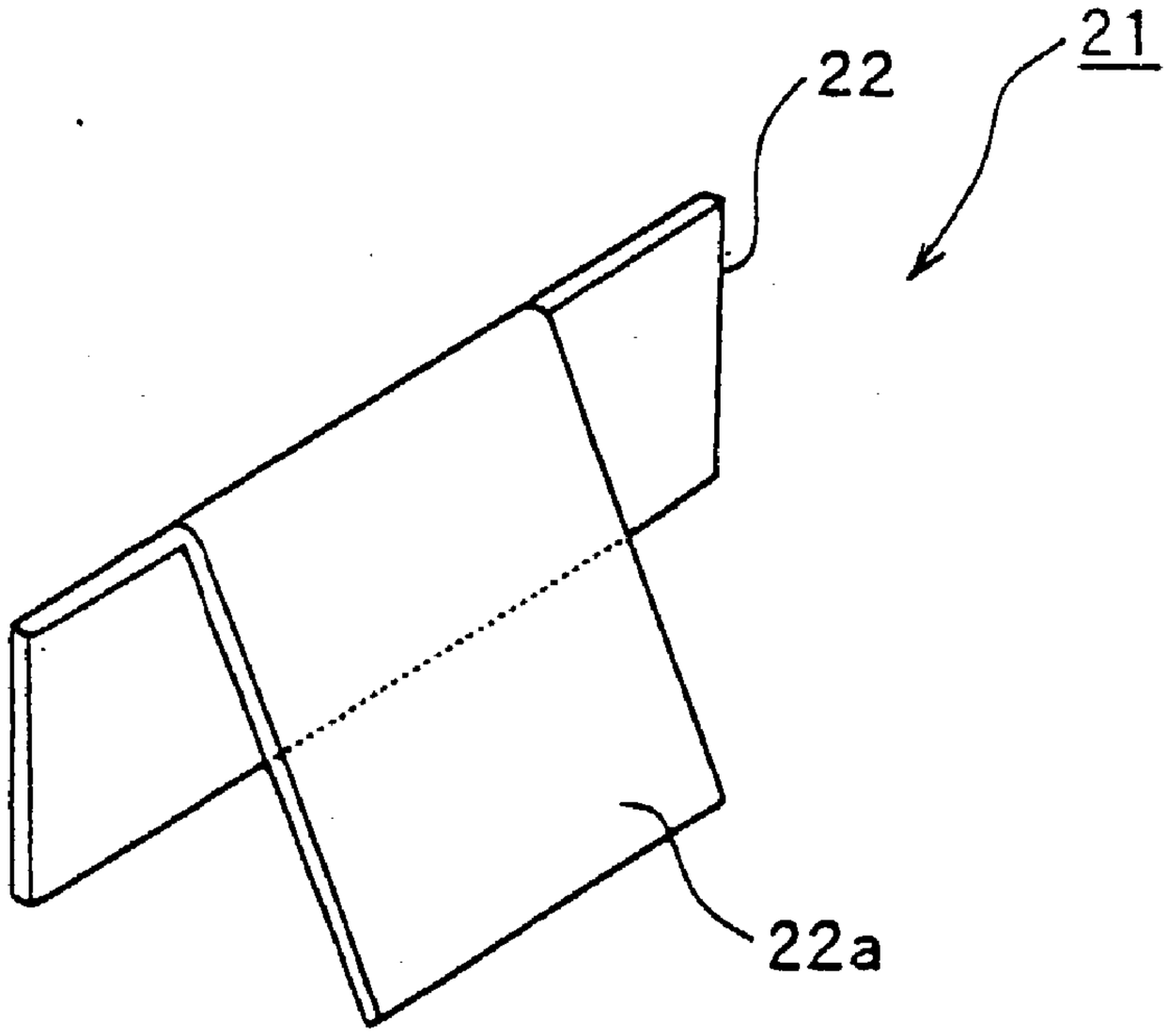

FIG. 10

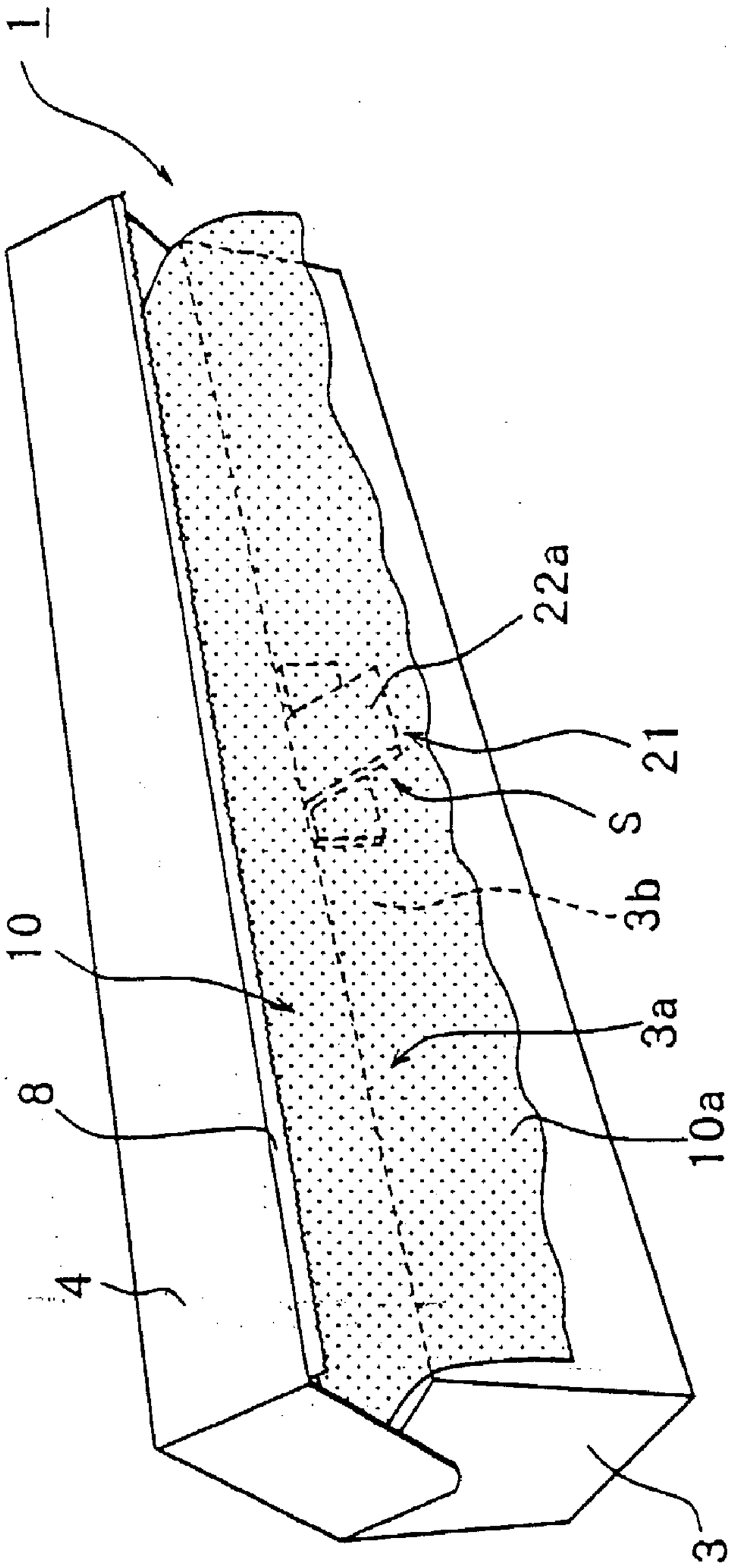

FIG. 11

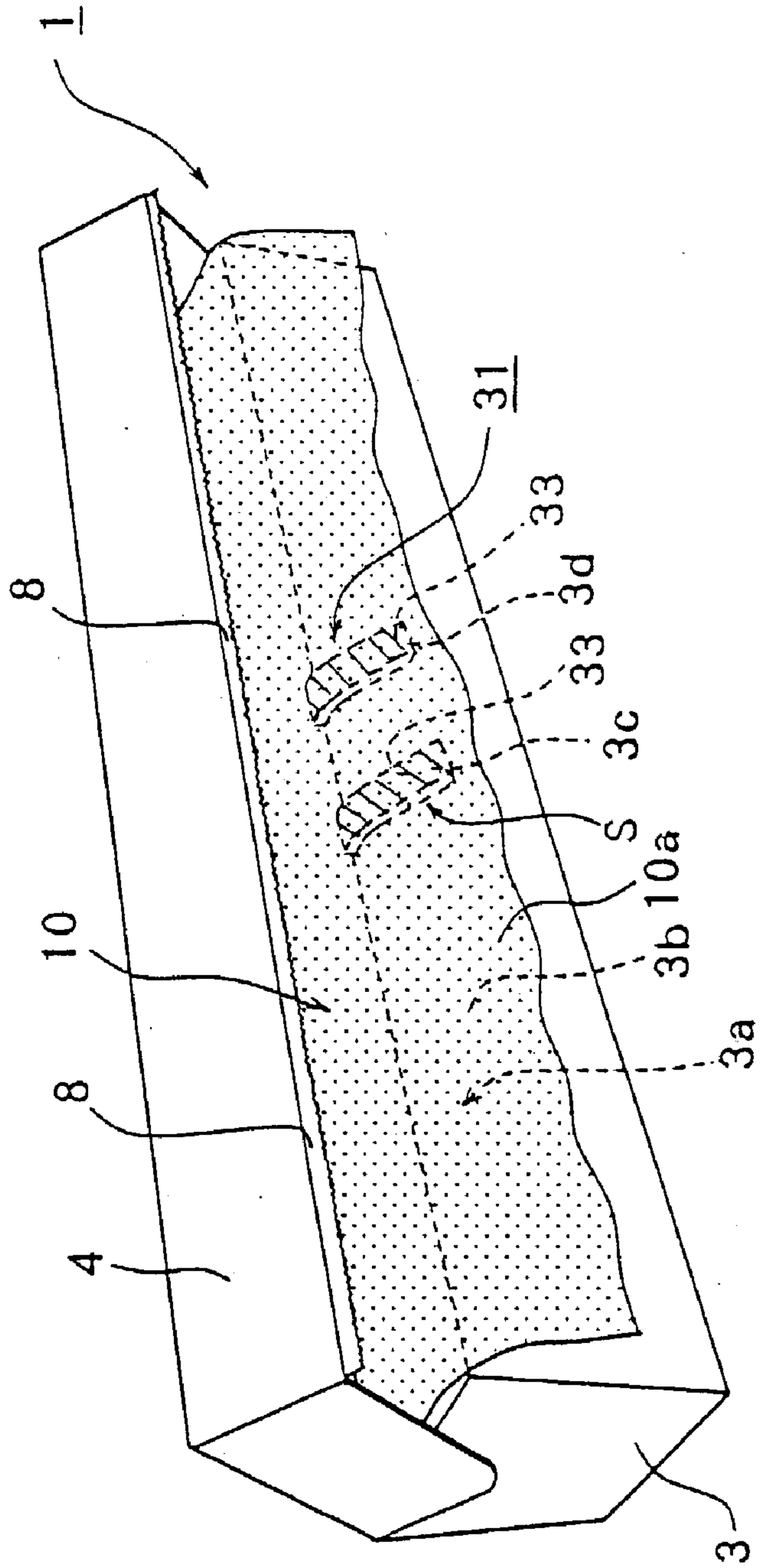

FIG. 12

WRAPPING FILM HOLDING DEVICE

BACKGROUND OF THE INVENTION

[0001] 1. Field of the Invention

[0002] The present invention relates to a wrapping film container, and specifically relates to a wrapping film holding device for holding a portion of wrapping film, which is pulled out through a pullout opening of the wrapping film container, in a state separated from a surface of the wrapping film container on which the pullout opening is formed so that the pulled-out portion of the wrapping film is easy to grip.

[0003] 2. Description of the Related Art

[0004] As a conventional device provided with an opening for pulling out a sheet member, there has been a sheet member container which stores a sheet member inside, and allows pulling out of the stored sheet member outside the sheet member container through the pullout opening formed on the sheet member container.

[0005] As an example of such a conventional sheet member container, there has been a wrapping film container for storing a wrapping film for packing food or the like, which is a sheet member wound into a roll shape, and allowing the wrapping film to be pulled outside the wrapping film container through a pullout opening formed on the wrapping film container.

[0006] In the conventional wrapping film container, adhesive is applied on a surface of the wrapping film container on which the pullout opening is formed (referred to as "pullout opening-formed surface" hereafter) so that a pulled-out portion of the wrapping film adheres to the pullout opening by an adhesive force of the adhesive or electrostatic force generated by electrostatic contact of the film with the surface of the container, thereby to prevent the pulled-out portion of the wrapping film from being retracted into the wrapping film container. Because the wrapping film adheres to the pullout opening-formed surface of the wrapping film container by means of the adhesive or electrostatic force, there is such a problem that removing the adhering wrapping film from the pullout opening-formed surface, and then, gripping the wrapping film is difficult.

SUMMARY OF THE INVENTION

[0007] The present invention has been made in view of the above circumstances, and an object of the present invention is to provide a wrapping film holding device that separates a portion of the wrapping film, which is pulled out through a pullout opening of a wrapping film container, from a pullout opening-formed surface of the wrapping film container, and holding the wrapping film in a state easy to grip.

[0008] According to one aspect of the present invention, a wrapping film holding device provided on a pullout opening-formed surface of a wrapping film container on which a pullout opening for pulling out a wrapping film stored in the contained is formed, such as to face the pullout opening, keeping to energize the wrapping film pulled out through the pullout opening toward a direction departing from the pullout opening-formed surface, whereby a space is secured between the pulled out wrapping film and the pullout opening-formed surface so that the pulled out wrapping film is kept to be separated from the pullout opening-formed surface.

[0009] According to another aspect of the present invention, the aforementioned wrapping film holding device comprises energizing means for keeping to energize the pulled out wrapping film toward the direction departing from the pullout opening-formed surface, and adhesive means for allowing the wrapping film to adhere to or to electrostatically contact with a top surface of the energizing means.

[0010] Other and further objects and effects of the present invention will be easily confirmed from the following detailed description and accompanying drawings.

BRIEF DESCRIPTION OF THE DRAWINGS

[0011] Preferred embodiments of the present invention will be described in detail based on the following drawings, wherein:

[0012] **FIG. 1** is a schematic perspective view of a wrapping film container in which a wrapping film holding device according to a first embodiment of the present invention is provided on the wrapping film container;

[0013] **FIG. 2** is an enlarged schematic perspective view of the wrapping film holding device in **FIG. 1**;

[0014] **FIG. 3** illustrates a state where the wrapping film is pulled out through a pullout opening of the wrapping film container in **FIG. 1**;

[0015] **FIG. 4** is a schematic sectional view of the wrapping film container taken along line IV-IV in **FIG. 3**;

[0016] **FIG. 5** is a schematic sectional view of the wrapping film container taken along line V-V in **FIG. 3**;

[0017] **FIG. 6** is a schematic sectional view illustrating a state where the wrapping film in **FIG. 4** is cut by a cutting means;

[0018] **FIG. 7** is a schematic plan view of the wrapping film holding device in **FIG. 2**, illustrating a state before a pair of tongues are bent;

[0019] **FIG. 8** is a schematic sectional view taken along line VIII-VIII in **FIG. 7**;

[0020] **FIG. 9** is a schematic sectional view of the wrapping film holding device in **FIG. 7**, illustrating a state after a pair of the tongues are bent;

[0021] **FIG. 10** is an enlarged schematic perspective view illustrating a wrapping film holding device of a second embodiment;

[0022] **FIG. 11** is a schematic perspective view of a wrapping film container in which the wrapping film holding device in **FIG. 10** is provided the a wrapping film container; and

[0023] **FIG. 12** is a schematic perspective view of a wrapping film container in which a wrapping film holding device of a third embodiment is formed integrally with the wrapping film container.

DESCRIPTION OF THE EMBODIMENTS

[0024] The following section details a wrapping film holding device of the present invention in terms of first, second, and third embodiments of the wrapping film holding device while referring to the accompanying drawings.

[0025] **FIG. 1** is a schematic perspective view illustrating a state where a wrapping film holding device of a first embodiment is provided on a wrapping film container.

[0026] The wrapping film container **1** in **FIG. 1** contains a wrapping film **10** that is wound in a roll shape. The wrapping film container **1** comprises a container body **3** for containing the wrapping film **10** by covering surfaces except for a top surface of the wrapping film **10**, and a lid portion **4** for covering the top face of the container body **3**. The lid portion **4** is connected with an edge of one side of the container body **3** such as to open and close the top face of the container body **3**. An edge on the opposite side of the container body **3** serves as a pullout opening **3***a* for pulling out the contained wrapping film **10**. The container body **3** and the lid portion **4** are integrally formed, and the wrapping film container **1** is generally made of thick paper. A cutting means **8** for cutting a leading end **10***a* of the wrapping film **10** is provided on an end of the lid portion **4**.

[0027] A conventional adhesive (not shown) is provided on a surface **3***b* of the container body **3** on which the pullout opening **3***a* is formed for preventing the leading end **10***a* of the wrapping film **10** having pulled out through the pullout opening **3***a* from being retracted into the wrapping film container **1** (This surface **3***b* is referred to as "pullout opening-formed surface" hereafter). A wrapping film holding device **11** of the first embodiment is provided on the surface of the container body **3** such that it faces the pullout opening **3***a*.

[0028] Referring to **FIG. 2**, the wrapping film holding device **11** of the first embodiment comprises a plate spring **12** including a pair of tongues **12***a* and **12***b* separated from each other with a predetermined interval. The plate spring **12** keeps to apply an energizing force to the tips of the tongues **12***a* and **12***b* toward the direction departing from the pullout opening-formed surface **3***b* (**FIG. 1**). With this energizing force, in a state where the lid portion **4** is opened (**FIG. 1**), predetermined spaces are formed between the tongues **12***a* and **12***b* of the plate spring **12** and the pullout opening-formed surface **3***b* of the wrapping film container **1**. The plate spring **12** is made of vinyl chloride resin.

[0029] In the wrapping film container **1** of the above-described constitution, after the leading end **10***a* of the wrapping film **10** is pulled out from the container body **3** through the pullout opening **3***a* in the direction of an arrow A in **FIG. 1** while the lid portion **4** is kept opened, the leading end **10***a* of the wrapping film **10** is placed on the pair of tongues **12***a* and **12***b* so that it is always energized toward a direction departing from the pullout opening-formed surface **3***b* by the pair of tongues **12***a* and **12***b* as shown in **FIG. 3** and **FIG. 4**. Thus, a space S is secured between the leading end **10***a* of the wrapping film **10** and the pullout opening-formed surface **3***b* of the container body **3**. As a result, the leading end **10***a* of the wrapping film **10** is separated from the pullout opening-formed surface **3***b* by the space S, and is held by the tongues **12***a* and **12***b*.

[0030] As shown in **FIG. 5**, this configuration of the container **1** makes it possible to separate the leading end **10***a* of the wrapping film **10** from the pullout opening-formed surface **3***b*, and it is possible to insert the finger into the space S and grip the leading end **10***a* of the wrapping film **10** separated from the pullout opening-formed surface **3***b*. Consequently, it is easier to separate the leading end **10***a* of the wrapping film **10** from the pullout opening-formed surface **3***b*, and to grip it compared with the conventional wrapping film container **1** where the leading end **10***a* of the wrapping film **10** adheres to the pullout opening-formed surface **3***b* with the adhesive.

[0031] Especially, since the leading end **10***a* of the wrapping film **10** between the pair of tongues **12***a* and **12***b* adheres to and is held by the pair of tongues **12***a* and **12***b* through an adhesive force or electrostatic contact due to vinyl chloride resin which is the material of the tongues **12***a* and **12***b* provided on both the sides, and is always energized toward the direction departing from the pullout opening-formed surface **3***b* by the energizing force of the plate spring **12** applied to the tips of the pair of tongues **12***a* and **12***b*, the space S can be secured between the leading end **10***a* of the wrapping film **10** between the pair of tongues **12***a* and **12***b* and the pullout opening-formed surface **3***b*. Thus, the leading end **10***a* of the wrapping film **10** between the pair of tongues **12***a* and **12***b* is separated from the pullout opening-formed surface **3***b*, and is held by the pair of tongues **12***a* and **12***b*. Thus, by gripping the leading end **10***a* of the wrapping film **10** between the pair of tongues **12***a* and **12***b* by the fingers, it is easy to separate the leading end **10***a* of the wrapping film **10** from the pullout opening-formed surface **3***b*, and grip it.

[0032] In addition, since the pair of tongues **12***a* and **12***b* are made of vinyl chloride resin, the leading end **10***a* of the wrapping film **10** placed on (held by) the pair of tongues **12***a* and **12***b* adheres to the top surfaces of the pair of tongues **12***a* and **12***b* by the adhesive force or the electrostatic contact with vinyl chloride resin. Consequently, the possibility that the front end side **10***a* of the wrapping film **10** is retracted into the wrapping film container **1** is reduced as much as possible.

[0033] Then, as shown in **FIG. 5**, after the gripped leading end **10***a* of the wrapping film **10** is pulled up slightly in the direction departing from the pullout opening-formed surface **3***b* so as to separate from the top surfaces of the pair of tongues **12***a* and **12***b*, the gripped leading end **10***a* is pulled out further in a direction indicated by an arrow D. Thereafter, the top surface of the container body **3** is covered with the lid portion **4**, and a portion of the pulled-out leading end **10***a* of the wrapping film **10** is covered with the lid portion **4**.

[0034] Then, as shown in **FIG. 6**, the plate spring **12** is elastically deformed by the pressing force applied by the lid portion **4** and consequently the pair of tongues **12***a* and **12***b* retract toward the pullout opening-formed surface **3***b* against the energizing force of the plate spring **12**. As a result, the space S is eliminated, and the aforementioned portion of the leading end **10***a* of the wrapping film **10** is gripped between the pullout opening-formed surface **3***b* and the lid portion **4**, between the pullout opening-formed surface **3***b* and the cutting means **8**, between the pair of tongues **12***a* and **12***b* and the lid portion **4**, and between the pair of tongues **12***a* and **12***b* and the cutting means **8**.

[0035] Next, when the lid portion **4** is tilted toward the inside of the container body **3** while the leading end **10***a* of the wrapping film **10**, which is not gripped between the pullout opening-formed surface **3***b* and the lid portion **4**, between the pullout opening-formed surface **3***b* and the cutting means **8**, between the pair of tongues **12***a* and **12***b*

and the lid portion **4**, and between the pair of tongues **12***a* and **12***b* and the cutting means **8**, is pulled by the fingers toward the direction of the arrow D in **FIG. 5, a** trailing end of the portion of the leading end **10***a* of the wrapping film **10** which is not gripped comes in contact with a blade at the tip of the cutting means **8**. Thus, the leading end **10***a* of the wrapping film **10** which is not held is cut from the wrapping film **10**.

[**0036**] After the leading end **10***a* of the wrapping film **10** which is not gripped is cut, when the lid portion **4** is opened, the tips of the tongues **12***a* and **12***b* are returned by the energizing force of the plate spring **12** to the initial state where the predetermined space is formed between the tongues **12***a* and **12***b* and the pullout opening-formed surface **3***b* as shown in **FIG. 3** and **FIG. 4**. As a result, the gripped wrapping film **10** remaining on the pullout opening **3***a* side after cutting the wrapping film **10** becomes a new leading end **10***a* of the wrapping film **10**, and is placed on the pair of tongues **12***a* and **12***b* while it is always energized by the energizing force of the plate spring **12** applied to the tips of the pair of tongues **12***a* and **12***b* toward the direction departing from the pullout opening-formed surface **3***b*. Thus, the space S is again secured by the energizing force of the plate spring **12** between the new leading end **10***a* of the wrapping film **10** and the pullout opening-formed surface **3***b*. With the space S, the leading end **10***a* of the wrapping film **10** is separated from the pullout opening-formed surface **3***b*, and is held by the pair of tongues **12***a* and **12***b*. This make it easy to separate the leading end **10***a* of the wrapping film **10** from the pullout opening-formed surface **3***b* and hold it by inserting the finger into the space S and grip the separated leading end **10***a* of the wrapping film **10**.

[**0037**] Since the new leading end **10***a* of the wrapping film **10** adheres to the top surfaces of the pair of tongues **12***a* and **12***b* by the adhesive force or the electrostatic contact with vinyl chloride resin which is the material of the pair of tongues **12***a* and **12***b*, the possibility that the leading end **10***a* of the wrapping film **10** is retracted into the wrapping film container **1** is reduced as much as possible.

[**0038**] The new leading end **10***a* of the wrapping film **10** is cut into a desired length for use by the actions of pulling out the wrapping film **10**, closing the lid portion **4**, and cutting. Therefore, if the actions of separating the wrapping film **10** from the pullout opening-formed surface **3***b* and gripping it becomes easier, the wrapping film **10** in the wrapping film container **1** becomes easier to use.

[**0039**] Referring to **FIG. 7** illustrating the plate spring **12** before a pair of tongues are bent, the plate spring **12** constituting the wrapping film holding device **11** according to the first embodiment is manufactured by machining a plate member to form the pair of tongues **12***a* and **12***b*, and a base **12***c* for connecting the pair of tongues **12***a* and **12***b* with each other. As shown in **FIG. 8** which is a schematic sectional view taken along line VIII-VIII in **FIG. 7**, one tape surface of a double-stick tape **14** is stuck in advance to one surface of the base **12***c* of the plate member. As shown in **FIG. 9**, the pair of tongues **12***a* and **12***b* are bent toward the opposite side of the double-stick tape **14**. As a result, a spring force against the bend of the pair of tongues **12***a* and **12***b* always energizes the tips toward the direction departing from the base **12***c*. This completes the manufacture of the plate spring **12**. A predetermined angle (such as about 20 degrees) is formed between the pair of tongues **12***a* and **12***b* and the base **12***c* on the manufactured plate spring **12**. By allowing the first wrapping film holding device **11** constituted by the plate spring **12** to adhere to the pullout opening-formed surface **3***b* at a position facing the pullout opening **3***a* via the other tape surface of the double-stick tape **14**, the first wrapping film holding device **11** is mounted on the pullout opening-formed surface **3***b* at the position facing the pullout opening **3***a* as shown in **FIG. 1**.

[**0040**] Since the form of the wrapping film holding device **11** with the pair of tongues **12***a* and **12***b* being bent as shown in **FIG. 9** is larger in size compared with that before bending the tongues as shown in **FIG. 7** and **FIG. 8**, the device is generally sold in the form before bending the pair of tongues **12***a* and **12***b*.

[**0041**] When a user buys the wrapping film holding device **11** in the form before bending, the user attaches one tape surface of a double-stick tape **14** to the base **12***c* of the plate spring **12** after the pair of tongues **12***a* and **12***b* are bent as shown in **FIG. 9**. Then, the plate spring on which the double-stick tape **14** is attached on the pullout opening-formed surface **3***b* of the wrapping film container **1** with the other tape surface of the double-stick tape being oriented toward the pullout opening-formed surface **3***b*.

[**0042**] It is also possible to sell the wrapping film holding device **11** with the pair of tongues **12***a* and **12***b* being bent as shown in **FIG. 9**

[**0043**] While the wrapping film holding device **11** of the first embodiment is constituted by the plate spring **12** comprising the pair of tongues **12***a* and **12***b* separated by the predetermined interval, the plate spring constituting the wrapping film holding device of the present invention may be a plate spring **22** comprising a single tongue **22***a* as a wrapping film holding device **21** according to a second embodiment as shown in its enlarged schematic perspective view in **FIG. 10**.

[**0044**] Referring to **FIG. 11**, in the wrapping film container **1** where the wrapping film holding device **21** of the second embodiment is provided on the pullout opening-formed surface **3***b* of the container body **3** such that it faces the pullout opening **3***a*, the leading end **10***a* of the wrapping film **10** pulled out through the pullout opening **3***a* is placed on a top surface of the single tongue **22***a*, and is kept to be energized toward a direction departing from the pullout opening-formed surface **3***b* by a tip of the tongue **22***a*. As a result, the space S is secured between the leading end **10***a* of the wrapping film **10** and the pullout opening-formed surface **3***b*. With this space S, the leading end **10***a* of the wrapping film **10** is separated from the pullout opening-formed surface **3***b*, and is held by the tongue **22***a*. Thus, by inserting the finger into the space S to grip the leading end **10***a* of the wrapping film **10** separated from the pullout opening-formed surface **3***b*, it is easy to separate the leading end **10***a* of the wrapping film **10** from the pullout opening-formed surface **3***b* and hold it.

[**0045**] Since the leading end **10***a* of the wrapping film **10** placed on and held by the top surface of the tongue **22***a* adheres to the top surface of the tongue **22***a* by the adhesive force or the electrostatic contact of vinyl chloride resin, which is the material of the tongue **22***a* of the plate spring **22**, the possibility that the front end side **10***a* of the wrapping film **10** is retracted into the wrapping film container **1** is reduced.

[0046] The wrapping film holding device **21** of the second embodiment is generally sold in the form before bending the tongue **22***a* as the wrapping film holding device **11** of the first embodiment, and a user of the wrapping film container **1** who buys the wrapping film holding device **21** attaches the device on the pullout opening-formed surface **3***b* at the position facing the pullout opening **3***a* after the tongue **22***a* is bent.

[0047] It is also possible to sell the wrapping film holding device **21** with the pair of tongues **12***a* and **12***b* being bent as in the wrapping file holding device **11** in the first embodiment.

[0048] While each of the tongues **12***a*, **12***b*, and **22***a* of the plate springs **12** and **22** in the wrapping film holding devices **11** and **21** is made of vinyl chloride resin in the first and second embodiment, the tongues **12***a*, **12***b*, and **22***a* of the plate springs **12** and **22** may be made of other materials having a characteristic that allows the materials to electrostatically contact with or to adhere to the wrapping film **10**, and may be made of polypropylene (PP), for example. By using the tongues **12***a*, **12***b*, and **22***a* of the plate springs **12** and **22** made of vinyl chloride resin or polypropylene, the wrapping film **10** surely electrostatically contacts with or adheres to the top surface of the tongues **12***a*, **12***b*, and **22***a* of the plate springs **12** and **22**. Therefore, the effect of preventing the leading end **10***a* of the wrapping film **10** from being retracted increases, and the space S is easily secured between the leading end **10***a* of the wrapping film **10** and the pullout opening-formed surface **3***b* of the container body **3**, thereby increasing the effect of separating the leading end **10***a* of the wrapping film **10** from the pullout opening-formed surface **3***b* and holding it.

[0049] In the wrapping film holding devices **11** and **21**, material of the plate springs **12** and **22** is selected such that the tongues **12***a*, **12***b*, and **22***a* of the plate springs **12** and **22** which are the energizing means for always energizing the pulled out wrapping film **10** toward the direction departing from the pullout opening-formed surface **3***b* are used as the adhesive means for allowing the wrapping film **10** to adhere onto or to electrostatically contact with the top surfaces of the tongues **12***a*, **12***b* and **22***a* of the plate springs **12** and **22**. By this selection of the material of the plate springs, in manufacturing the wrapping film container **1** in which gripping of the pulled out wrapping film is made easier, the manufacturing cost can be reduced because the step of providing the adhesive means is not necessary. However, the adhesive means is not limited to that described above, and may be provided separately to the plate springs **12** and **22**, or adhesive may be applied on the top surface of the tongues **12***a*, **12***b*, and **22***a* of the plate springs **12** and **22**, for example.

[0050] Also, while the wrapping film holding device **11** and **21** in the first and second embodiments comprises the plate spring **12** and **22** which is a member separate from the wrapping film container **1**, a wrapping film holding device of the present invention may be formed integrally with the wrapping film container **1**.

[0051] **FIG. 12** is a schematic perspective view showing a state where a wrapping film holding device **31** of a third embodiment is formed integrally with a wrapping film container **1**.

[0052] The wrapping film holding device **31** of the third embodiment comprises a pair of tongues **3***c* and **3***d* formed integrally with the container body **3** of the wrapping film container **1**. The pair of tongues **3***c* and **3***d* are provided on the pullout opening-formed surface **3***b* of the container body **3** such that they face the pullout opening **3***a*, and are separated by a certain interval. In addition, the tongues **3***c* and **3***d* are bent toward the pullout opening-formed surface **3***b*, and adhesive **33** is applied to the top surface of the pair of tongues **3***c* and **3***d*.

[0053] Since a leading end **10***a* of a wrapping film **10** pulled out through the pullout opening **3***a* is placed on top surfaces of the pair of tongue **3***c* and **3***d*, and is kept to be energized toward a direction departing from the pullout opening-formed surface **3***b* of the wrapping film container **1** by an elastic force generated by the bend of the pair of tongues **3***c* and **3***d* in the wrapping film container **1** where the wrapping film holding device **31** of the third embodiment is provided on the pullout opening-formed surface **3***b* of the container body **3** such that it faces the pullout opening **3***a* as shown in **FIG. 12**. As a result, a space S is secured between the leading end **10***a* of the wrapping film **10** and the pullout opening-formed surface **3***b*. With this space S, the leading end **10***a* of the wrapping film **10** is separated from the pullout opening-formed surface **3***b*, and is held by the pair of tongues **3***c* and **3***d*. Thus, the action of separating the leading end **10***a* of the wrapping film **10** from the pullout opening-formed surface **3***b* and gripping it becomes easy as a result of inserting the finger into the space S to hold the leading end **10***a* of the wrapping film **10** separated from the pullout opening-formed surface **3***b*.

[0054] Since the leading end **10***a* of the wrapping film **10** pulled out through the pullout opening **3***a* adheres to the top surfaces of the pair of tongues **3***c* and **3***d* by an adhesive force or electrostatic contact of the adhesive **33** which is the adhesive means, the possibility that the leading edge side **10***a* of the wrapping film **10** is retracted into the wrapping film container **1** is reduced.

[0055] In addition, the wrapping film container **1** and the wrapping film holding device **31** are integrally formed for the wrapping film holding device **31** of the third embodiment, and die cutting for the wrapping film container **1** and die cutting for the pair of tongues **3***c* and **3***d* of the wrapping film holding device **31** are conducted simultaneously in manufacturing the wrapping film container **1**. Therefore, it is possible to simplify the operation for manufacturing the wrapping film container which promotes gripping the pulled out wrapping film, and to reduce the manufacturing cost compared with the case where die cutting for the wrapping film container **1** and die cutting for the wrapping film holding device are conducted independently as in the holding devices **11** and **21** for wrapping film of the first and second embodiments.

[0056] In the wrapping film holding devices **11** and **12** of the first and second embodiments, the plate springs **12** and **22** are used as energizing means which is provided at the position facing the pullout opening **3***a* on the pullout opening-formed surface **3***b*, and always energizes the leading end **10***a* of the wrapping film **10** pulled out through the pullout opening **3***a* toward the direction departing from the pullout opening-formed surface **3***b*. However, the energizing means for the wrapping film holding device of the present invention is not limited to this constitution, and the energizing means may be a pair of springs provided at positions facing the

pullout opening **3***a* on the pullout opening-formed surface **3***b*, and are separated by a predetermined interval, and tips of the springs always energize the leading end **10***a* of the pulled out wrapping film **10** toward the direction departing from the pullout opening-formed surface **3***b*.

[**0057**] As described above, the wrapping film holding devices **11**, **21**, and **31** of the first through third embodiments are provided so as to face the pullout opening **3***a* on the pullout opening-formed surface **3***b* of the wrapping film container **1** for containing the wrapping film **10** wound into a roll shape. The present invention can be applied to a sheet member holding device for holding a sheet member other than a wrapping film. If the sheet member holding device of the present invention is provided so as to face a pullout opening on a pullout opening-formed surface of a sheet member container for (such as a container for loading and containing a sheet member) other than the wrapping film container, it is possible to simplify the action for separating the sheet pulled out through the pullout opening from the pullout opening-formed surface, and gripping it.

[**0058**] Further, as described above, since the wrapping film holding device of the present invention is provided so as to face the pullout opening on the pullout opening-formed surface of the wrapping film container, and always energizes the wrapping film pulled out through the pullout opening toward the direction departing from the pullout opening-formed surface for securing the space between the pulled out wrapping film and the pullout opening-formed surface, and then, utilizes the secured space for separating the pulled out wrapping film from the pullout opening-formed surface, and gripping it, the secured space is used to grip the separated wrapping film with the fingers, and thus, the action of separating the pulled out wrapping film from the pullout opening-formed surface and gripping it becomes easy compared with the conventional constitution.

[**0059**] In addition, when the wrapping film holding device of the present invention comprises the energizing means for always energizing the pulled out wrapping film toward the direction departing from the pullout opening-formed surface, and the adhesive means for allowing the wrapping film to adhere to the top surface of the energizing means, or to electrostatically contact with the top surface, it is possible to use the adhesive means to prevent the wrapping film from being retracted as much as possible in addition to the aforementioned effect of facilitating the action of separating and gripping the pulled out wrapping film.

What is claimed is:

1. A wrapping film holding device which is provided on a pullout opening-formed surface of a wrapping film container storing a wrapping film on which a pullout opening for pulling out the wrapping film is formed, such as to face the pullout opening, and always energizes the wrapping film pulled out through the pullout opening toward a direction departing from the pullout opening-formed surface, whereby a space is secured between the pulled out wrapping film and the pullout opening-formed surface so that the pulled out wrapping film is kept to be separated from the pullout opening-formed surface.

2. The wrapping film holding device according to claim 1 comprising:

energizing means for keeping to energize the pulled out wrapping film toward the direction departing from the pullout opening-formed surface, and

adhesive means for allowing the wrapping film to adhere to or to electrostatically contact with a top surface of the energizing means.

3. The wrapping film holding device according to claim 2, wherein the energizing means comprises a plate spring including a pair of tongues separated from each other by a predetermined interval and keeping to energize the pulled out wrapping film at tips of the pair of tongues toward the direction departing from the pullout opening-formed surface.

4. The wrapping film holding device according to claim 2, wherein the energizing means comprises a plate spring including a tongue and keeps to energize the pulled out wrapping film at a tip of the tongue toward the direction departing from the pullout opening-formed surface.

5. The wrapping film holding device according to claim 2, wherein the energizing means is formed integrally with the wrapping film container.

* * * * *