US 20030192264A1

(19) **United States**

(12) **Patent Application Publication**

Boggs

(10) **Pub. No.: US 2003/0192264 A1**

(43) **Pub. Date: Oct. 16, 2003**

(54) **EAVE TRIMMING ELEMENT**

(76) Inventor: **David Boggs**, Bermuda Dunes, CA (US)

Correspondence Address:
SHELDON & MAK
Suite 900
225 South Lake Avenue
Pasadena, CA 91101 (US)

(21) Appl. No.: **10/121,114**

(22) Filed: **Apr. 10, 2002**

Publication Classification

(51) **Int. Cl.**[7] **E04D 3/40**; E04B 7/00; E04D 13/00

(52) **U.S. Cl.** **52/94**; 52/95; 52/96; 52/287.1

(57) **ABSTRACT**

A method for trimming the eaves of a building consists of enclosing the eaves with a plurality of prefabricated eave trimming elements, each of which can be made from a lightweight thermoplastic material formed in an extrusion process. Each eave trimming element is a panel having a generally trapezoid shape, typically a rectangular shape. The upper portion of the rearward side of the panel can have a notch with a generally vertical surface and a generally horizontal surface. The bottom portion of the rearward side of the panel is typically flat and is disposed substantially parallel to the notch vertical surface.

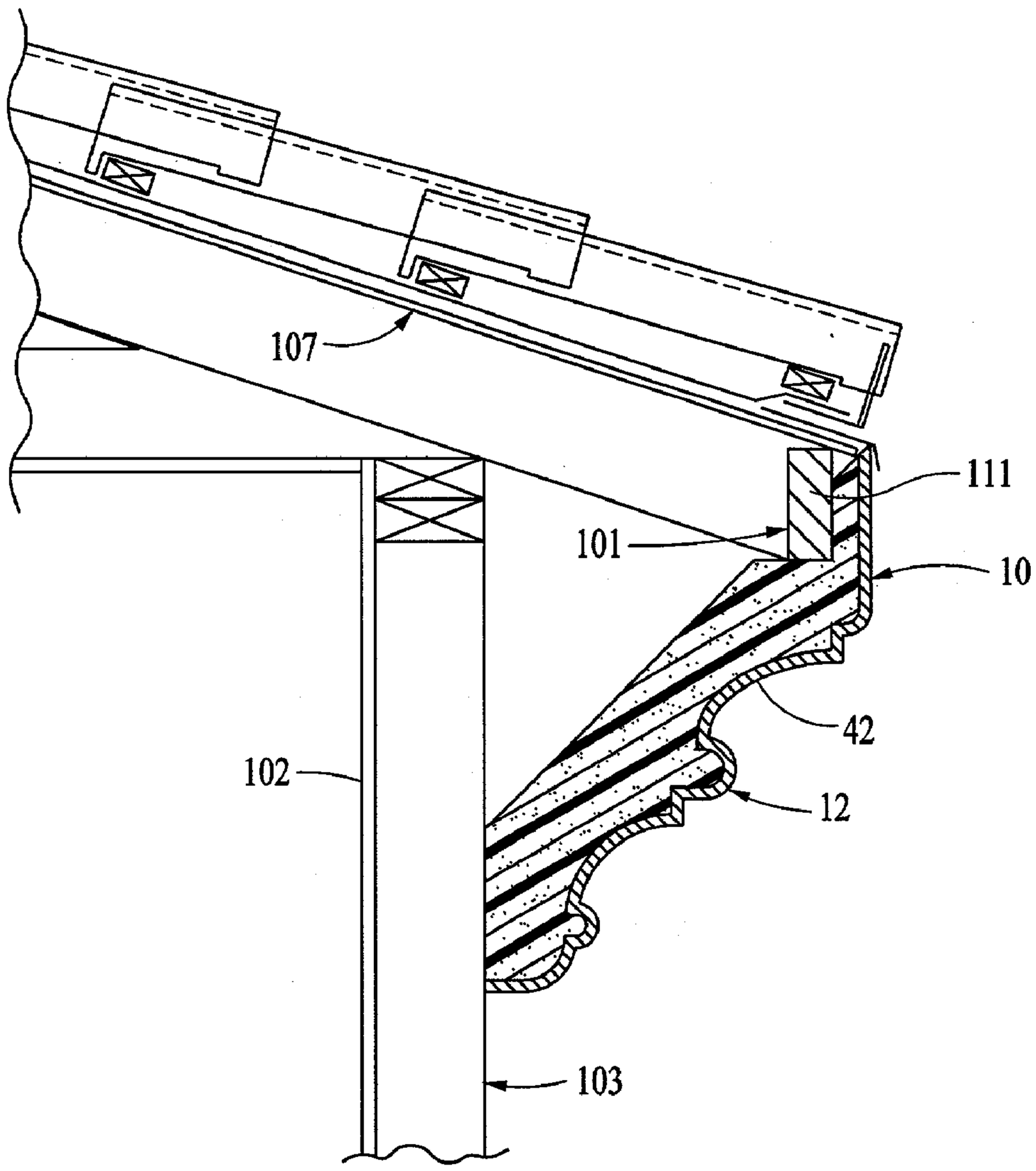

FIG. 1

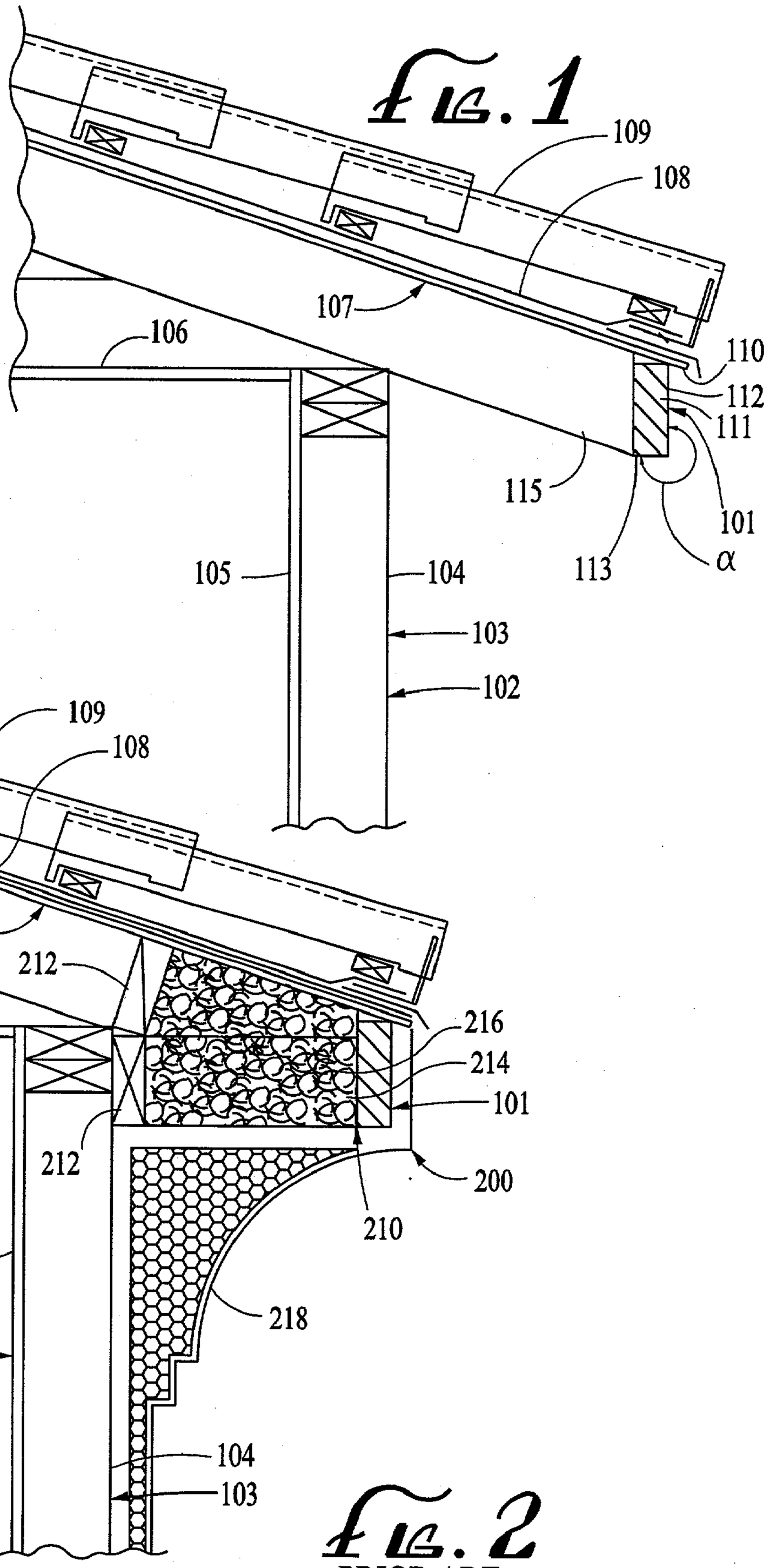

FIG. 2
PRIOR ART

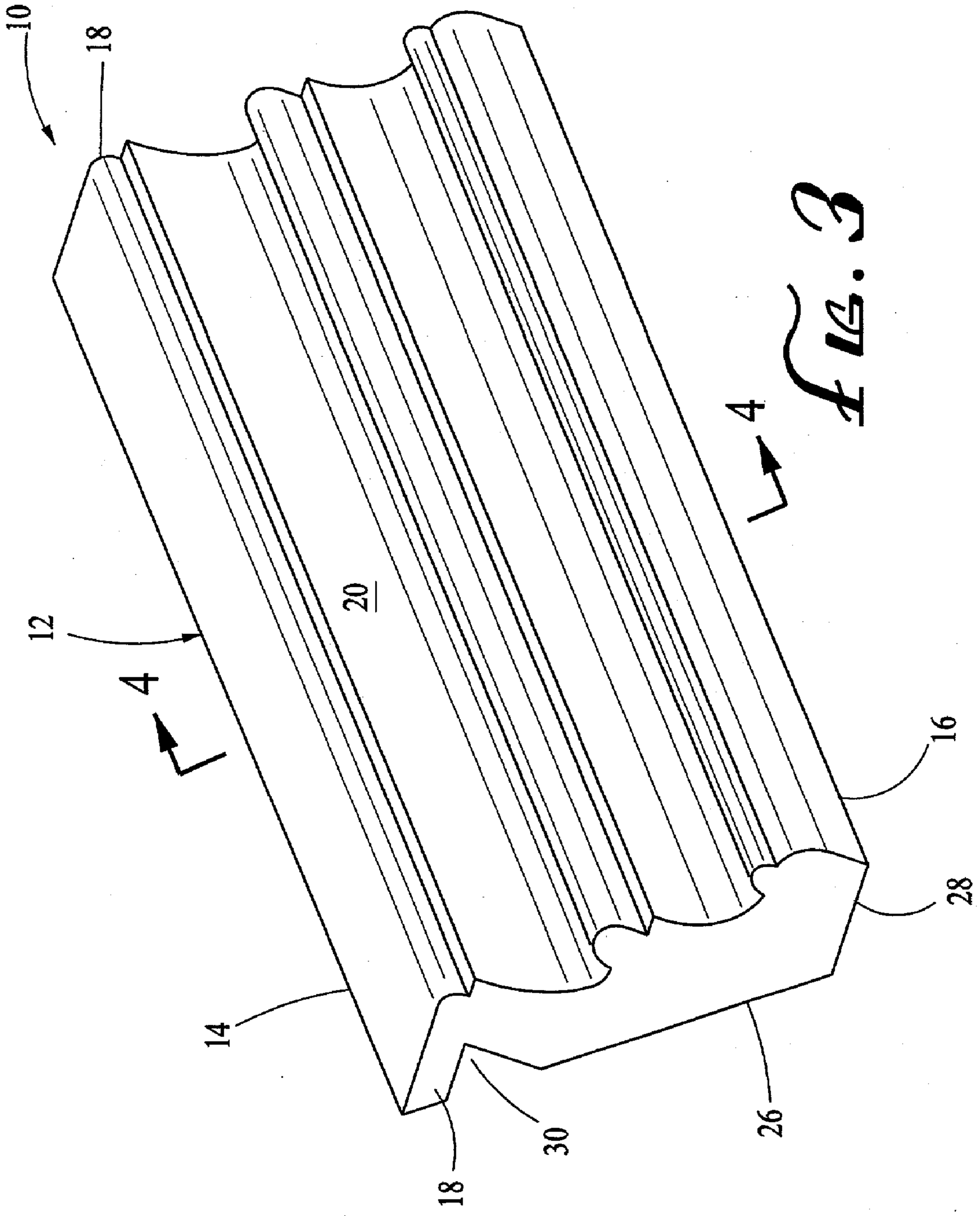

FIG. 3

FIG. 4A

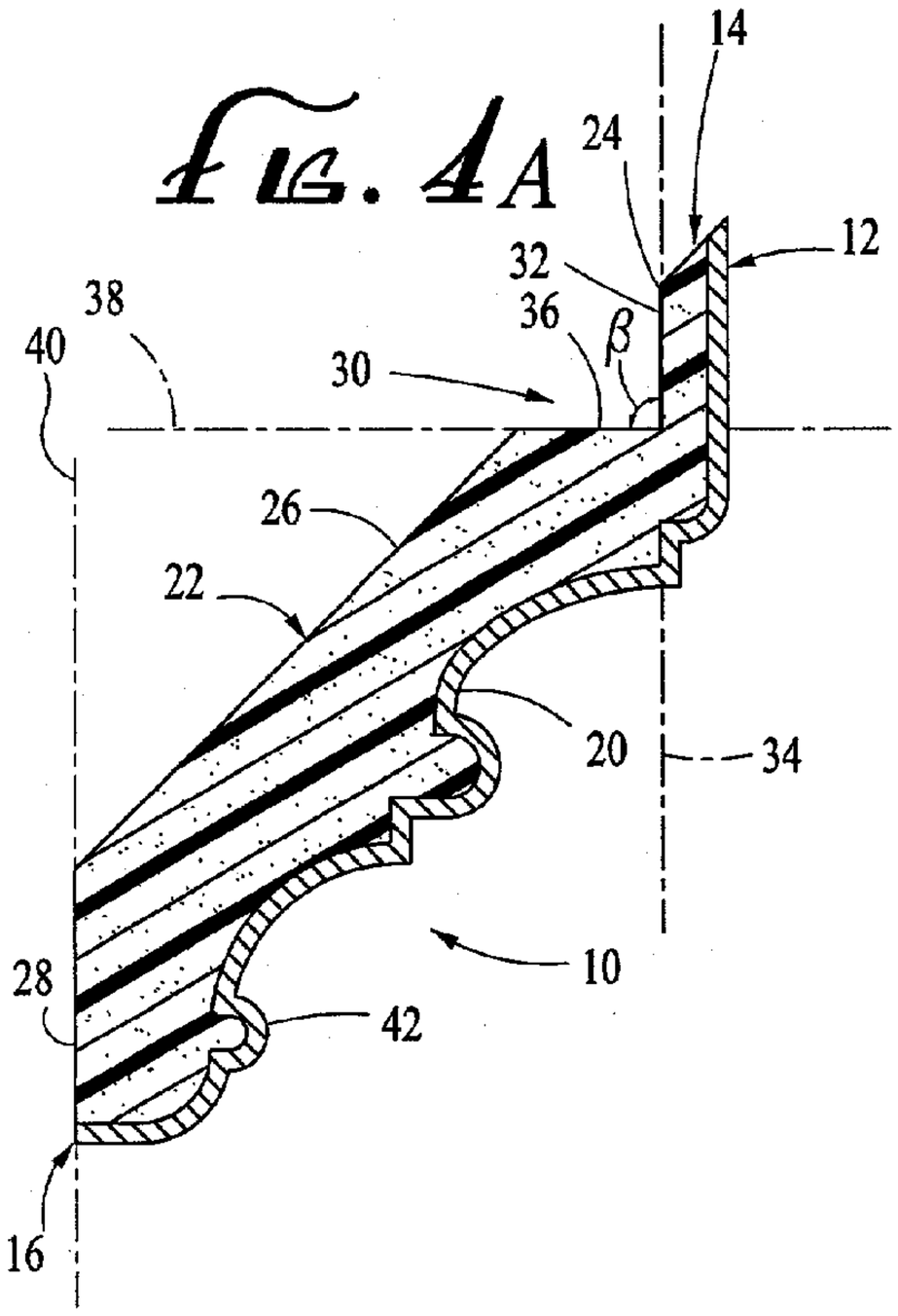

FIG. 4B

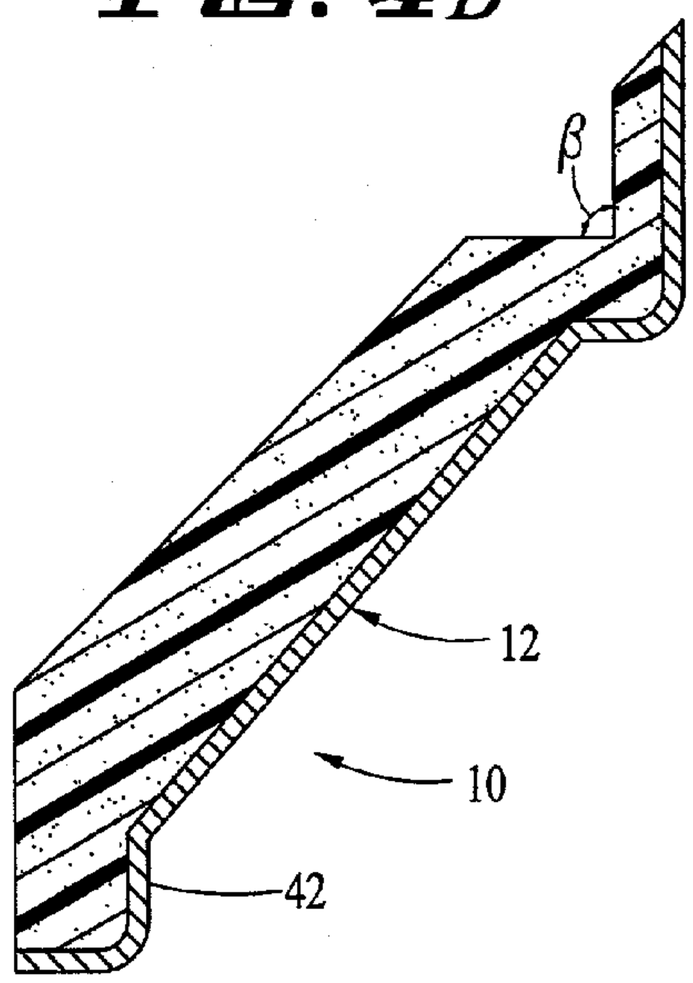

FIG. 4C

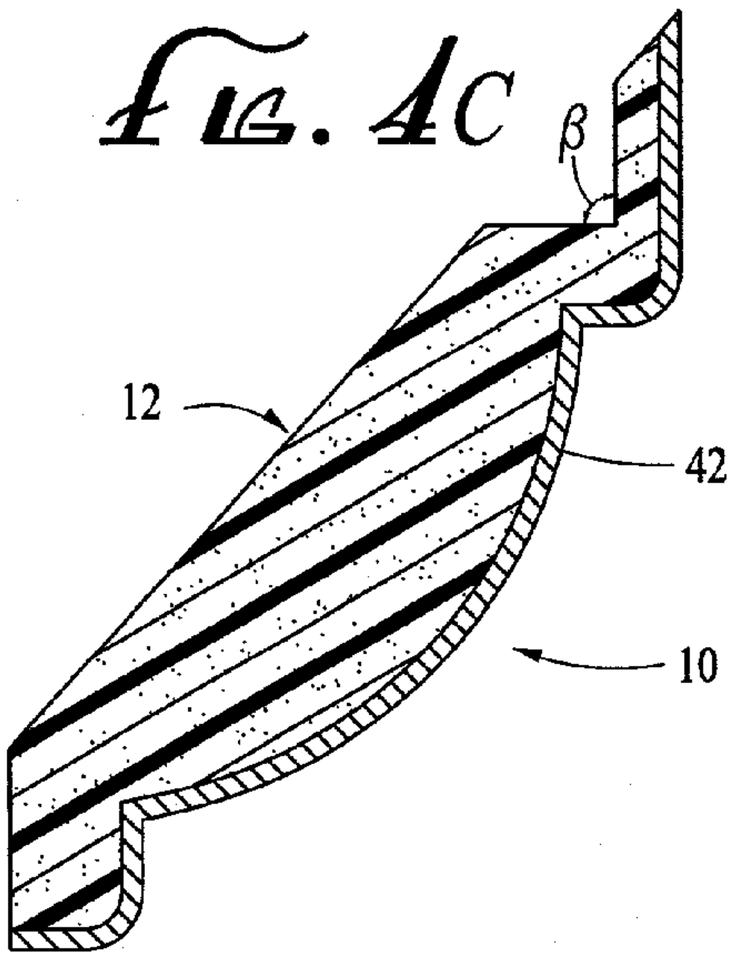

FIG. 4D

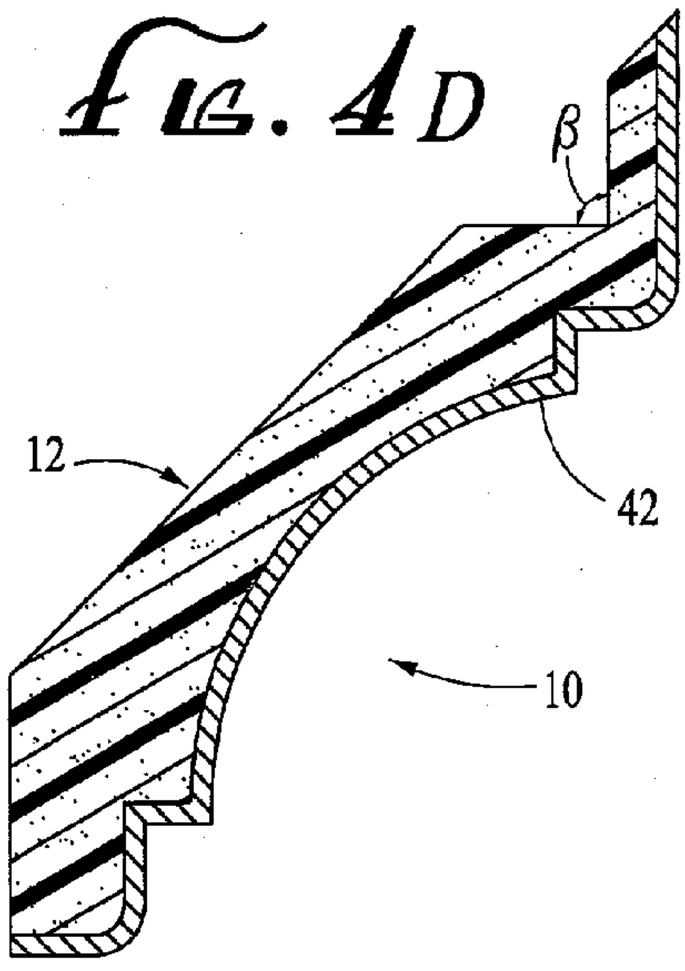

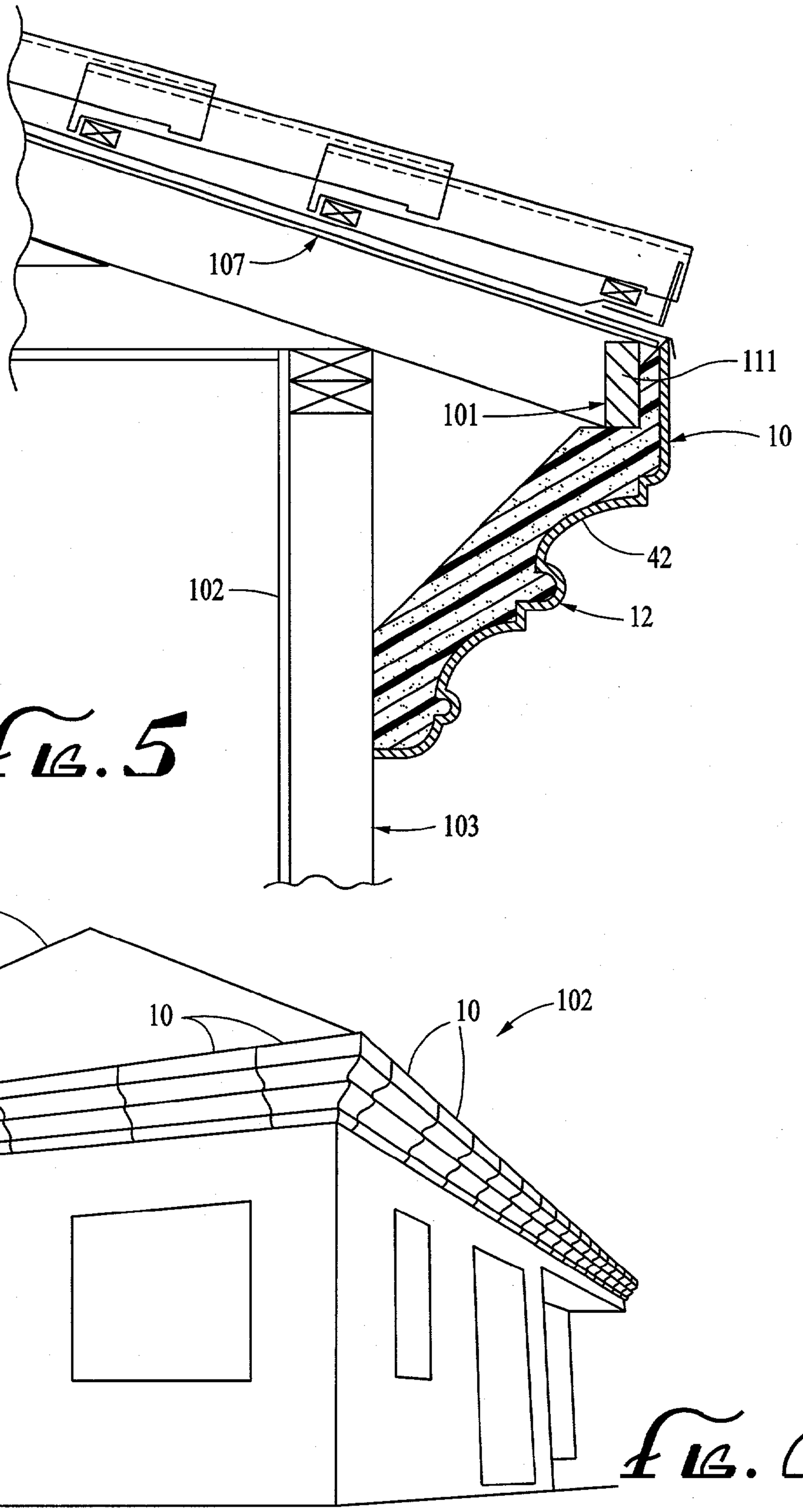

FIG. 5

FIG. 6

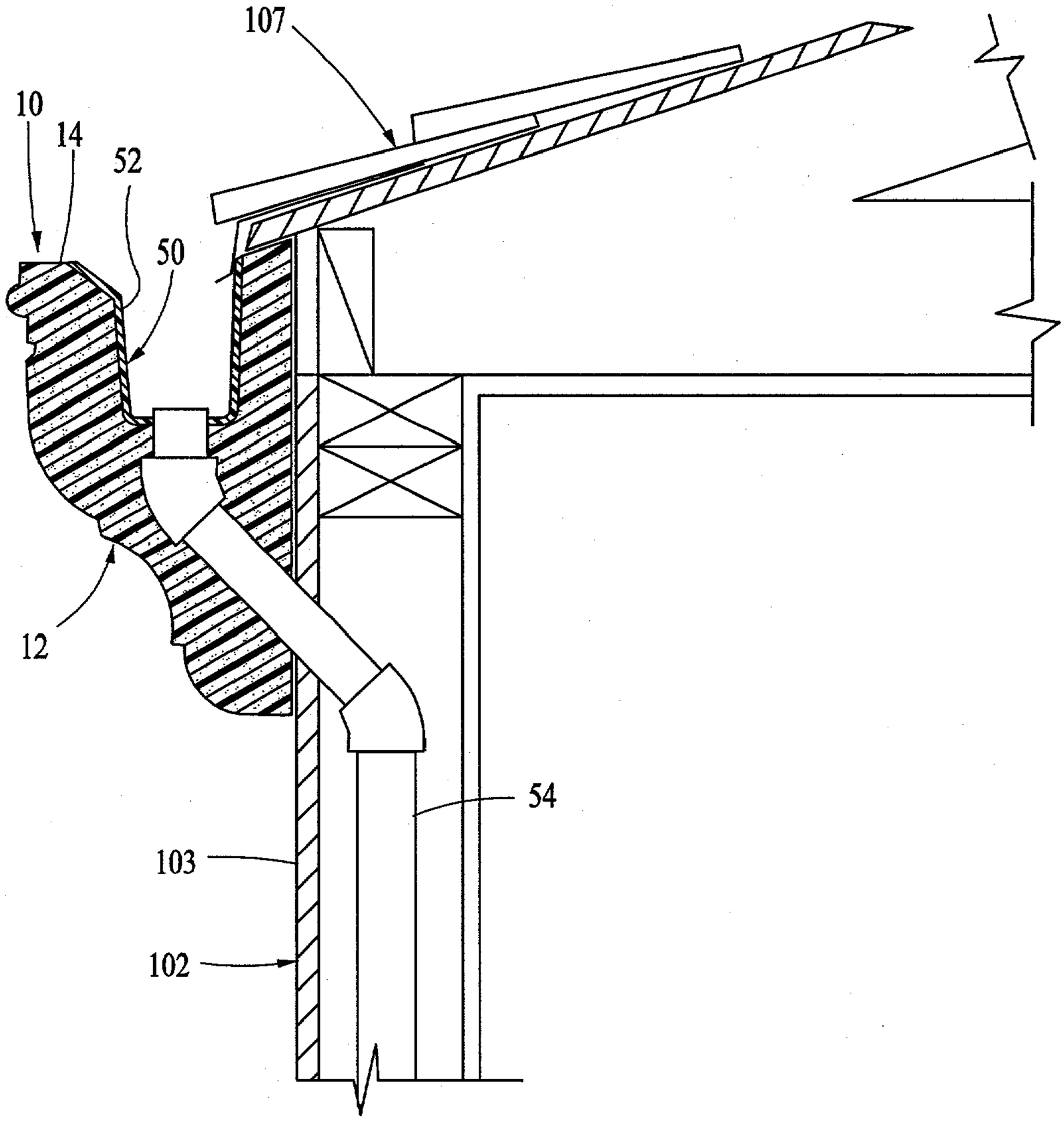

FIG. 7

EAVE TRIMMING ELEMENT

FIELD OF THE INVENTION

[0001] This invention relates generally to the construction of private building structures and, more specifically, to the construction of the eave portion of such structures.

BACKGROUND OF THE INVENTION

[0002] In the construction of houses, commercial buildings and other structures having roofs which extend out beyond the sides of the structure to form eaves, the underside of the eaves (see **FIG. 1**) must be properly trimmed for aesthetic purposes and to prevent unwanted dust, moisture and vermin from getting into the structure via the underside of the roof.

[0003] Traditionally, the finished trimming of the eaves requires the extensive construction and assembly of complex eave finishing structures which must be handmade from wood, plastic and/or foam. Such a prior art eave finishing structure is illustrated in **FIG. 2**. However, the construction and assembly of such finishing structures is arduous, time-consuming and expensive. Also, the finished weight of such finishing structure is considerable. Thus, the house or commercial building necessarily requires a heavy duty support framework.

[0004] Accordingly, there is a need for an eave trimming element and a method of using same to finish trim the eaves of a building which overcome these problems in the prior art.

SUMMARY OF THE INVENTION

[0005] The present invention satisfies this need. The invention is a method of trimming the eave of a structure. The method comprises the steps of (a) selecting a plurality of prefabricated eave trimming elements, each of the eave trimming elements comprising a generally trapezoid shaped panel having a top edge, a bottom edge, and a pair of opposed side edges, the panel also having a forward side and a rearward side, the rearward side having an upper portion proximate to the top edge, a central portion and a bottom portion proximate to the bottom edge, and (b) attaching the plurality of eave trimming elements end to end around the outer edge of the eave with the upper portion of the rearward side of the panel disposed over the eave outer edge angle and with the bottom portion of the rearward side of each panel disposed against a sidewall of the structure.

[0006] The invention is also an eave trimming method and a method for using same. The invention comprises a generally trapezoid-shaped panel having a top edge, a bottom edge and a pair of opposed side edges. The term "trapezoid-shaped" as used herein is meant to be construed broadly to denote any planar geometric shape having a pair of opposed parallel sides. Thus, "trapezoid-shaped" as used herein includes rectangles and squares.

[0007] The panel also has a forward side and a rearward side. The rearward side has an upper portion proximate to the top edge, a central portion and a bottom portion proximate to the bottom edge. The upper portion of the rearward side of the panel comprises a notch having a generally vertical surface disposed in a notched vertical plane and a generally horizontal surface disposed in a notch horizontal plane. The bottom portion of the rearward side is disposed in a bottom portion vertical plane which is substantially parallel to the notch vertical surface plane.

[0008] In a typical embodiment, each eave trimming element is rectangle shaped having a length between about 24" and about 96" and a width between about 6" and about 48".

[0009] The eave trimming element can be made from an extrudable material, such as from a closed cell foam, but an expanded polystyrene is preferred.

[0010] To protect the eave trimming element from the atmosphere, the element can be coated with a sealing material, such as a polymer modified cement. The polymer modified cement can include an aggregate, if desired, to match the look of the remainder of the building, or the eave trimming element can then further be covered with a stucco.

DRAWINGS

[0011] These and other features, aspects and advantages of the present invention will become better understood from the following description, appended claims, and accompanying drawings where:

[0012] **FIG. 1** is a cross-sectional side detail view of the eave portion of a structure to which the invention is applicable;

[0013] **FIG. 2** is a cross-sectional side detail view of an eave trimmed by a method of the prior art;

[0014] **FIG. 3** is an isometric view of an eave trimming element having features of the prior art;

[0015] **FIG. 4A** is a cross-sectional side view of the eave trimming element illustrated in **FIG. 3**;

[0016] **FIG. 4B** is a cross-sectional side view of a second embodiment of an eave trimming element having features of the invention;

[0017] **FIG. 4C** is a cross-sectional side view of a third embodiment of an eave trimming element having features of the invention;

[0018] **FIG. 4D** is a cross-sectional side view of a fourth embodiment of an eave trimming element having features of the invention;

[0019] **FIG. 5** is a cross-sectional side detail view of an eave, such as illustrated in **FIG. 1**, trimmed by a method having features of the invention;

[0020] **FIG. 6** is an isometric view of a structure wherein the eaves of the structure have been trimmed by a method having features of the invention; and

[0021] **FIG. 7** is a cross-sectional side view of an eave trimmed by an alternative method having features of the invention.

DESCRIPTION OF THE INVENTION

[0022] The following discussion describes in detail one embodiment of the invention and several variations of that embodiment. This discussion should not be construed, however, as limiting the invention to those particular embodiments. Practitioners skilled in the art will recognize numerous other embodiments as well.

[0023] The invention is a method of trimming the eave of a structure using a plurality of eave trimming elements **10**.

[0024] The invention addresses the problem of how to finish trimming the eave portion **101** of a residential or commercial building **102**. **FIG. 1** illustrates the eave **101** of a typical building **102**. The building **102** comprises a vertical wall **103** having an outer side **104** and a inner side **105**, a ceiling **106** and a roof **107**. The roof **107** is supported on rafters **115**. In the building **102** illustrated in **FIG. 1**, the upper portion **108** of the roof **107** has been covered with clay tiles **109**. As can be seen in **FIG. 1**, the underside of the forward edge **110** of the roof **107**, which is termed herein the eave **101** of the building **102**, comprises an eave face board **111** having a forward surface **112** and a lower surface **113**. The intersection of the forward surface **112** and the lower surface **113** defines an eave outer edge **114**. Disposed at the apex of the eave outer edge **114** is an eave outer edge angle α. The eave face board **111** is typically a 2×4 and the eave outer edge angle α is typically 270°.

[0025] The eave **101** in **FIG. 1** is open and unfinished. Such open and unfinished eave **101** is unsightly and also provides access to the underside of the roof **107** to moisture, dust and vermin.

[0026] **FIG. 2** illustrates the most common prior art method of finish trimming eaves **101** such as illustrated in **FIG. 1**. In **FIG. 2**, the eave **101** has been enclosed with a complex, hand-crafted eave finishing structure **200**. The eave finishing structure **200** typically comprises a plurality of box-like frameworks **210** which compartmentalize the space beneath the eave **101**. The plurality of box-like frameworks **210** include a pair of interior perimeter 2×4's **212** which are attached to the vertical walls **103** of the building **102**. The pair of interior perimeter 2×4's **212** run beneath the entire length of each eave **101**. Cross boards **214**, spaced apart every foot or two, are disposed beneath the pair of interior perimeter 2×4's **212** and the eave face board **111**. In a typical 2,000 square foot building, the additional lumber required by the use of the interior perimeter 2×4's **212** and by the cross boards **214** is about 500 board feet.

[0027] Once the box-like frameworks **210** are assembled, the spaces beneath the box-like frameworks **210** are filled in with expanded wire, lath and plaster **216**. The weight of the expanded wire, lath and plaster **216** is about 9 pounds per square foot. Finally, finishing pieces **218**, such as finishing pieces **218** made from a foam material, are disposed to bridge the vertical wall **103** of the building **102** with the underside of the expanded wire, lath and plaster **216**. As can be seen, this eave trimming structure **200** is arduous, time-consuming and expensive to construct. It also is quite heavy, and therefore requires an overall strengthened framing design for the entire building **102**.

[0028] In the method of the invention, a plurality of prefabricated eave trimming elements **10** are disposed end-to-end up under the eaves **101** of a building **102** to wholly enclose and finish trimming the eaves **101** of the building **102** (see **FIG. 7**).

[0029] A preferred eave trimming element **10** of the invention is illustrated in FIGS. **3-7**. The eave trimming element **10** comprises a generally trapezoid-shaped panel **12** having a top edge **14**, a bottom edge **16** and a pair of opposed side edges **18**. The panel **12** also has a forward side **20** and a rearward side **22**. The rearward side **22** has an upper portion **24** proximate to the top edge **14**, a central portion **26** and a bottom portion **28** proximate to the bottom edge **16**. As illustrated in **FIG. 3**, the panel **12** is typically rectangle-shaped, having a length, a width and a thickness. The length of the panel **12** is typically between about 24" and about 96" and the width of the panel **12** is typically between 6" and about 48".

[0030] The upper portion **24** of the rearward side **22** of the panel **12** comprises a notch **30**. In the embodiments illustrated in the drawings, the notch **30** has a generally vertical surface **32** disposed in a notch vertical plane **34** and a generally horizontal surface **36** disposed in a notch horizontal plane **38**. Thus, the notch angle β, defined by the intersection of the surface **32** and the surface **36**, is about 90°. The notch angle β, however, can be larger or smaller, so long as it approximately matches the eave outer edge angle α of the eave **101** to which the eave element **10** is to be applied.

[0031] The bottom portion **28** of the rearward side **22** of the panel **12** is disposed in a bottom portion vertical plane **40** which is typically substantially parallel to the notch vertical surface plane **34**.

[0032] The panel **12** can be conveniently made from a lightweight material in an extrusion process. In one embodiment, the panel **12** is made from an extruded closed cell foam. However, a preferred material for the panel **12** is an expanded polystyrene which is considerably less expensive than extruded materials. Extruded polystyrene is light and very inexpensive, but it is very durable. It is estimated that the life of extruded polystyrene is on the order of 500 years.

[0033] The panel **12** is typically coated with a sealing material **42**. Such sealing material **42** can be a polymer modified cement, such as a polymer modified cement marketed under the trade name Foam Magic™ by Western State Wholesale Company of Ontario, Calif. The polymer modified cement can include an aggregate, if desired, to match the look of the remainder of the building **102**, or the eave trimming element **10** can then further be covered with a stucco. The polymer-modified cement can be otherwise modified in a wide variety of ways to give it different colors and textures. Such polymer modified cement can not only be used to seal the surface of the panel **12**, but can also be used as an adhesive to adhere the panel **12** to the building **102** and to adjoining panels **12**.

[0034] In a typical embodiment, the generally vertical surface **32** of the notch **30** has a length x of between about 3" and about 6" and the generally horizontal surface **36** has a length y between about 3" and about 6".

[0035] The bottom portion **28** of the rearward side **32** is typically flat and has a length z of between about 3" and about 6".

[0036] **FIG. 4A** is a cross-sectional side view of the panel **12** illustrated in **FIG. 3**. **FIGS. 4B, 4C** and **4D** are cross-sectional side views of alternative embodiments having different cross-sections. Many other cross-sections can also be created by those of skill in the art.

[0037] **FIG. 5** illustrates how the panel **12** illustrated in **FIGS. 3 and 4A** can be used to enclose the eave **101** of a building **102**, such as illustrated in **FIG. 1**.

[0038] As can be seen in **FIG. 5**, the notch **30** in the upper portion **24** of the rearward side **22** of the panel **12** is disposed against the forward surface **112** and the lower surface **113** of the eave face board **111**, thus covering the eave outer edge angle α. The bottom portion **28** of the rearward side **22** of the panel **12** is disposed flat against the outer side **104** of the vertical wall **103** of the building **102**.

[0039] The panel **12** can be adhered to the building **102** by adhesives or by mechanical means. Typically, the panel **12** is attached to the building **102** using a polymer modified cement coating **42** as an adhesive in combination with mechanical means, such as washer-enhanced nails or screws (not shown).

[0040] **FIG. 6** illustrates how a plurality of panels **12** can be disposed end-to-end around the eave **101** of a building **102** to enclose the underside of the roof **107** of the building **102** and to conveniently and efficiently finish the eaves **101** of the building **102**. As noted above, each panel **12** can be adhesively adhered to abutting panels **12** using an external coating **42** of polymer-modified cement.

[0041] **FIG. 7** illustrates an alternative embodiment of the invention wherein the eave trimming element **10** comprises a gutter trough **50**. The trough **50** is disposed in the top edge **14** of the panel **12** so as to be able to catch water run-off from the roof **107**. The trough **50** is lined with an elastomeric material **52** to provide a continuous, leak-free, U-shaped surface. As illustrated in **FIG. 7**, an eave trimming element **10** having a gutter trough **50** can be used to provide a building **102** with hidden down spouts **54**, the down spouts **54** being disposed within the vertical wall **103** of the building **102**.

[0042] The invention provides an inexpensive, lightweight and easy to construct method of finish trimming the eaves of a structure. The resulting finished eaves are durable, fire-resistant and inexpensive to construct. Also, for a typical house or commercial building the weight of an eave finished by the inventive method is about 20 times lighter than an eave finished by prior art techniques. The decreased weight of the resulting finished eaves can make the building considerably less prone to damage by earthquakes, high winds or other excessive stresses. Thus, the cost of the overall building can be additionally reduced by the non-necessity of an unduly strengthened framing structure.

[0043] Having thus described the invention, it should be apparent that numerous structural modifications and adaptations may be resorted to without departing from the scope and fair meaning of the instant invention as set forth hereinabove and as described hereinbelow by the claims.

What is claimed is:

1. A method of finishing the eaves of a building having sidewalls and a roof, the roof having eaves which extend outwardly from the sidewalls, the eaves comprising an outer edge defining an eave outer edge angle, the method comprising:

(a) selecting a plurality of prefabricated eave trimming elements, each of the eave trimming elements comprising a generally trapezoid shaped panel having a top edge, a bottom edge, and a pair of opposed side edges, the panel also having a forward side and a rearward side, the rearward side having an upper portion proximate to the top edge, a central portion and a bottom portion proximate to the bottom edge; and

(b) attaching the plurality of eave trimming elements end to end around the outer edge of the eave with the upper portion of the rearward side of the panel disposed over the eave outer edge angle and with the bottom portion of the rearward side of each panel disposed against a sidewall of the building.

2. The method of claim 1 wherein the panel is made from a closed cell foam.

3. The method of claim 1 wherein the panel is made from an extruded material.

4. The method of claim 1 wherein the panel is made from an expanded polystyrene.

5. The method of claim 1 wherein the panel is coated with a coating material.

6. The method of claim 5 wherein the coating material comprises a polymer modified cement.

7. An eave trimming element comprising a generally trapezoid shaped panel having a top edge, a bottom edge and a pair of opposed side edges, the panel also having a forward side and a rearward side, the rearward side having an upper portion proximate to the top edge, a central portion and a bottom portion proximate to the bottom edge,

wherein the upper portion of the rearward side of the panel comprises a notch having a generally vertical surface disposed in a notch vertical surface plane and a generally horizontal surface disposed in a notch horizontal surface plane, and

wherein the bottom portion of the rearward side is disposed in a bottom portion vertical plane which is substantially parallel to the notch vertical surface plane.

8. The method of claim 7 wherein the panel is generally rectangle shaped.

9. The eave trimming element of claim 7 wherein the panel has a length, a width and a thickness, and wherein the width of the panel is between about 6" and about 48".

10. The eave trimming element of claim 7 wherein the panel is made from an extruded material.

11. The eave trimming element of claim 7 wherein the panel is made from an expanded polystyrene.

12. The eave trimming element of claim 7 wherein the panel is coated with a coating material.

13. The eave trimming element of claim 12 wherein the coating material comprises a polymer modified cement.

14. The eave trimming element of claim 7 wherein the generally vertical surface of the notch and the generally horizontal surface of the notch are both between about 3" and about 6" in length.

15. The method of claim 1 wherein each of the eave trimming elements comprises a gutter trough.

16. A method of finishing the eaves of a building having sidewalls and a roof, the roof having eaves which extend outwardly from the sidewalls, the eaves comprising an outer edge defining an eave outer edge angle, the method comprising:

(a) selecting a plurality of eave trimming elements, each of the eave trimming elements comprising a generally rectangle shaped panel having a top edge, a bottom edge, and a pair of opposed side edges, the panel also having a forward side and a rearward side, the rearward

side having an upper portion proximate to the top edge, a central portion and a bottom portion proximate to the bottom edge,

wherein the upper portion of the rearward side of the panel comprises a notch having a first surface and a second surface, the first surface being disposed with respect to the second surface at a notch angle, the notch angle being substantially the same as the eave outer edge angle, and

wherein the bottom portion of the rearward side is disposed in a bottom portion vertical plane; and

(b) attaching the plurality of eave trimming elements end to end around the outer edge of the eave with the notch on the upper portion of the rearward side of the panel disposed over the eave outer edge angle and with the bottom portion of the rearward side of each panel disposed against a sidewall of the building.

17. The method of claim 16 wherein the eave outer edge angle is about 270° and the notch angle is about 90°.

18. The eave trimming element of claim 16 wherein the panel is coated with a coating material.

19. An eave trimming element comprising a generally trapezoid shaped panel having a top edge, a bottom edge and a pair of opposed side edges, the panel also having a forward side and a rearward side, the rearward side having an upper portion proximate to the top edge, a central portion and a bottom portion proximate to the bottom edge,

wherein the top edge of the panel comprises a gutter trough.

20. A building having vertical walls and a roof, the roof overhanging the vertical walls to define eaves, wherein the eaves are enclosed by a plurality of eave trimming elements disposed end-to-end, each eave trimming element comprising a generally trapezoid shaped panel having a top edge, a bottom edge and a pair of opposed side edges, the panel also having a forward side and a rearward side, the rearward side having an upper portion proximate to the top edge, a central portion and a bottom portion proximate to the bottom edge.

* * * * *