US 20030190837A1

(19) **United States**

(12) **Patent Application Publication**

(10) **Pub. No.: US 2003/0190837 A1**

(43) **Pub. Date: Oct. 9, 2003**

Wu

(54) **BATTERY HOLDER HAVING MEANS FOR SECURELY RETAINING BATTERY IN POSITION**

(76) Inventor: **Jerry Wu**, Tu-Chen (TW)

Correspondence Address:
WEI TE CHUNG
FOXCONN INTERNATIONAL, INC.
1650 MEMOREX DRIVE
SANTA CLARA, CA 95050 (US)

(21) Appl. No.: **10/116,293**

(22) Filed: **Apr. 3, 2002**

Publication Classification

(51) **Int. Cl.**[7] **H01R 3/00**

(52) **U.S. Cl.** **439/500**

(57) **ABSTRACT**

A battery holder (**1**) comprises an insulative housing (**10**) defining a receiving space (**15**) for receiving a battery (**40**) and a pair of negative and positive conductive contacts (**20, 60**) fastened to opposite ends of the housing. Each of the negative and positive conductive contacts forms a base section (**22, 62**), a spring arm (**26, 63**) extending from one end of the base section for electrically connecting with a corresponding negative or positive terminal of the battery, and a soldering tail (**25, 66**) extending from another end of the base section for soldering to a circuit board. Furthermore, one of the first and second conductive contacts forms a pair of clip members (**64**) extending from opposite sides of the base section for conductively abutting against an outer surface (**45**) of the battery for preventing the battery from moving or offsetting under variation situations.

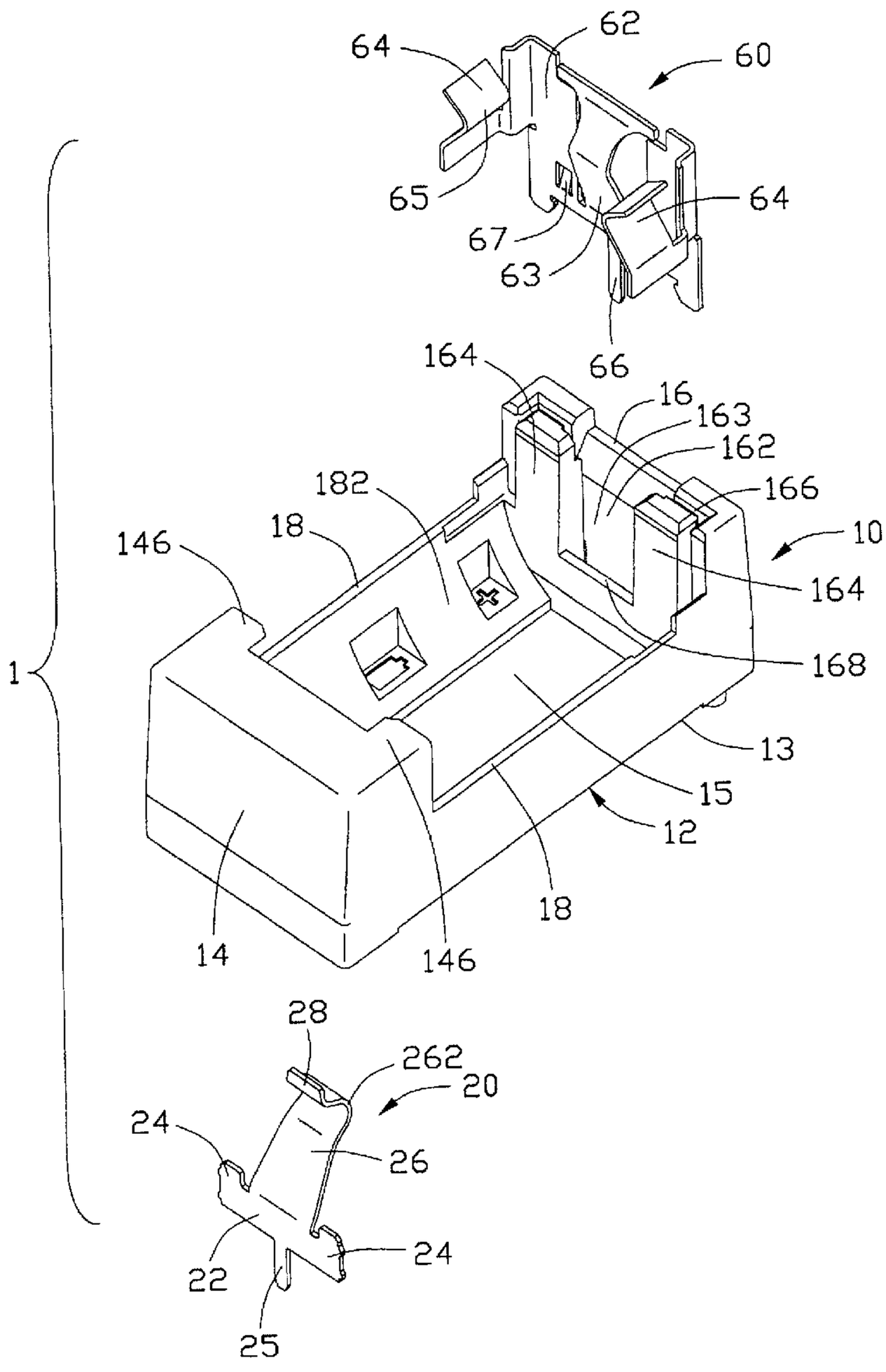

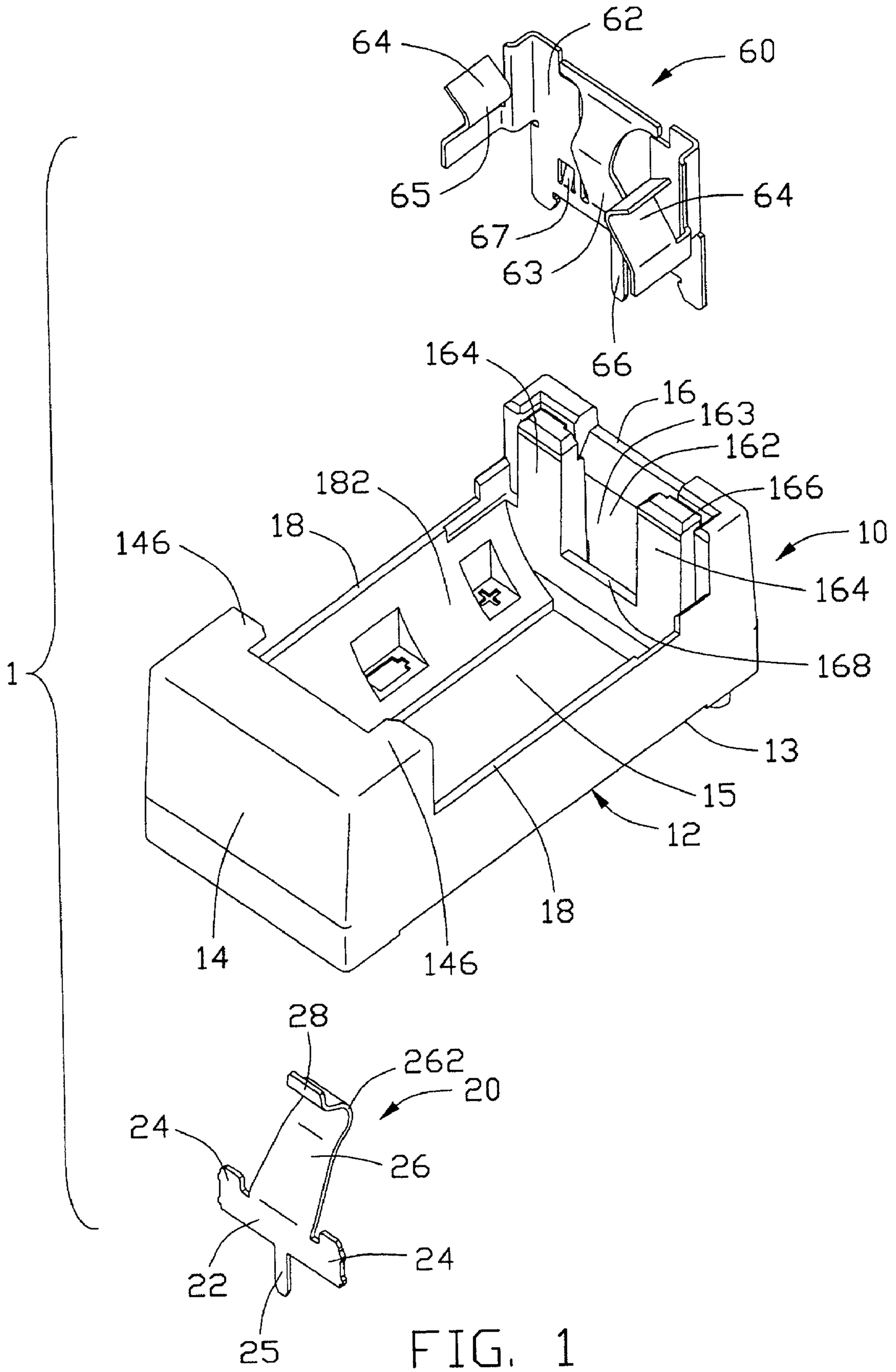
62
64
60
65
64
67
63
66
164
16
163
162
182
166
18
10
146
164
168
13
15
12
18
14
146
1
28
262
20
24
26
24
22
25

FIG. 1

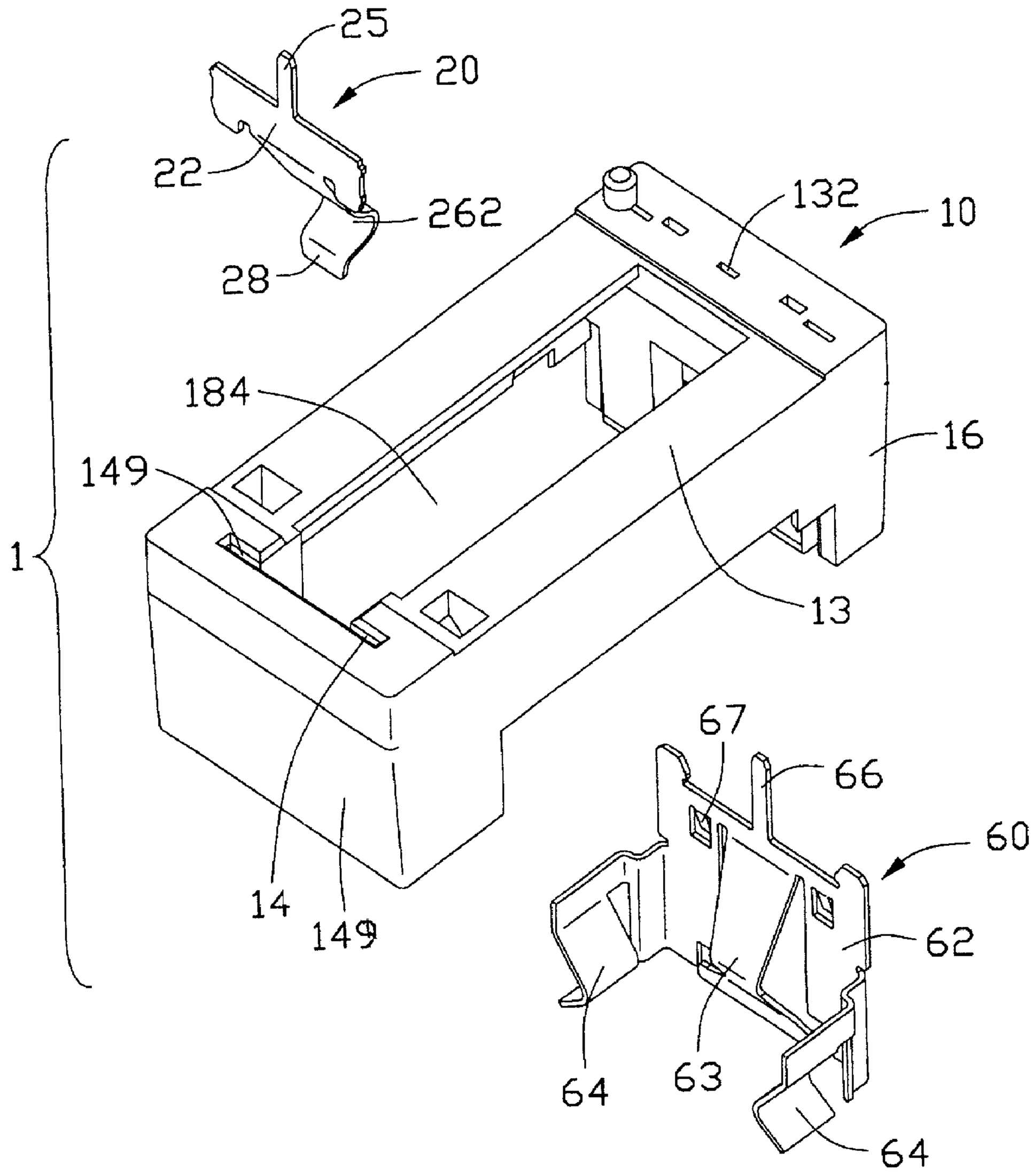

FIG. 2

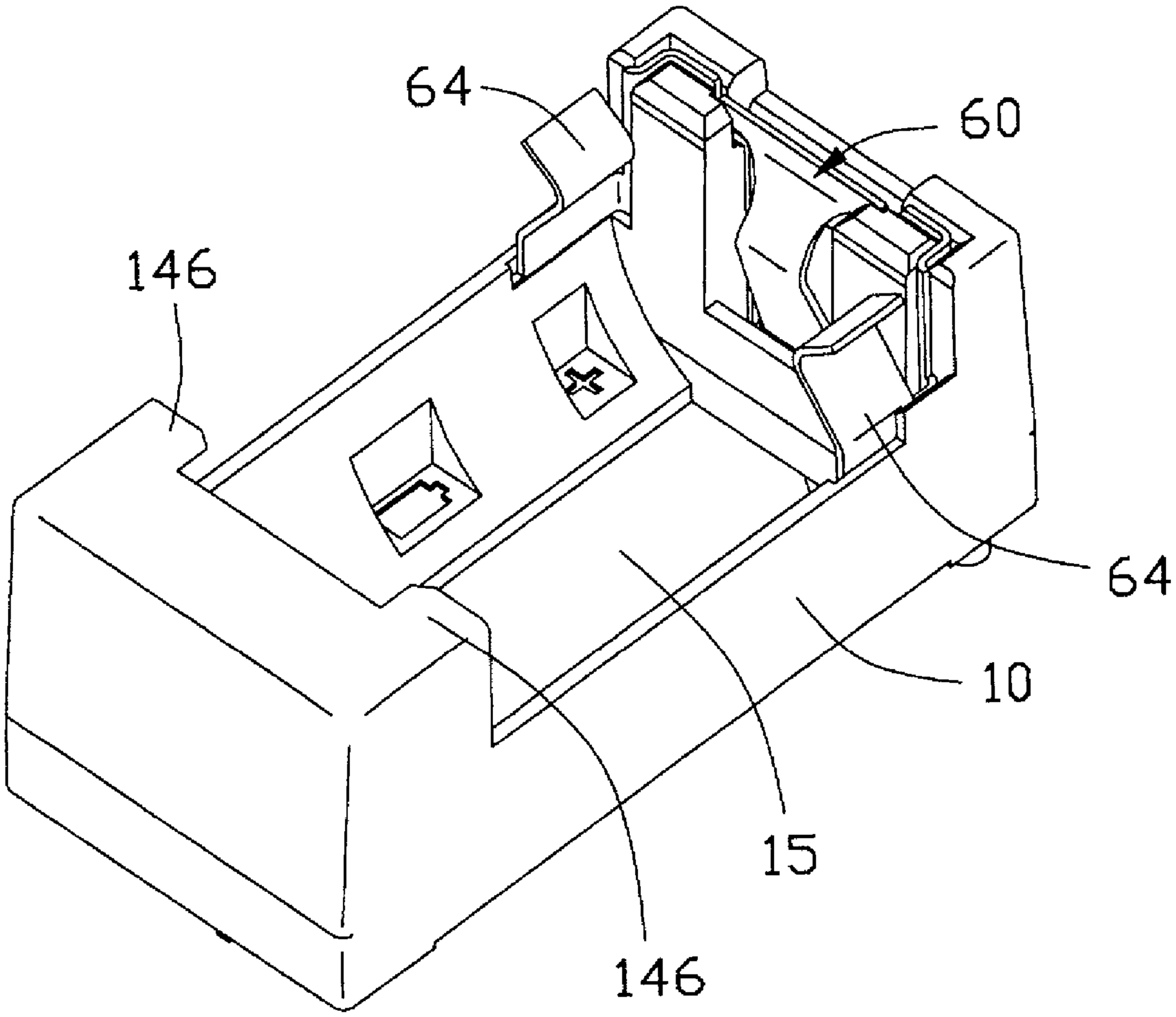

FIG. 3

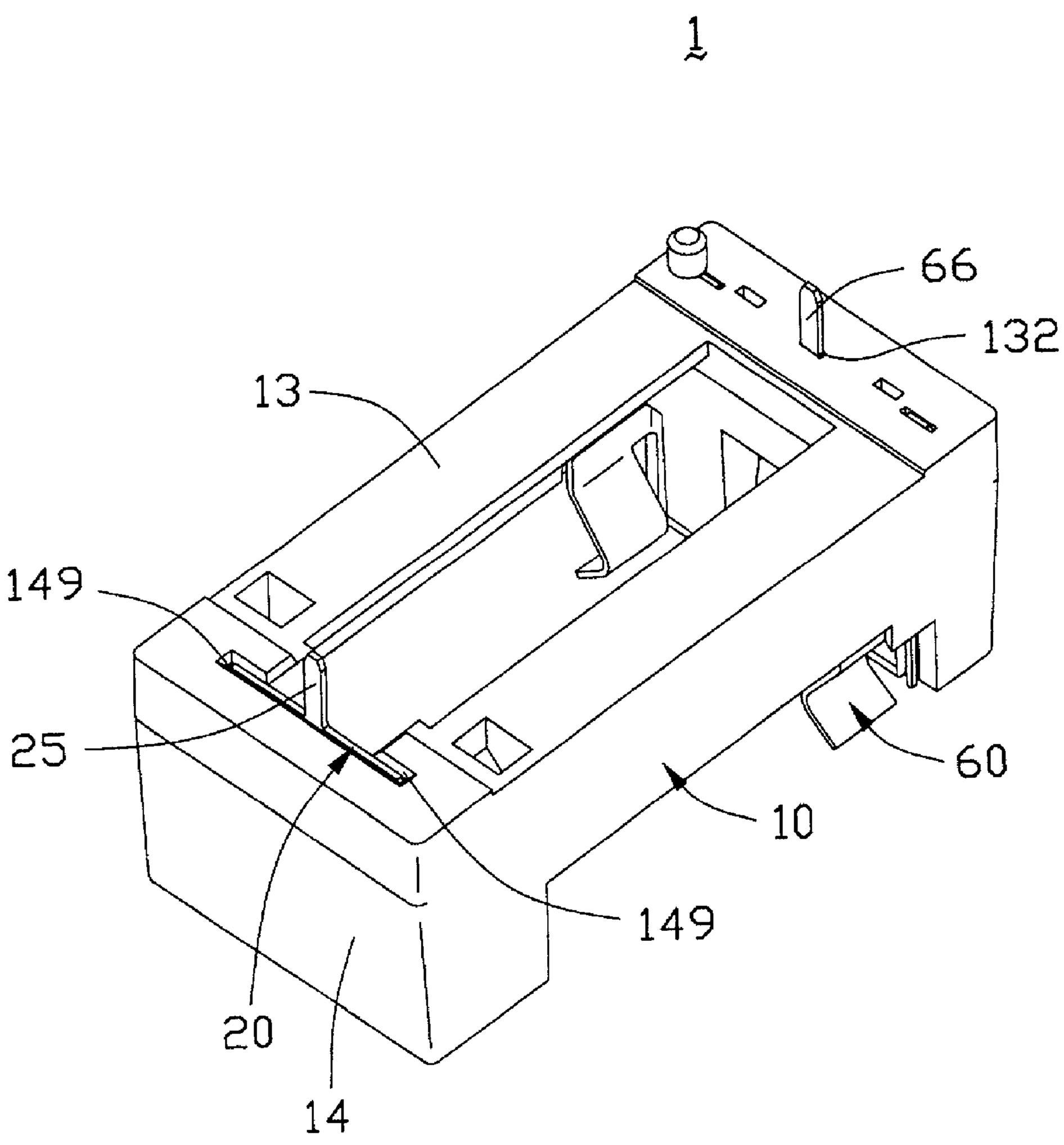

FIG. 4

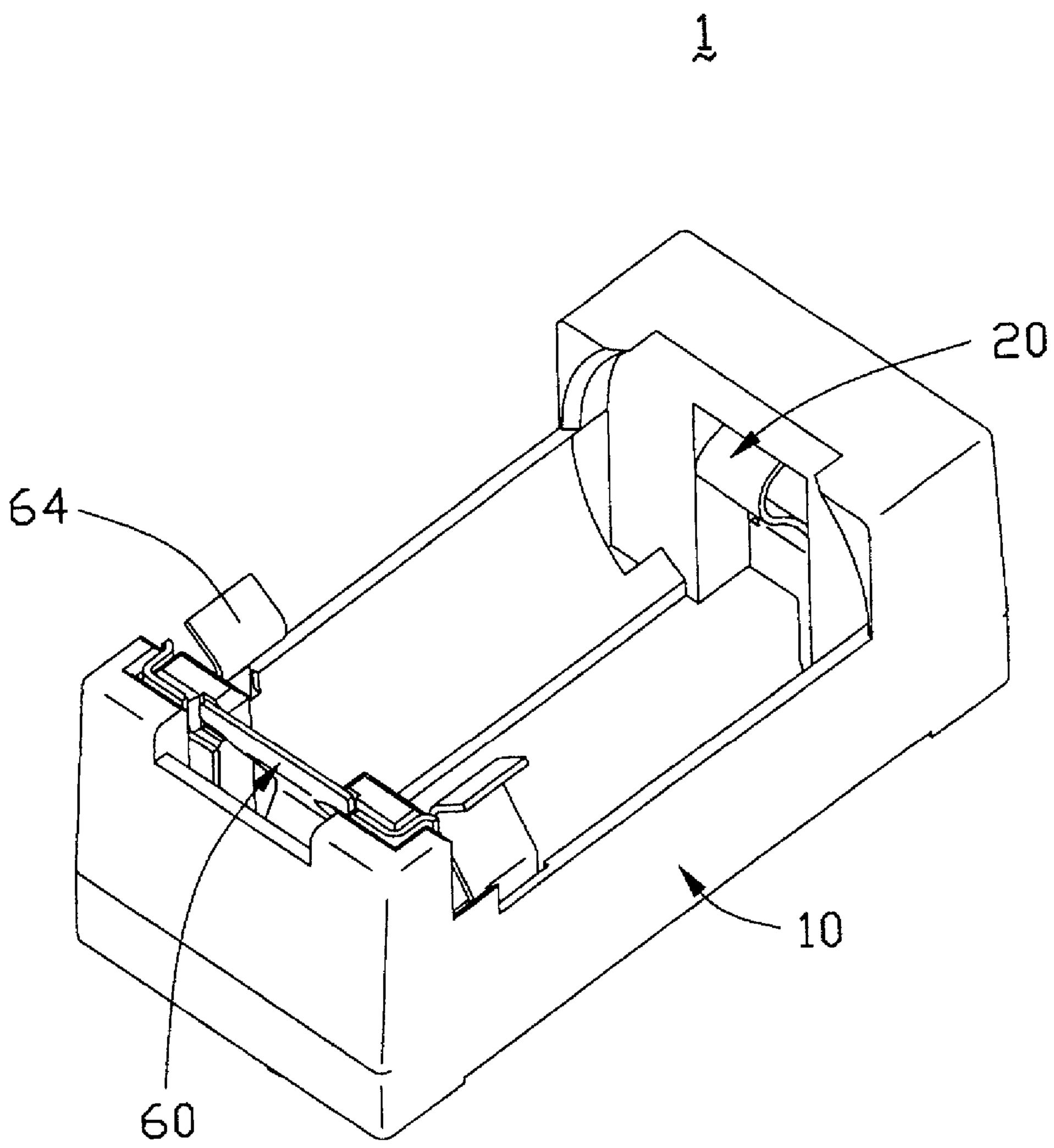

FIG. 5

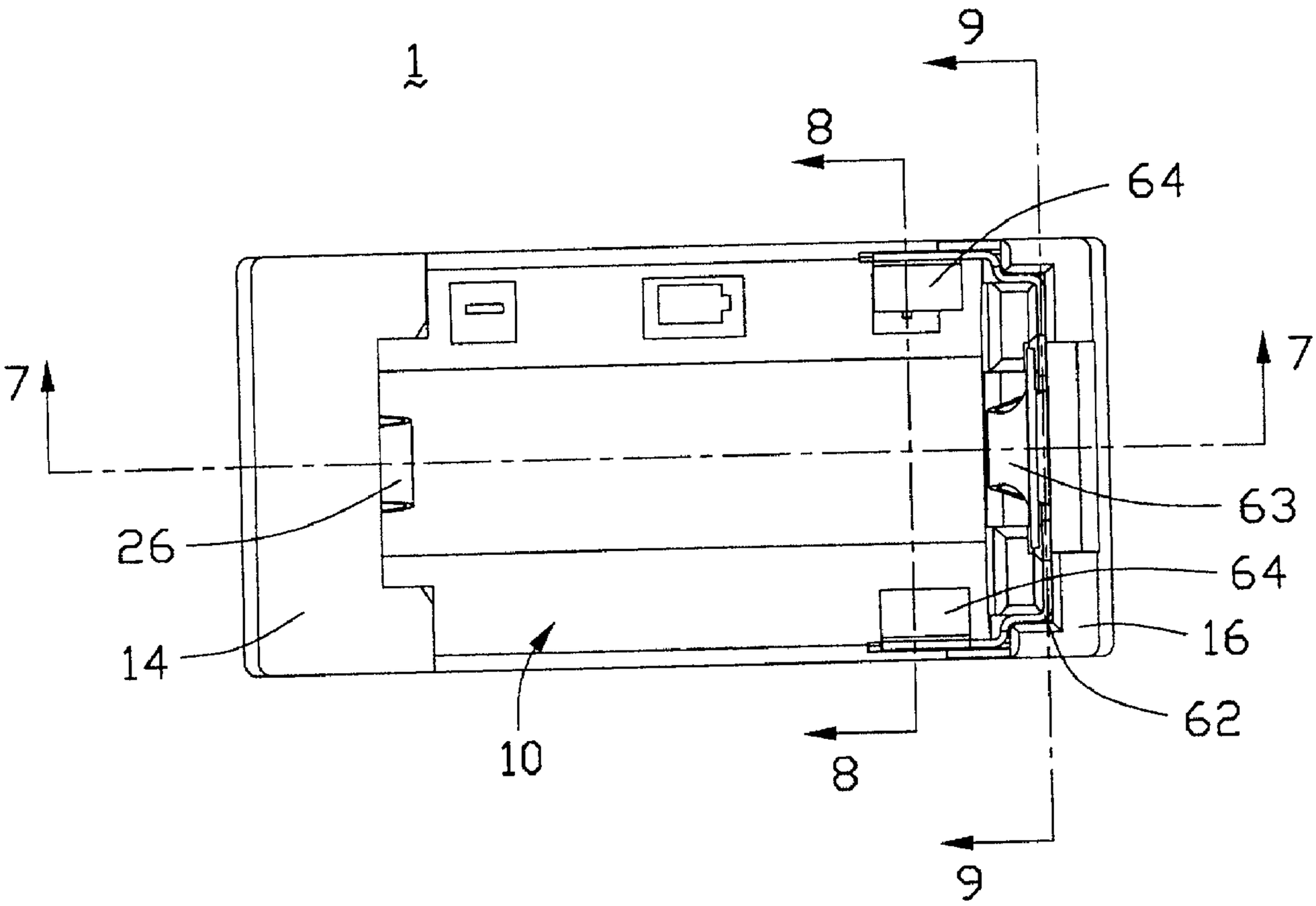
1
9
8
64
7
7
26
14
10
8
9
63
64
16
62

FIG. 6

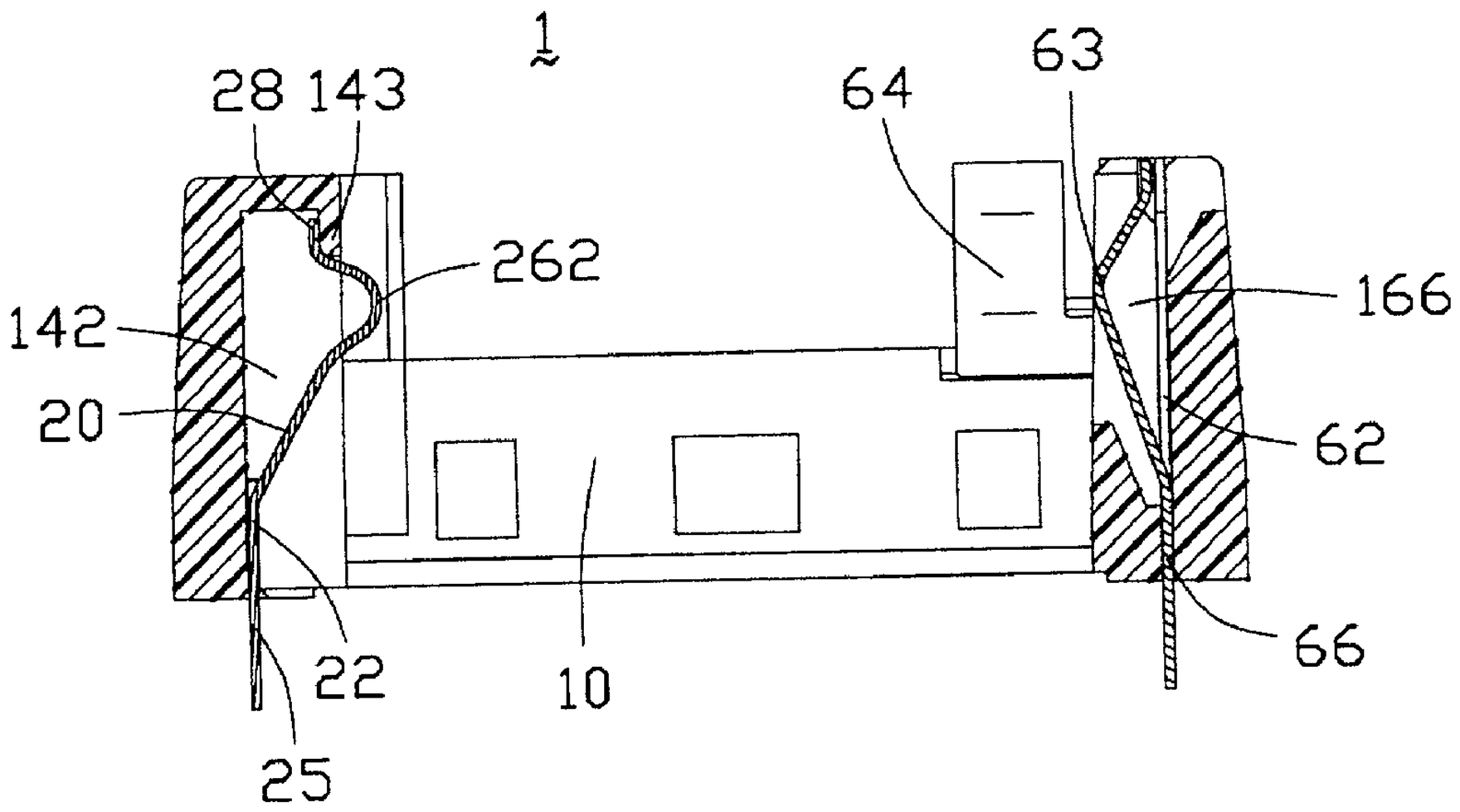
1
28
143
64
63
262
166
142
20
62
66
22
10
25

FIG. 7

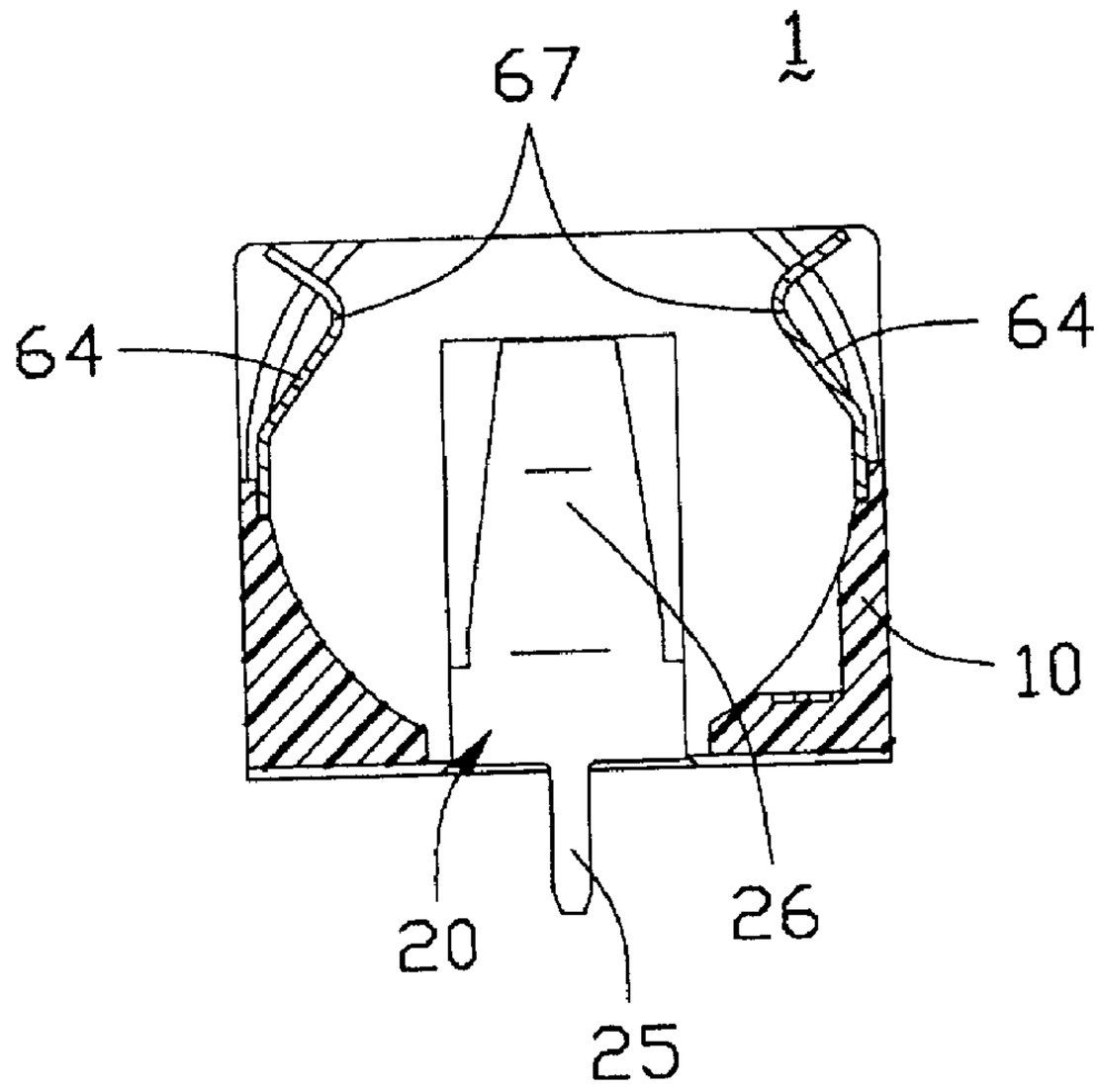

FIG. 8

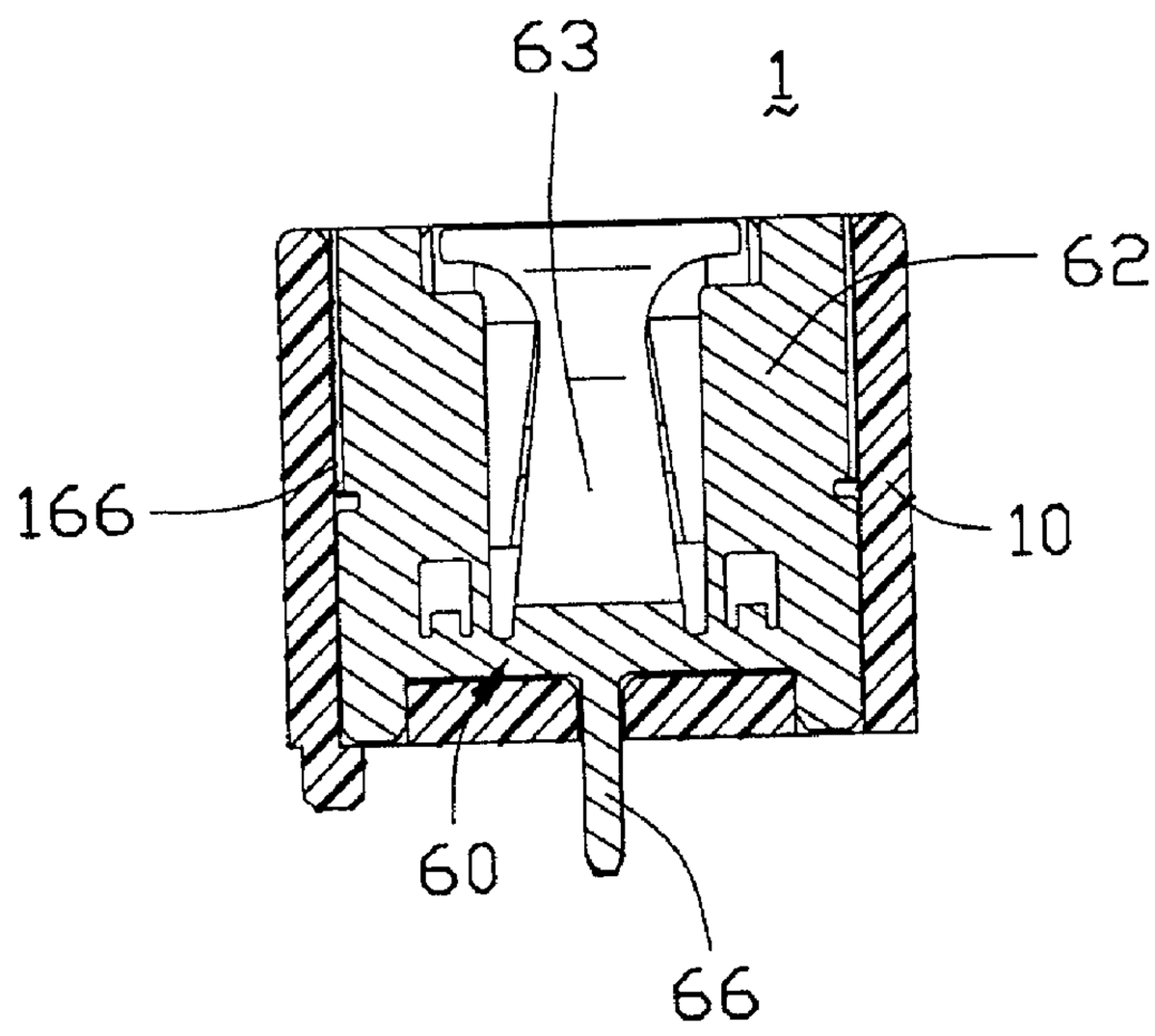

FIG. 9

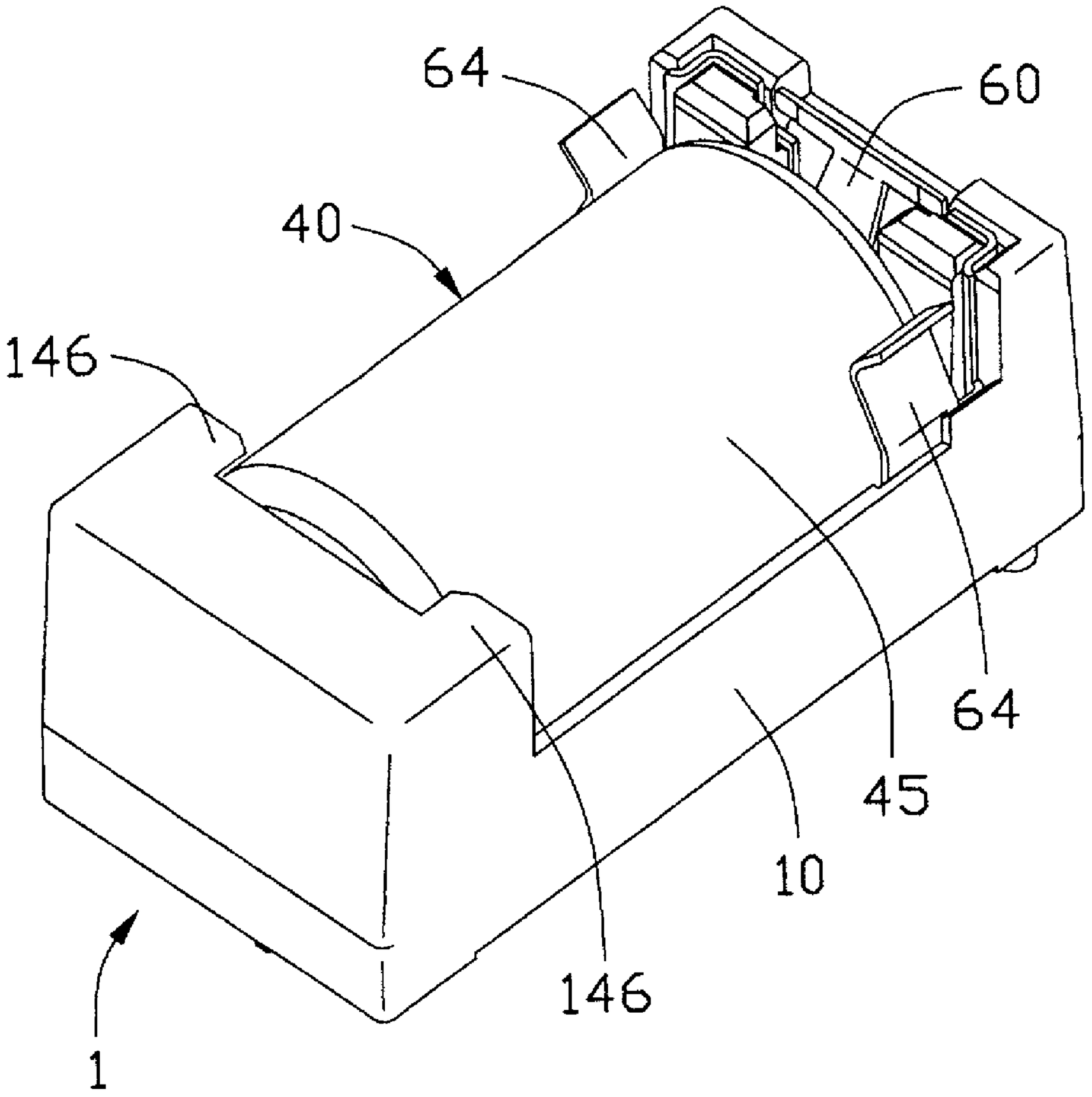

FIG. 10

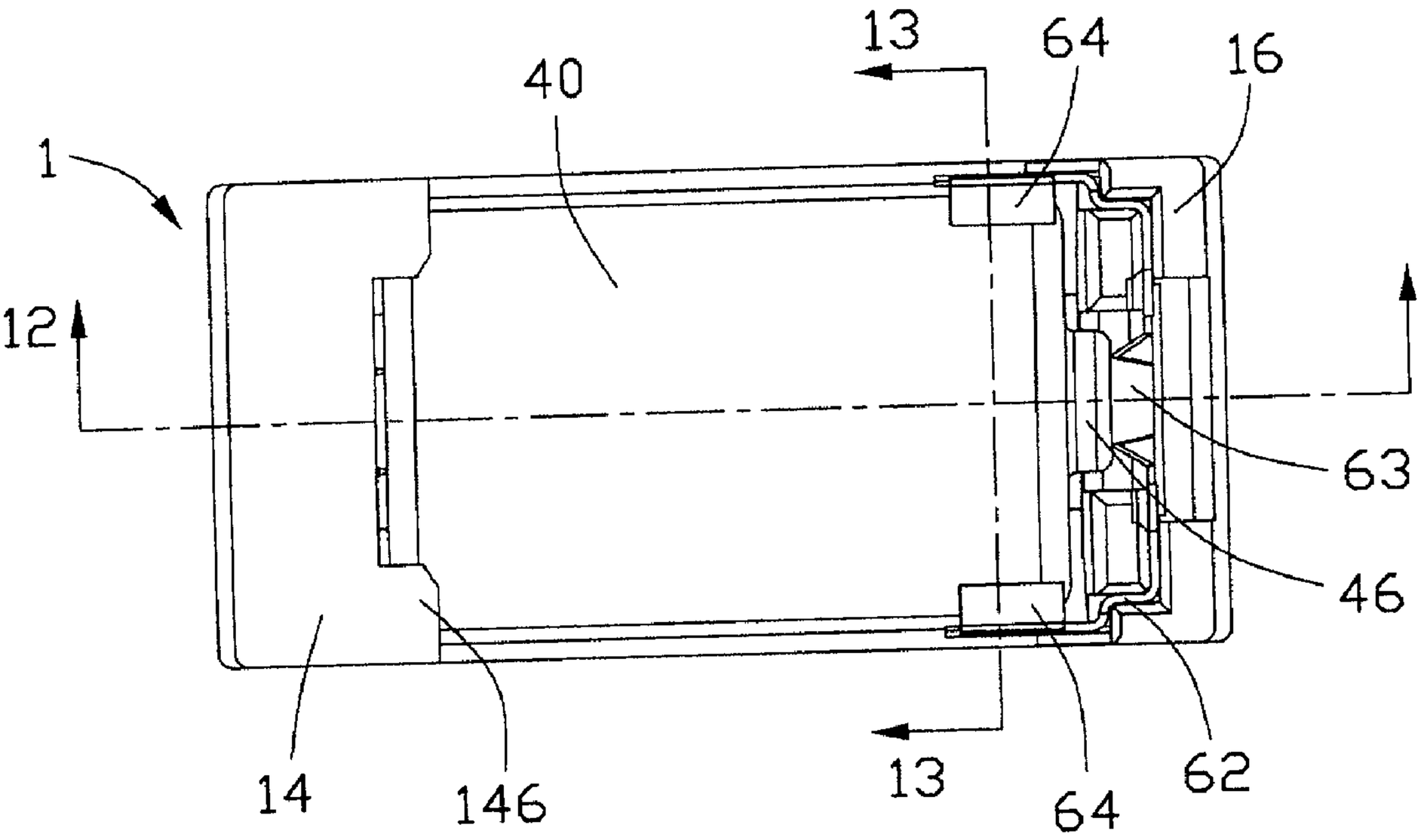

FIG. 11

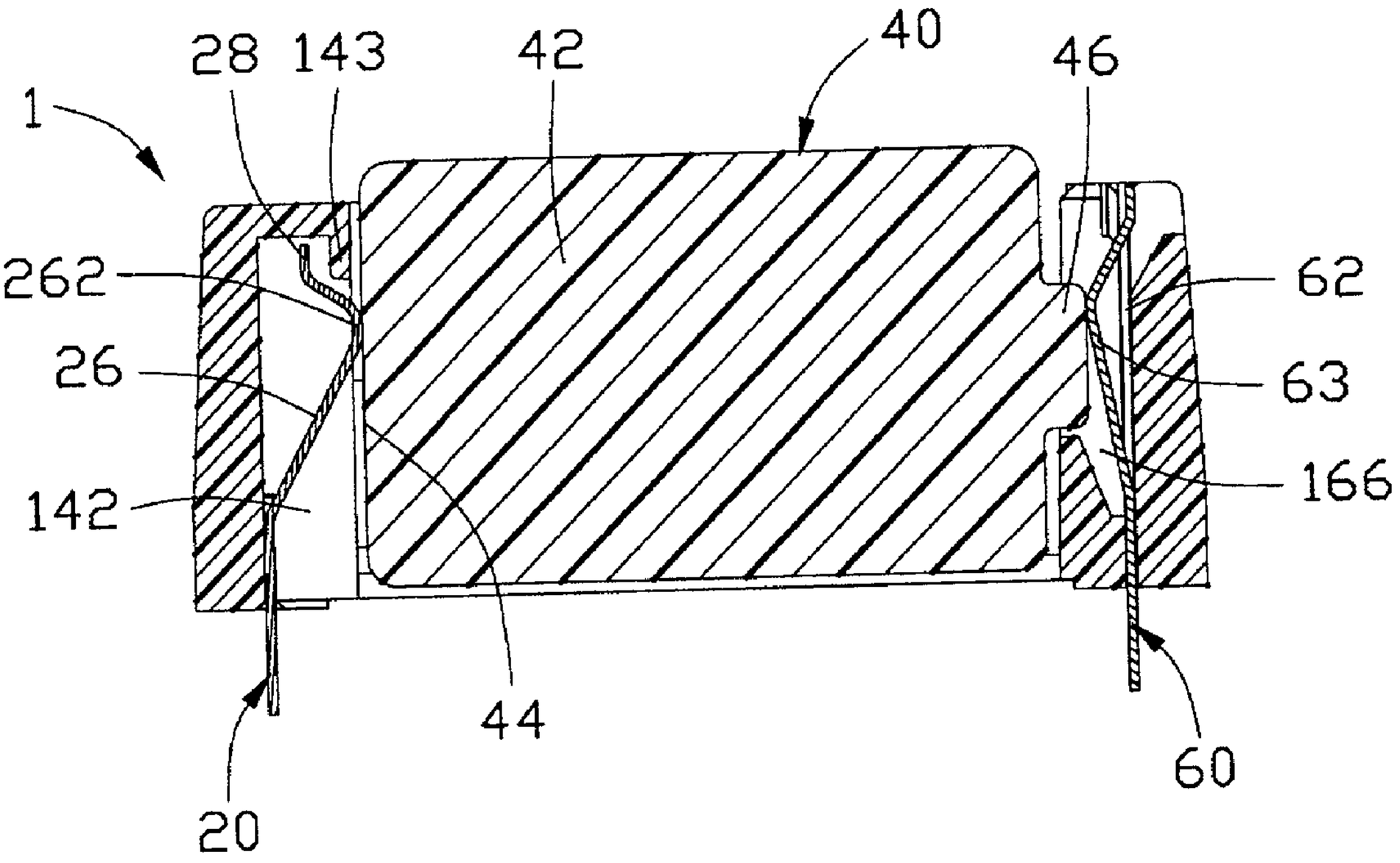

FIG. 12

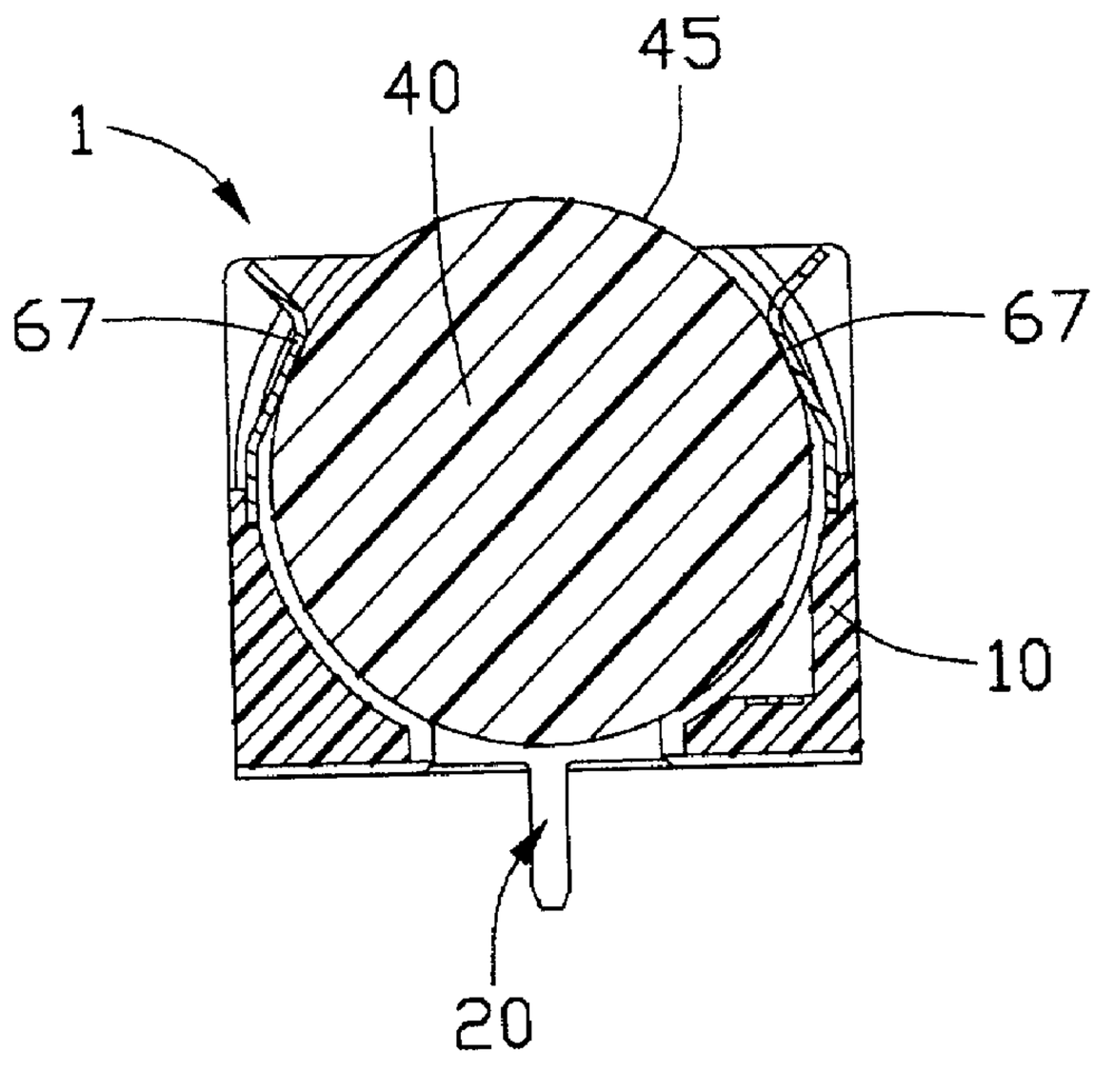

FIG. 13

BATTERY HOLDER HAVING MEANS FOR SECURELY RETAINING BATTERY IN POSITION

BACKGROUND OF THE INVENTION

[0001] 1. Field of the Invention

[0002] The present invention generally relates to a battery holder for holding and mounting a battery to for example a circuit board, and more particular to a battery holder having improved conductive contacts for both electrically engaging and reliably retaining the battery in place when the battery is inserted into the battery holder.

[0003] 2. Description of Prior Art

[0004] Battery holders have been employed for holding various forms of batteries, such as back up batteries for real time clocks in desk top computers. These batteries are typically ½ AA batteries and the battery holder is installed on the main or other circuit boards of the computer by terminal tails which are inserted into the circuit boards and soldered to the appropriate electrical circuit of the boards.

[0005] Such ½ AA battery holders are disclosed in U.S. Pat. Nos. 5,211,579, 5,395,263, 6,124,056, 5,827,619. Generally, a ½ AA battery has a cylindrical body having a first flat end surface, serving as a negative terminal, and a second end surface from which a protrusion concentrically projects, serving as a positive terminal. The battery holder is equipped with positive and negative contacts that electrically and respectively engage with positive and negative terminals of the battery for routing the electrical current from the battery to a power-consuming device to which the contacts of the battery holder are connected. Batteries of this type are sometimes adopted as backup power supply in a computer system. In that case, the positive and negative contacts of the battery holder are electrically connected to a main circuit board of the computer system.

[0006] However, the battery holder disclosed in each of the above mentioned U.S. patents is not provided with an effective means to retain the battery in place. Thus, the battery may be moved out of the holder or deviated from its original position during transportation or under a vibrating environment, thereby adversely affecting the electrical connection between the terminals of the battery and corresponding contacts of the battery holder. Hence, an improved battery holder is required to overcome the disadvantages of the prior art.

BRIEF SUMMARY OF THE INVENTION

[0007] A first object of the present invention is to provide a battery holder equipped with a conductive contact which can effectively retain the battery in place when the battery is inserted into the battery holder;

[0008] A second object of the present invention is to provide a battery holder equipped with a conductive contact which has a low manufacturing cost and is simple in assembling.

[0009] A battery holder in accordance with the present invention is adapted to retain a battery having opposite first and second end faces, the first end face forming a first electrical terminal of the battery, a reduced projection extending from the second end face to form a second electrical terminal of the battery. The battery holder comprises an insulative housing and a pair of first and second conductive contacts fastened to opposite ends of the housing. The housing has two opposite side walls and two opposite first and second end blocks connected with the side walls to cooperatively define a receiving space for receiving a battery. The first and second conductive contacts are respectively engaged with the first and second end blocks of the housing, and each forms a base section, a spring arm extending from one end of the base section for electrically connecting with one of the first and second electrical terminals of the battery when the battery is inserted in the receiving space, and a soldering tail extending from another end of the base section for soldering to a circuit board. Furthermore, one of the first and second conductive contacts forms a pair of clip members extending from opposite lateral sides of the base section for conductively abutting against an outer surface of the battery when the battery is disposed in the receiving space, thereby preventing the battery from moving or offsetting under variation situations.

[0010] Other objects, advantages and novel features of the invention will become more apparent from the following detailed description of the present embodiment when taken in conjunction with the accompanying drawings.

BRIEF DESCRIPTION OF THE DRAWINGS

[0011] **FIG. 1** is an exploded perspective view of a battery holder in accordance with the present invention;

[0012] **FIG. 2** is another exploded perspective view of the battery holder of **FIG. 1**;

[0013] **FIG. 3** is an assembled perspective view of **FIG. 1**;

[0014] **FIG. 4** is an assembled perspective view of **FIG. 2**;

[0015] **FIG. 5** is another perspective view of **FIG. 3**;

[0016] **FIG. 6** is a top view of **FIG. 3**;

[0017] **FIG. 7** is a cross-sectional view taken along line **7-7** of **FIG. 6**;

[0018] **FIG. 8** is a cross-sectional view taken along line **8-8** of **FIG. 6**;

[0019] **FIG. 9** is a cross-sectional view taken along line **9-9** of **FIG. 6**;

[0020] **FIG. 10** is an assembled perspective view of the battery holder of **FIG. 3** and a battery;

[0021] **FIG. 11** is a top view of **FIG. 10**;

[0022] **FIG. 12** is a cross-sectional view taken along line **12-12** of **FIG. 11**; and

[0023] **FIG. 13** is a cross-sectional view taken along line **13-13** of **FIG. 13**.

DETAILED DESCRIPTION OF THE INVENTION

[0024] With reference to the drawings and in particular to FIGS. **1** to **4**, a preferred embodiment of a battery holder **1** constructed in accordance with the present invention is adopted for holding a battery **40** (**FIG. 10**) having a cylindrical body **42** and opposite end surfaces respectively forming a flat negative terminal **44** and a protruded positive terminal **46** (both see **FIG. 12**) for electrically connecting with an underlying circuit board (not shown). The battery

holder **1** comprises a one-piece insulative housing **10** and first and second conductive contacts **20**, **60** attached to opposite ends of the housing **10**.

[**0025**] The housing **10** comprises a body **12** having a bottom surface **13** to be positioned on the circuit board. The body **12** further comprises front and rear end blocks **14**, **16** connected by two opposite side walls **18** whereby a receiving space **15** is defined therebetween for receipt of the battery **40**. Each side wall **18** has a curved inner face **182** in the space **15** for supporting the battery **40** in the holder body **12**. The inner faces **182** of the side walls **18** are space from each other, thereby defining a bottom opening **184** therebetween. The bottom opening **184** communicates with the receiving space **15**.

[**0026**] Further referring to **FIG. 7**, the front end block **14** defines an elongate recess **142** communicating with the receiving space **15** for receiving the first conductive contact **20** and a pair of slits **149** in the bottom surface **13** and communicating with the recess **142**. The front end block **14** forms a stopping bar **143** at an upper portion thereof and a pair of flanges **146** projecting from opposite ends of the stopping bar **143** toward the receiving space **15**. The rear end block **16** of the holder body **12** has an inner surface **162** on which two opposite raised portions **164** are formed and connected by a cross bar **168** therebetween. A notch **163** is defined therebetween the raised portions **164** and the cross bar **168**. A receiving slit **166** is formed between each raised portion **164** and the inner surface **162** of the rear end block **16** and communicates with the notch **163** for receiving the second conductive contact **60**. Additionally, a through hole **132** is defined in the bottom face **13** of the housing **10** and communicates with the receiving slit **166**.

[**0027**] The first conductive contact **20**, serving as a negative electrode of the battery holder **1**, comprises a base section **22** having opposite, barbed edges **24** to be interferentially retained in the slits **149** of the front end block **14**. A spring arm **26**, in a convex shape, extends from the base section **22** and substantially runs along the elongate recess **142**, and has a convex portion **262** and a free end **28** extending from the convex portion **262**. The convex configuration of the spring arm **26** ensures the sparing arm **26** to be resilient enough to have a reliable engagement with the negative terminal **44** of the battery **40** when the battery **40** is inserted into the battery holder **1**. A soldering tail **25** extends from the base section **22** in a direction substantially opposite to the spring arm **26**. The soldering tail **25** projects beyond the bottom surface **13** of the holder body **12** for being soldered to the circuit board (not shown).

[**0028**] The second contact **60**, serving as a positive electrode of the battery holder **1**, is received in the receiving slit **166** of the rear end block **16**. The second blade **60** comprises a base section **62**, two clip members **64** formed on opposite lateral sides of the base section **62** and a soldering tail **66** depending from the base section **62**. The base section **62** is disposed in the receiving slits **166** of the rear end block **16** and forms a curved resilient beam **63** located in the notch **163** for conductively contacting with the positive terminal **46** of the battery **40**. Additionally, a pair of barbs **67** are formed on the base section **62** and project outwardly to interferentially engage with the rear end block **16** to secure the second contact **60** in position. The soldering tail **66** extends through the hole **132** and beneath the bottom face **13** of the housing **10** for soldering to the circuit board. The clip members **64** vertically extend from upper portions of the lateral sides of the base section **62**, wherein the lateral sides extend perpendicularly from lateral edges of the base section **62** towards a middle of the battery holder **1**, and form a pair of curved projections **65** facing with each other. The projections **65** are thus formed to have a predetermined resiliency so that they can exert a clamping force to the circumferential periphery **45** of the battery **40**, thereby preventing the battery **40** from moving out of its installed position when it is inserted in the receiving space **15** of the battery holder **1**.

[**0029**] In assembly, referring to FIGS. **3** to **9**, the negative blade **20** is inserted into the elongate recess **142** of the front end block **14** from a position above the housing **10** to a position where the barbed edges **24** thereof are interferingly retained in the receiving slits **149**, and the free end **28** thereof is abutted against the stopping bar **143**. The positive contact **60** is then inserted into the receiving slits **166** of the rear end block **16** from a position above of the housing **10** to a position wherein the barbs **67** thereof are interferringly retained in the slit **166** for holding the positive contact **60** in position. The soldering tail **66** of the second contact **60** extends through the hole **132** and beneath the bottom face **13** for soldering to the circuit board. Meanwhile, the resilient beam **63** of the base section **62** is positioned in the notch **163** between the raised portions **164**.

[**0030**] In use, referring to FIGS. **10** to **13**, the battery **40** is inserted into the receiving space **15** of the housing **10** and the negative and positive terminals **44**, **46** thereof are conductively contacted with the curved portion **262** of the negative contact **20** and the resilient beam **63** of the positive contact **60**, respectively. Meanwhile, the curved projections **65** of the clip members **64** exert a clamping force against an upper portion of the circumferential periphery **45** of the battery **40** for preventing the battery **40** from moving out of the housing **10** due to vibration or unexpected force occurred to the holder **1**/battery **40** assembly. Thus, reliable electrical connections between the negative and positive terminals **44**, **46** of the battery **40** and the negative and positive contacts **20**, **60** of the holder **1** are effectively ensured by the clip members **64** of the present invention.

[**0031**] It is to be understood, however, that even though numerous characteristics and advantages of the present invention have been set forth in the foregoing description, together with details of the structure and function of the invention, the disclosure is illustrative only, and changes may be made in detail, especially in matters of shape, size, and arrangement of parts within the principles of the invention to the full extent indicated by the broad general meaning of the terms in which the appended claims are expressed.

What is claimed is:

1. A battery holder adapted to retain an elongate battery having opposite first and second terminals at opposite end faces of the battery, comprising:

an insulative housing having opposite side walls and opposite first and second end blocks connected with the side walls to cooperatively define a receiving space therebetween adapted for receiving a battery; and

a pair of first and second conductive contacts being respectively engaged with the first and second end

blocks, each of the first and second conductive contacts forming a base section, a spring arm extending from one end of the base section adapted for electrically connecting with one of the first and second electrical terminals of the battery, and a soldering tail extending from another end of the base section adapted for soldering to a circuit board; wherein

one of the first and second conductive contacts further forms a pair of clip members extending from opposite sides of the base section thereof, adapted for exerting a clamping force against a circumferential periphery of the battery when the battery is disposed in the receiving space.

2. The battery holder as claimed in claim 1, wherein the first end block defines a recess in an inner surface thereof and communicating with the receiving space for receiving the first conductive contact.

3. The battery holder as claimed in claim 2, wherein the first end block forms a stopping bar adjacent to the recess, and wherein the spring arm of the first conductive contact has a free end abutted against the stopping bar.

4. The battery holder as claimed in claim 3, wherein the base section of the first conductive contact forms several barbs on opposite sides thereof to be interferingly retained in the recess.

5. The battery holder as claimed in claim 1, wherein the second end block defines a slit for receiving the base section of the second conductive contact.

6. The battery holder as claimed in claim 5, wherein the base section of the second conductive contact forms several barbs for interferingly engaging with the slit.

7. The battery holder as claimed in claim 6, wherein each clip member extends vertically from an upper portion of the lateral side of the base section of the second conductive contact and forms a curved projection for abutting against an upper portion of the outer surface of the battery.

8. A battery holder assembly comprising:

an elongate battery having negative and positive terminals on opposite ends thereof, respectively;

a battery holder holding the battery and adapted for to electrically connecting the battery to a circuit board, comprising,

a dielectric housing defining a receiving space receiving the battery therein, and

negative and positive conductive contacts secured to opposite ends of the dielectric housing, each of the contacts forming a base section retained in the dielectric housing, a resilient beam conductively contacting a corresponding terminal of the battery, and a soldering tail adapted for soldering to the circuit board; wherein

one of the pair of negative and positive conductive contacts further forms a pair of clip members extending from opposite sides of the base section thereof, the clip members exerting a clamping force against a circumferential periphery of the battery to thereby hold the battery in the receiving space.

9. The battery holder assembly as claimed in claim 8, wherein the housing of the battery holder has opposite side walls and opposite first and second end blocks which cooperatively define the receiving space.

10. The battery holder as claimed in claim 9, wherein the first end block defines a recess in an inner surface thereof and communicating with the receiving space for receiving the first conductive contact.

11. The battery holder as claimed in claim 10, wherein the first end block forms a stopping bar adjacent to the recess, and wherein the resilient beam of the first conductive contact has a free end abutted against the stopping bar.

12. The battery holder as claimed in claim 11, wherein the base section of the first conductive contact forms several barbs on opposite sides thereof to be interferingly retained in the recess.

13. The battery holder as claimed in claim 9, wherein the second end block defines a slit for receiving the base section of the second conductive contact.

14. The battery holder as claimed in claim 13, wherein the base section of the second conductive contact forms several barbs for interferingly engaging with the slit.

15. The battery holder as claimed in claim 8, wherein each clip member extends vertically from an upper portion of the lateral side of the base section of the second conductive contact and forms a curved projection for abutting against an upper portion of the outer surface of the battery.

16. A battery holder assembly comprising:

an elongated battery defining a main body with positive and negative terminals at two opposite ends;

a battery holder defining a receiving space in which the battery is disposed;

positive and negative contacts located at two opposite ends of the holder and mechanically and electrically contacting the corresponding positive and negative terminals, respectively;

one of said positive and negative contacts further defining at least one clip member extending transversely to grasp the main body of the battery; and

at least a flange integrally formed on the holder and extending transversely to grasp the main body of the battery; wherein

said flange is located close to the other of said positive and negative contacts.

17. The assembly as claimed in claim 16, wherein said one of the positive and negative contacts is installed into the holder downwardly while the other of said positive and negative contacts is installed into the holder upwardly.

18. The assembly as claimed in claim 16, wherein said one of the positive and negative contacts is the positive contact and said other is the negative contact.

19. The assembly as claimed in claim 16, wherein the clip member grasps the main body of the battery around the positive terminal, and said flange grasps the main body of the battery around the negative terminal.

* * * * *