US 20030190744A1

(19) **United States**

(12) **Patent Application Publication**

(10) **Pub. No.: US 2003/0190744 A1**

(43) **Pub. Date: Oct. 9, 2003**

**McGarry et al.**

(54) **METHOD AND APPARATUS FOR PERFORMING BIOLOGICAL REACTIONS ON A SUBSTRATE SURFACE**

(75) Inventors: **Mark W. McGarry**, Scottsdale, AZ (US); **W. Travis Johnson**, Chandler, AZ (US); **George W. Hawkins**, Gilbert, AZ (US)

Correspondence Address:
**Robin M. Silva**
**DORSEY & WHITNEY LLP**
**Suite 3400**
**Four Embarcadero Center**
**San Francisco, CA 94111-4187 (US)**

(73) Assignees: **Motorola**; **Amersham**

(21) Appl. No.: **10/394,484**

(22) Filed: **Mar. 20, 2003**

**Related U.S. Application Data**

(63) Continuation of application No. 09/492,013, filed on Jan. 26, 2000, now Pat. No. 6,569,674, which is a continuation-in-part of application No. 09/464,490, filed on Dec. 15, 1999, now Pat. No. 6,589,778.

**Publication Classification**

(51) **Int. Cl.**[7] ..... **C12M 1/34**

(52) **U.S. Cl.** ..... **435/287.1**

(57) **ABSTRACT**

The present invention provides a method and an improved apparatus for removing gas bubbles from a reaction chamber comprising a flexible layer removably affixed to a substrate layer having a multiplicity of oligonucleotide binding sites disposed thereon, in which biological reactions are performed. The invention specifically relates to methods and apparatus for removing gas bubbles from a reaction chamber wherein target molecules contained in a sample fluid are reacted with probe molecules immobilized on a substrate having an array of oligonucleotide binding sites. The arrays are covered with a flexible, gas permeable layer that permits mixing of the sample fluid on the biochip and removal of gas bubbles from the fluid by use of a means for facilitating diffusion of gas bubbles across the flexible, gas permeable layer.

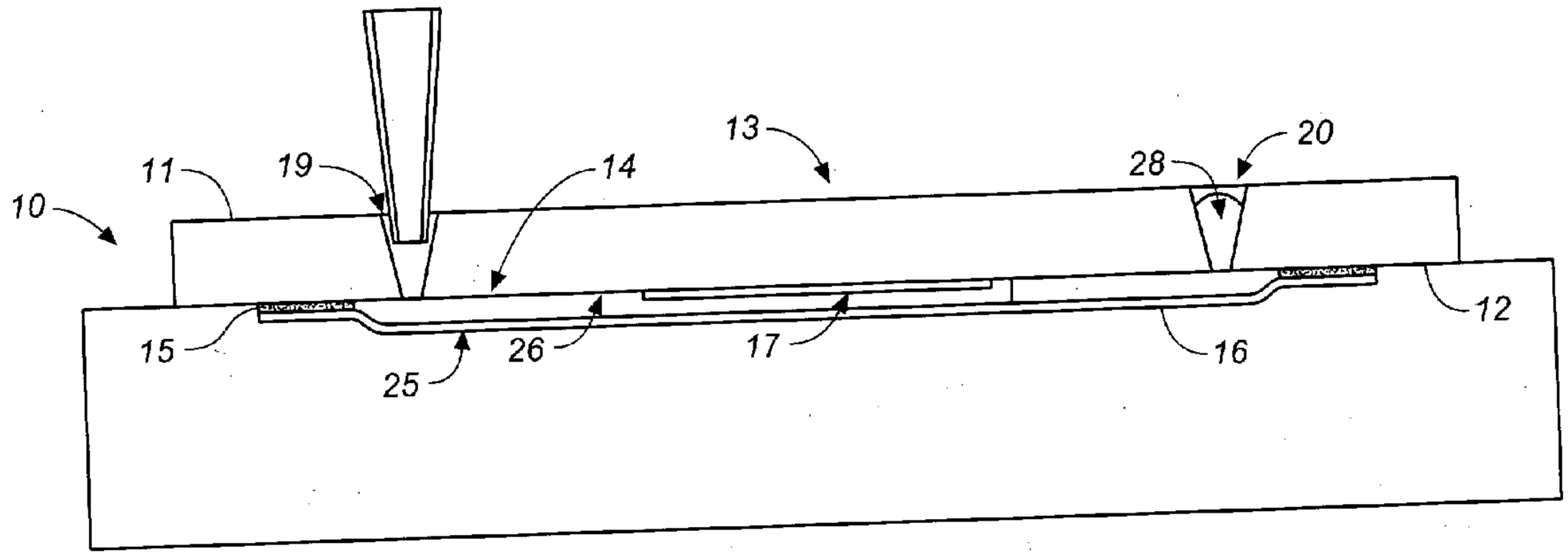

FIG._1A

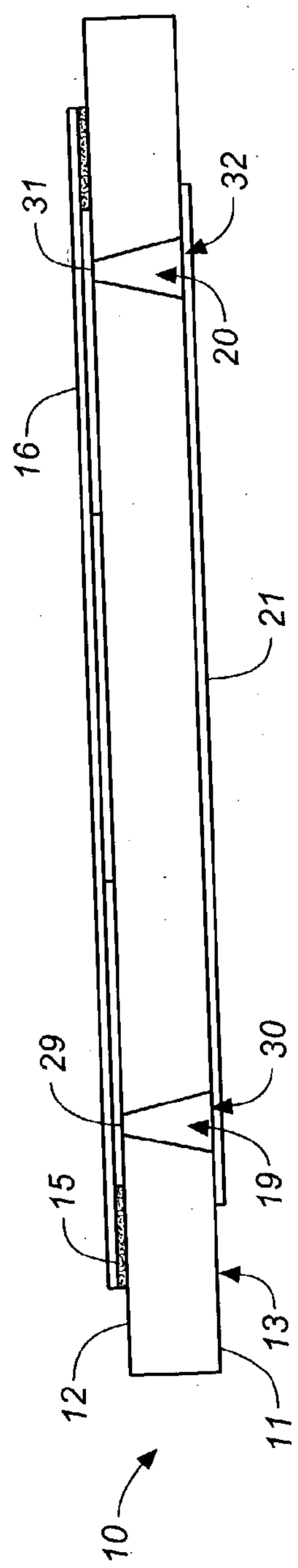


FIG._1B

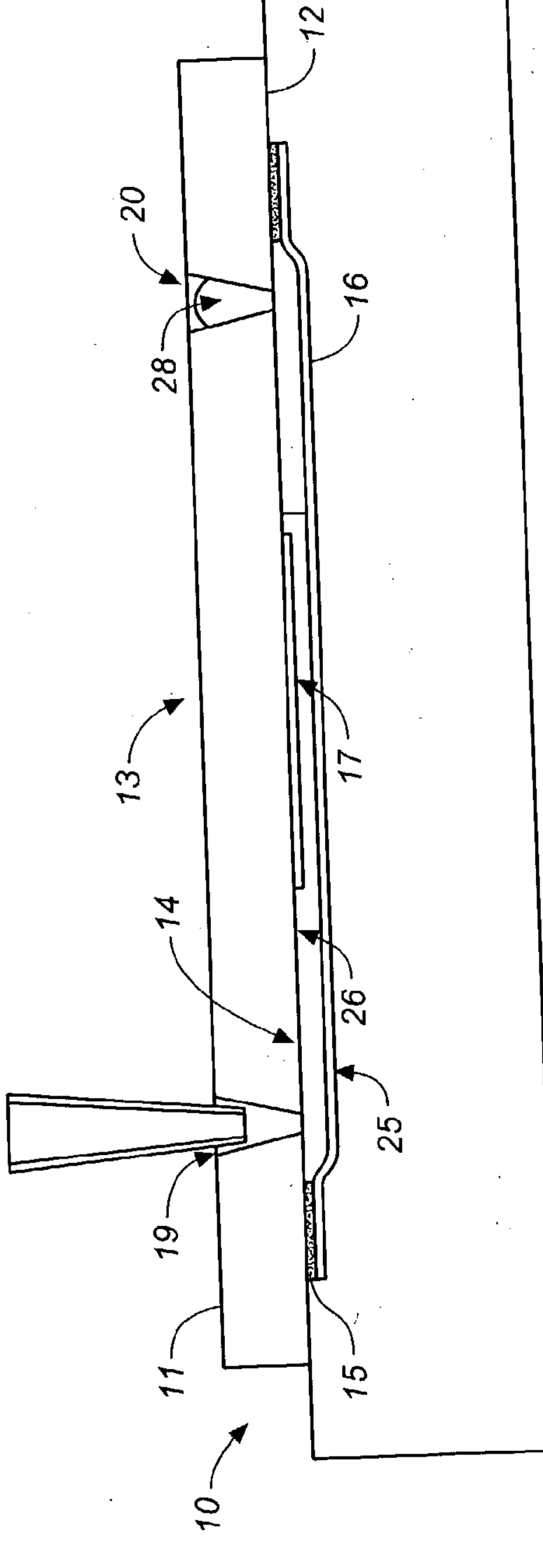


FIG._1C

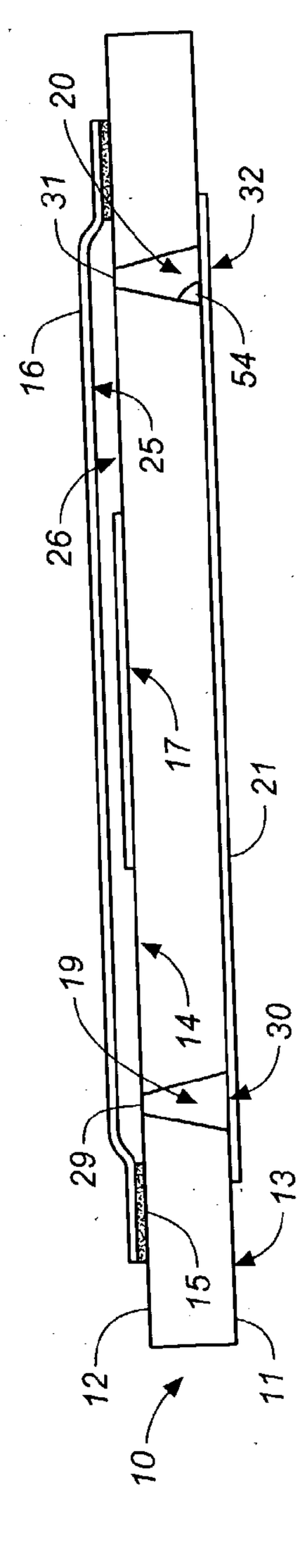

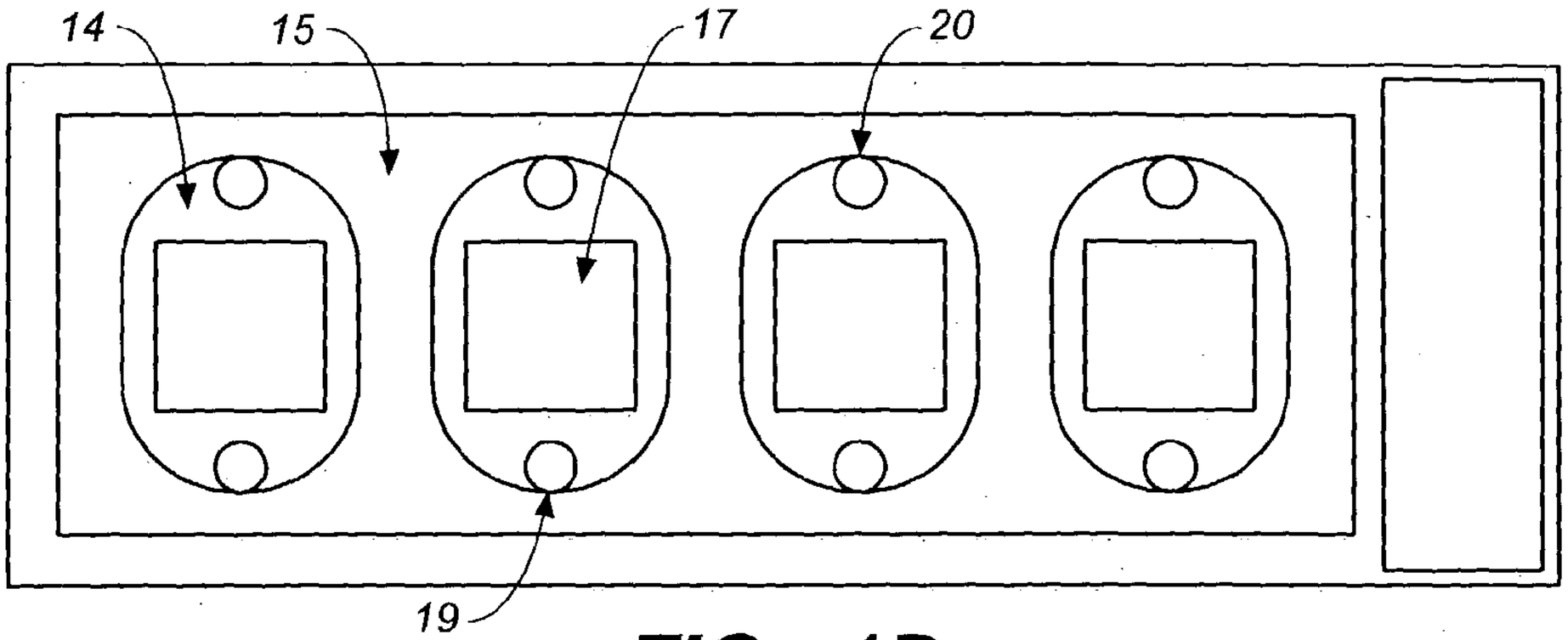


FIG._1D

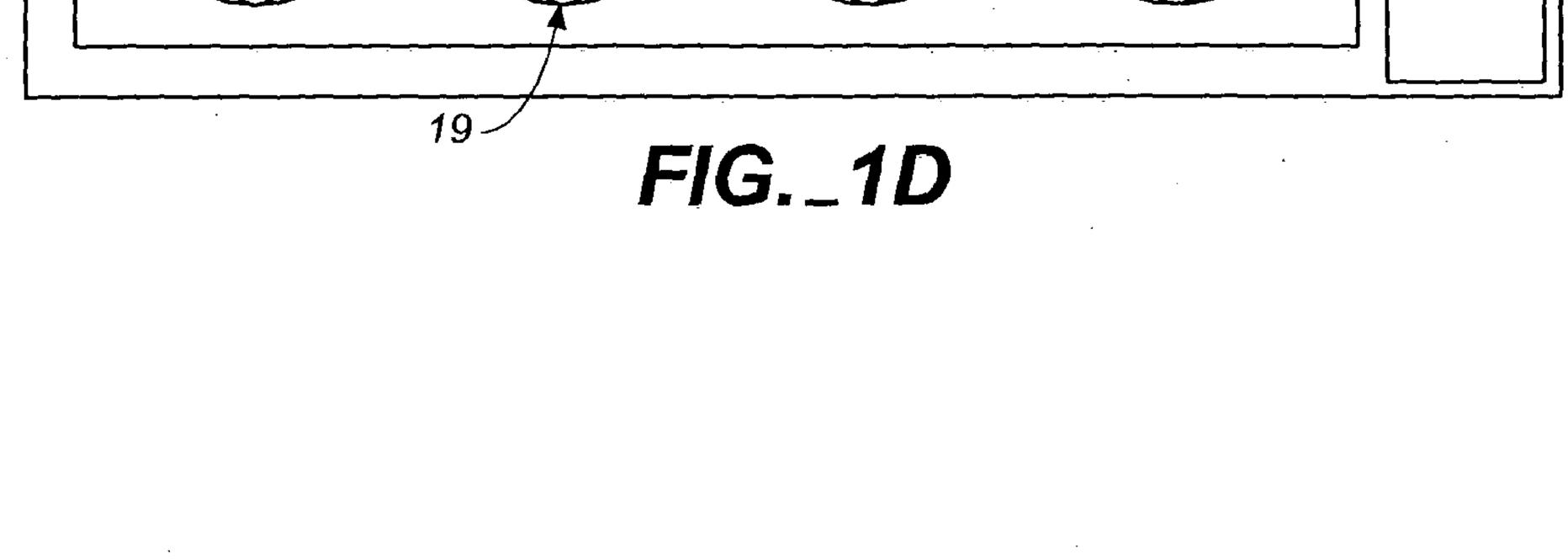


FIG._2

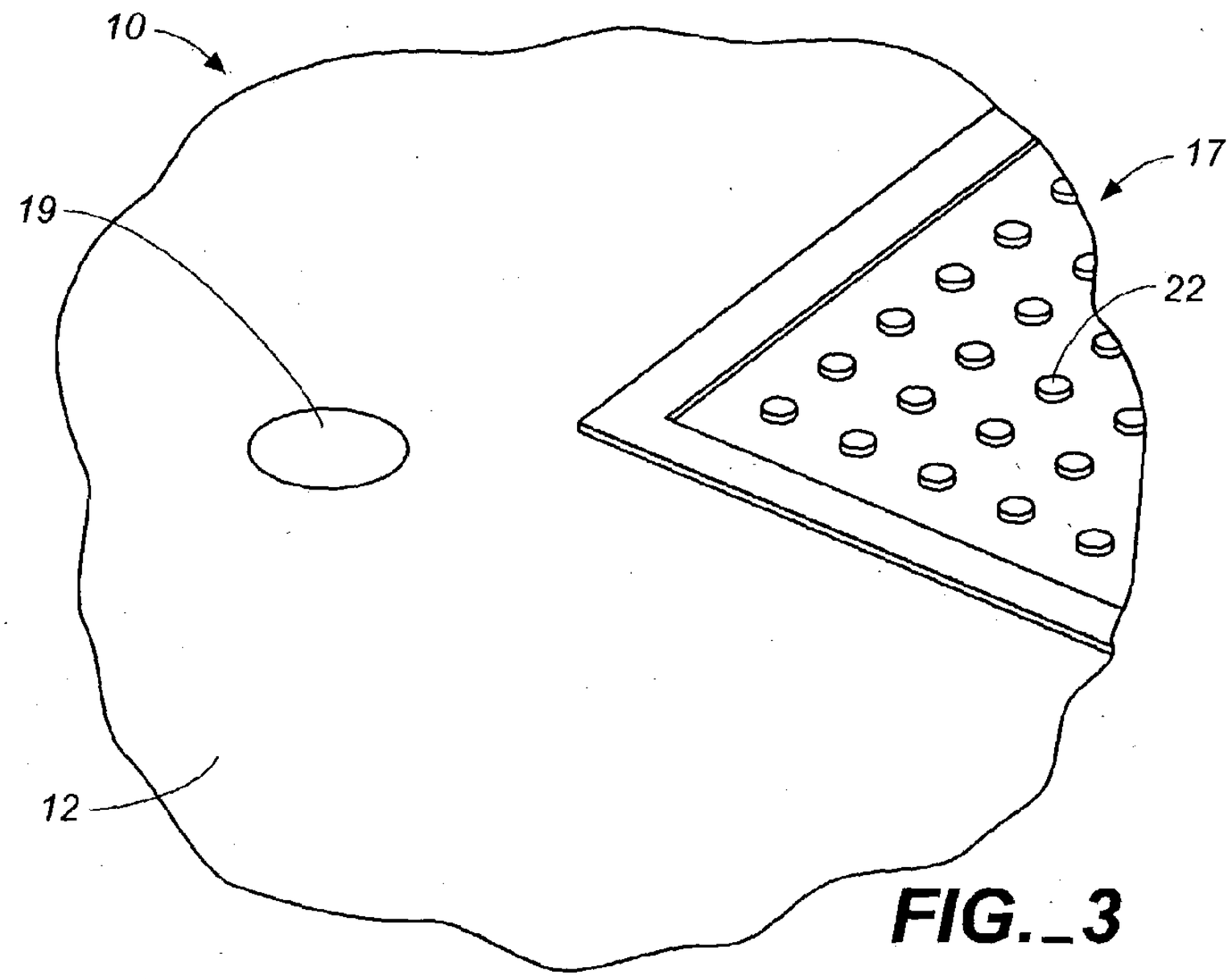


FIG._3




FIG._4

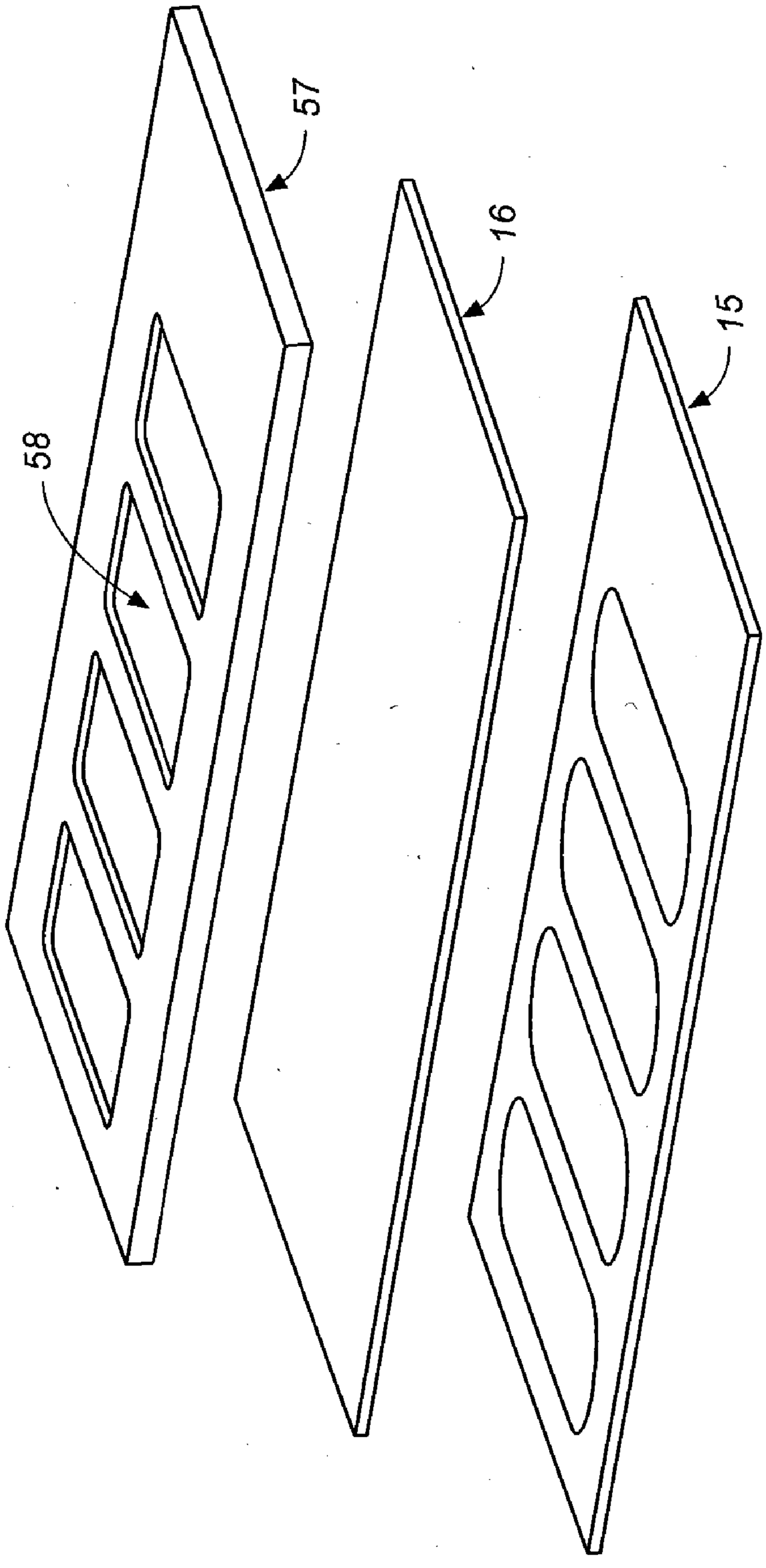


FIG._5

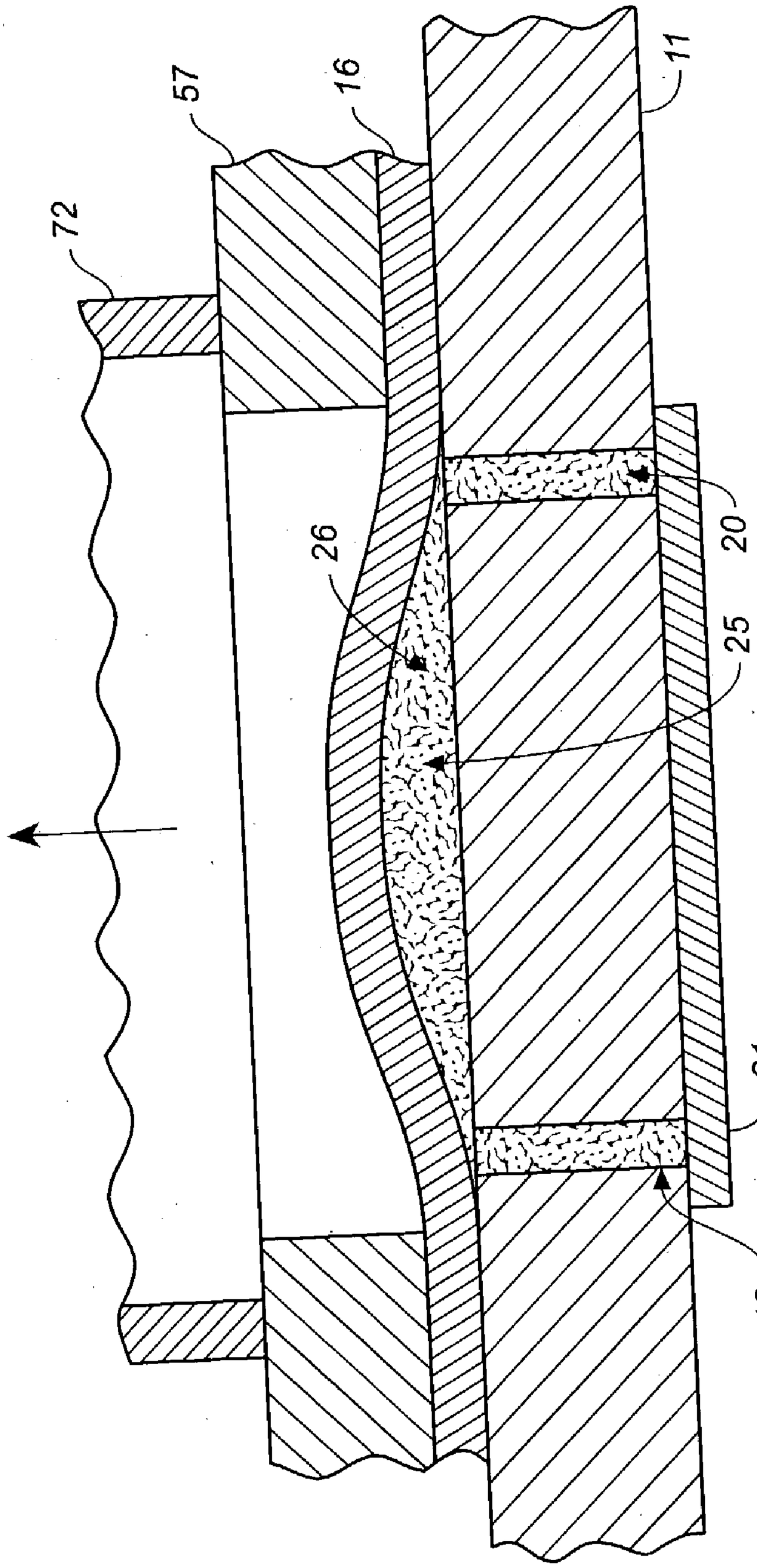


FIG._6

FIG._7

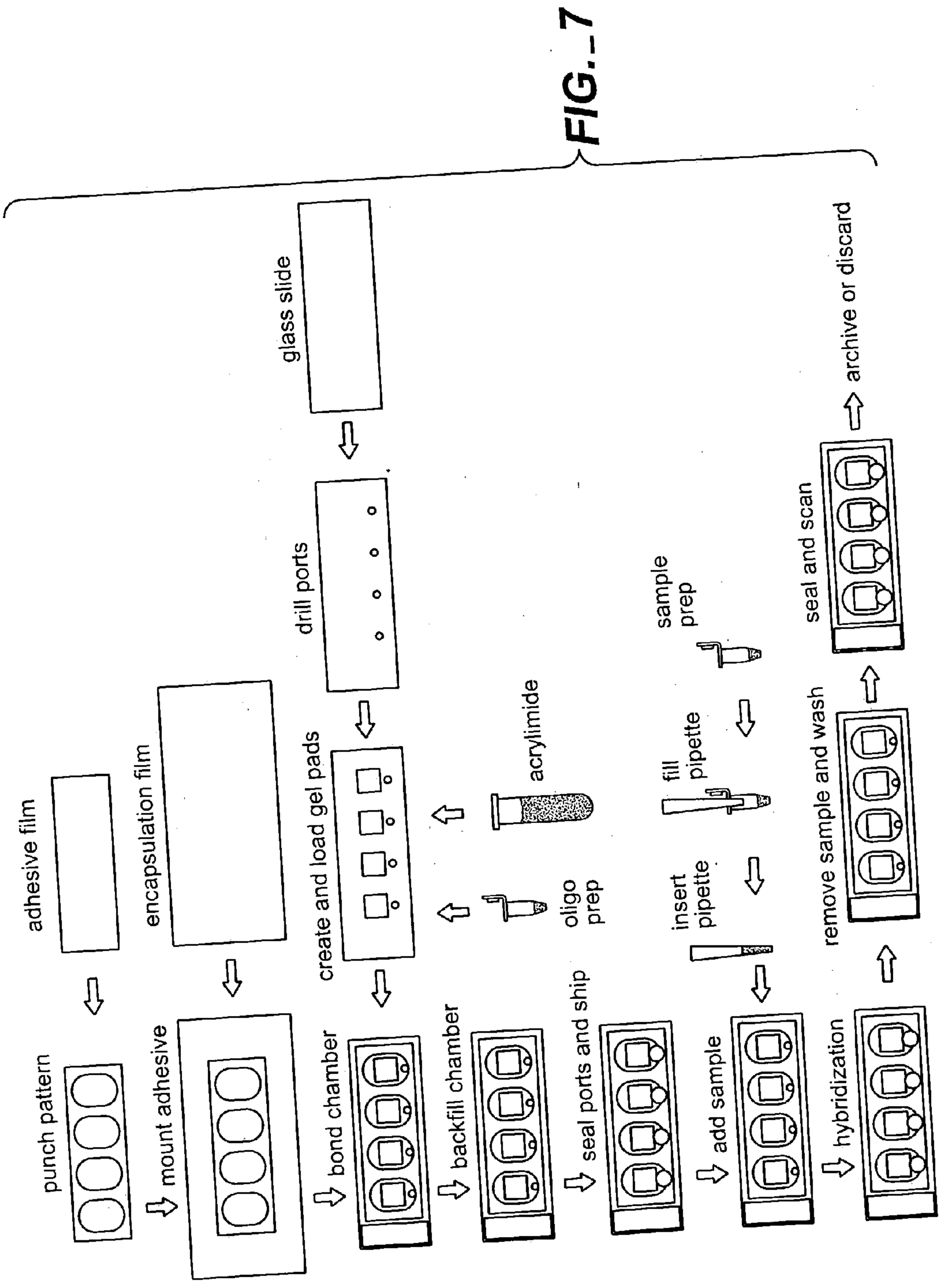
glass slide
drill ports
adhesive film
encapsulation film
create and load gel pads
acrylimide
oligo prep
punch pattern
mount adhesive
bond chamber
backfill chamber
seal ports and ship
sample prep
fill pipette
insert pipette
add sample
seal and scan
remove sample and wash
hybridization
archive or discard

# METHOD AND APPARATUS FOR PERFORMING BIOLOGICAL REACTIONS ON A SUBSTRATE SURFACE

## BACKGROUND OF THE INVENTION

[0001] 1. Related Applications

[0002] This application is a continuation-in-part of U.S. application Ser. No. 09/464,490, filed Dec. 15, 1999, which is incorporated herein by reference.

[0003] 2. Field of the Invention

[0004] The present invention relates to an apparatus for performing biological reactions on a substrate surface and a method for removing gas bubbles from the apparatus. Specifically, the invention relates to an apparatus having a flexible, gas permeable layer affixed to a substrate layer with an adhesive, wherein the flexible, gas permeable layer, the adhesive and the substrate layer enclose a reaction chamber, and a means for facilitating diffusion across the flexible, gas permeable layer. The diffusion-facilitating means creates a pressure gradient or concentration gradient across the flexible, gas permeable layer, thereby increasing the rate of diffusion of gas molecules from the reaction chamber across the flexible, gas permeable layer.

[0005] 3. Description of the Prior Art

[0006] Recent advances in molecular biology have provided the opportunity to identify pathogens, diagnose disease states, and perform forensic determinations using gene sequences specific for the desired purpose. This explosion of genetic information has created a need for high-capacity assays and equipment for performing molecular biological assays. Most urgently, there is a need to miniaturize, automate, standardize and simplify such assays. While these assays were originally developed in research laboratories working with purified products and performed by highly skilled individuals, adapting these procedures to clinical uses, such as diagnostics, forensics and other applications, has produced the need for equipment and methods that allow less-skilled operators to effectively perform the assays under higher capacity, less stringent assay conditions.

[0007] Existing technology utilizes the binding of molecules contained within a biologically reactive sample fluid, hereinafter referred to as target molecules, onto molecules contained within biologically reactive sites, hereinafter referred to as probe molecules. The primary enabler of this technology is an apparatus commonly referred to as a biochip, which comprises one or more ordered microscopic arrays ("microarrays") of biologically reactive sites immobilized on the surface of a substrate. A biologically reactive site can be created by dispensing a small volume of a fluid containing a biological reagent onto a discrete location on the surface of a substrate, also commonly referred to as spotting. To enhance immobilization of probe molecules, biochips can include a 2-dimensional array of 3-dimensional polymeric anchoring structures (for example, polyacrylamide gel pads) attached to the surface of the substrate. Probe molecules such as oligonucleotides are covalently attached to polyacrylamide-anchoring structures by forming amide, ester or disulfide bonds between the biomolecule and a derivatized polymer comprising the cognate chemical group. Covalent attachment of probe molecules to such polymeric anchoring structures is usually performed after polymerization and chemical cross-linking of the polymer to the substrate is completed.

[0008] Biochips are advantageously used to perform biological reactions on the surface thereof. Existing apparatus for performing biological reactions on a substrate surface, however, are deficient in that they either require unacceptably large volumes of sample fluid to operate properly, cannot accommodate substrates as large as or larger than a conventional microscope slide, cannot independently accommodate a plurality of independent reactions, or cannot accommodate a substrate containing hydrogel-based microarrays. Most existing apparatus also do not allow introduction of fluids in addition to the sample fluid (such as wash buffers, fluorescent dyes, etc.) into the reaction chamber. Disposable apparatus must be disassembled and reassembled around the biochip every time a new fluid must be introduced. Other existing apparatus are difficult to use in a laboratory environment because they cannot be loaded with standard pipet tips and associated pipettor apparatus.

[0009] Many existing apparatus also exhibit unacceptable reaction reproducibility, efficiency, and duration. Reaction reproducibility may be adversely affected by bubble formation in the reaction chamber or by the use of biologically incompatible materials for the reaction chamber. Reaction duration and efficiency may be adversely affected by the presence of concentration gradients in the reaction chamber.

[0010] Bubbles can form upon introduction of sample fluid to the reaction chamber or by outgassing of the reaction chamber materials. When gas bubbles extend over the substrate surface in an area containing biologically reactive sites, the intended reaction may intermittently fail or yield erroneous results because the intended concentration of the sample fluid mixture has been compromised by the presence of gas bubbles.

[0011] Biologically incompatible reaction chamber materials may cause unacceptable reaction reproducibility, by interacting with the sample fluid, thus causing the intended reaction to intermittently fail or yield erroneous results.

[0012] Incomplete mixing of the sample fluid can introduce concentration gradients within the sample fluid that adversely impact reaction efficiency and duration. This effect is most pronounced when there is a depletion of target molecules in the local volume surrounding a biologically reactive site. During a biological reaction, the probability that a particular target molecule will bind to a complementary (immobilized) probe molecule is determined by the given concentration of target molecules present within the sample fluid volume, the diffusion rate of the target molecule through the reaction chamber, and the statistics of interaction between the target molecule and the complementary probe molecule. For diagnostic assays, target DNA molecules are often obtained in minute (<picomol) quantities. In practice, it can take tens of hours for a hybridization reaction to be substantially complete at the low target nucleic acid molecule levels available for biological samples. Concentration gradients in the hybridization chamber can further exacerbate this problem.

[0013] U.S. Pat. No. 5,948,673 to Cottingham discloses a self-contained multi-chamber reactor for performing both DNA amplification and DNA probe assays in a sealed unit

wherein some reactants are provided by coating the walls of the chambers and other reactants are introduced into the chambers prior to starting the reaction in order to eliminate flow into and out of the chamber. No provisions are made for eliminating gas bubbles from the chambers.

[0014] There remains a need in the art for methods and apparatus for performing biological reactions on a substrate surface that use a low volume of sample fluid, that accommodate substrates as large as or larger than a conventional microscope slide, that accommodate a plurality of independent reactions, and that accommodate a substrate surface having one or more hydrogel-based microarrays attached thereto. There also remains a need in the art for an apparatus that allows introduction of fluids in addition to sample fluid into each reaction chamber via standard pipet tips and associated pipettor apparatus. There also remains a need in the art for such an apparatus that increases reaction reproducibility, increases reaction efficiency, and reduces reaction duration. There also remains a need in this art for a simple method for removing gas bubbles from such an apparatus. These needs are particularly striking in view of the tremendous interest in biochip technology, the investment and substantial financial rewards generated by research into biochip technology, and the variety of products generated by such research.

## SUMMARY OF THE INVENTION

[0015] The invention provides an apparatus for performing biological reactions on a substrate surface and a method for removing gas bubbles from the apparatus to prevent interference with biological reactions such as hybridization at reaction sites on the substrate surface. Specifically, the method of the invention is directed to an apparatus comprising a flexible, gas permeable layer affixed to a biochip with an adhesive, wherein the flexible, gas permeable layer, the adhesive, and the biochip enclose a reaction chamber, and a means for facilitating diffusion of gas molecules out of the reaction chamber across the flexible, gas permeable layer. The diffusion-facilitating means creates a pressure gradient or concentration gradient across the flexible, gas permeable layer, thereby increasing the rate of diffusion of gas molecules from the reaction chamber through the flexible, gas permeable layer.

[0016] The biochip comprises a substrate having a first surface and a second surface, wherein the first surface contains an array of biologically reactive sites, and is preferably an oligonucleotide array. The array is provided in an area bounded by an adhesive set down on the first substrate surface. The flexible, gas permeable layer, the adhesive and the first substrate surface further define a volume comprising a reaction chamber.

[0017] The flexible, gas permeable layer preferably is deformable, translucent, and porous. More preferably, the flexible, gas permeable layer is selectively permeable to gas but impermeable to liquid. Most preferably, the flexible, gas permeable layer is selectively permeable to gases and impermeable to liquids because the surface tension of the sample fluid prevents escape of the liquid through the pores of the flexible membrane.

[0018] In certain embodiments of the invention, the substrate comprises a multiplicity of oligonucleotide arrays, which are contained in one or a plurality of areas bounded by the adhesive and covered by the flexible, gas permeable layer.

[0019] Each of the reaction chambers also preferably include a first port, and certain embodiments further include a second port, that transverses the substrate and comprises a first opening on the first substrate surface and a second opening on the second substrate surface. The openings of these ports on the second substrate surface are covered by a removable cover, most preferably a foil tape. The openings of these ports on the first substrate surface are provided within the area bounded by the adhesive.

[0020] The adhesive, the flexible, gas permeable layer and the substrate also enclose a reaction chamber that is filled prior to use with a water-soluble compound. The water-soluble compound is preferably a solid at a temperature most preferably at or below room temperature, and a liquid at higher temperatures, most preferably below about 100° C.

[0021] In preferred embodiments, the diffusion-facilitating means creates a pressure differential across the flexible, gas permeable layer. In more preferred embodiments, the diffusion-facilitating means comprises a vacuum source removably affixed to the flexible, gas permeable layer, wherein the vacuum source is used to apply a vacuum to the flexible, gas permeable layer. Most preferably, the vacuum source comprises a vacuum pump connected by a length of plastic tubing to a reducer that completely encloses the area defined by the adhesive and is removably sealed to the flexible, gas permeable layer.

[0022] The chamber is also optionally supplied with a roller, most preferably a patterned roller, positioned in contact with the flexible, gas permeable layer and movable longitudinally across the surface of the chamber for mixing sample fluid and wash solutions as required.

[0023] Specific preferred embodiments of the present invention will become evident from the following more detailed description of certain preferred embodiments and the claims.

## DESCRIPTION OF THE DRAWINGS

[0024] Presently preferred embodiments of the invention are described with reference to the following drawings.

[0025] FIGS. 1A-1D are views of an illustrative embodiment of the present invention illustrating the preparation of a chamber of the invention for reaction. **FIG. 1A** is a cross-sectional view of the apparatus illustrating a reaction chamber prefilled with a water-soluble compound. **FIG. 1B** is a cross-sectional view of the apparatus illustrating the mixing of the water-soluble compound and the biological sample fluid. **FIG. 1C** is a cross-sectional view of the apparatus illustrating a chamber filled with the sample fluid/water-soluble compound mixture, wherein the first and second ports are covered with a seal. **FIG. 1D** is a top plan view of the apparatus illustrating the pattern of adhesive defining the individual areas containing the arrays of oligonucleotide probes.

[0026] **FIG. 2** is an exploded perspective view of the array of biomolecular probes showing the positioning of the gel pads on the substrate of a preferred embodiment of the invention.

[0027] **FIG. 3** is an exploded cross-sectional view of a chamber showing the array of gel pads of a preferred embodiment of the invention.

[0028] **FIG. 4** is an exploded cross-sectional view of a port illustrating the conical shape of the port of a preferred embodiment of the invention.

[0029] **FIG. 5** is a perspective view of the label layer, the flexible, gas permeable layer and the adhesive of a preferred embodiment of the invention.

[0030] **FIG. 6** is a cross-sectional view of a preferred embodiment of the present invention illustrating the application of vacuum to a reaction chamber.

[0031] **FIG. 7** illustrates the assembly and use of a preferred embodiment of the present invention.

## DESCRIPTION OF THE PREFERRED EMBODIMENTS

[0032] The present invention provides an apparatus for performing high-capacity biological reactions on a biochip comprising a substrate having an array of biological binding sites. The invention also provides a method for removing gas bubbles from the apparatus. The invention is specifically directed to methods for removing gas bubbles from an apparatus comprising a reaction chamber having one or more arrays, preferably comprising arrays consisting of gel pads, and most preferably comprising arrays consisting of 3-dimensional polyacrylamide gel pads, wherein biological reactions are performed by reacting a biological sample containing a target molecule of interest with a complementary probe molecule immobilized on the biochip.

[0033] As used herein, the term "array" refers to an ordered spatial arrangement, particularly an arrangement of immobilized biomolecules or polymeric anchoring structures.

[0034] As used herein, the term "addressable array" refers to an array wherein the individual elements have precisely defined x and y coordinates, so that a given element at a particular position in the array can be identified.

[0035] As used herein, the terms "probe" and "biomolecular probe" refer to a biomolecule used to detect a complementary biomolecule. Examples include antigens that detect antibodies, oligonucleotides that detect complimentary oligonucleotides, and ligands that detect receptors. Such probes are preferably immobilized on a substrate.

[0036] As used herein, the terms "bioarray,""biochip" and "biochip array" refer to an ordered spatial arrangement of immobilized biomolecules or polymeric anchoring structures on a solid supporting substrate. Preferred probe molecules include nucleic acids, oligonucleotides, peptides, ligands, antibodies and antigens; oligonucleotides are the most preferred probe species.

[0037] The invention is advantageously used for performing biological reactions using biochips **18**, preferably at room temperature or at slightly elevated temperatures. Biochips, as used in the art, encompass substrates containing arrays or microarrays, preferably ordered arrays and most preferably ordered, addressable arrays, of biological molecules that comprise one member of a biological binding pair. Typically, such arrays are oligonucleotide arrays comprising a nucleotide sequence that is complementary to at least one sequence that may be or is expected to be present in a biological sample. Alternatively, peptides or other small molecules can be arrayed in such biochips for performing, inter alia, immunological analyses (wherein the arrayed molecules are antigens) or assaying biological receptors (wherein the arrayed molecules are ligands, agonists or antagonists of said receptors).

[0038] One characteristic of biochips is the manner in which the arrayed biomolecules are attached to the surface of the biochip. Conventionally such procedures involve multiple reaction steps, often requiring chemical modification of the solid support itself. Even in embodiments comprising absorption matrices, such as hydrogels, present on a solid support, chemical modification of the gel polymer is necessary to provide a chemical functionality capable forming a covalent bond with the biomolecule. The efficiency of the attachment chemistry and strength of the chemical bonds formed are critical to the fabrication and ultimate performance of the microarray.

[0039] Preferably, polyacrylamide hydrogels and gel pads are used as binding layers to adhere biological molecules to surfaces, wherein said biological molecules include but are not limited to small molecule ligands, hormomes, nutrients, metabolites, proteins, peptides, oligonucleotides, polynucleotides, and larger nucleic acid fragments. The gel pads for use with the apparatus of the present invention are conveniently produced as thin sheets or slabs, typically by depositing a solution in between two glass surfaces (such as glass plates or microscope slides) using a spacer to obtain the desired thickness of the polyacrylamide gel, wherein the solution comprises a monomer, most preferably an acrylamide monomer, a crosslinker such methylene bisacrylamide, a catalyst such as N,N,N',N'-tetramethylethylendiamine (TEMED) and an initiator such as ammonium persulfate for chemical polymerization, or 2,2-dimethoxy-2-phenyl-acetophone (DMPAP) for photopolymerization. Generally, the acrylamide monomer and crosslinker are prepared in a solution of about 4-5% acrylamide (having an acrylamide/bisacrylamide ratio of 19:1) in water/glycerol, with a small amount of initiator added. The solution is polymerized and crosslinked either by ultraviolet (UV) radiation (e.g., 254 nm for at least about 15 minutes, or other appropriate UV conditions, collectively termed "photopolymerization"), or by thermal initiation at elevated temperature (e.g., typically at about 40° C.). Following polymerization and crosslinking, the top glass slide is removed from the surface to uncover the gel. The pore size (and hence the "sieving properties") of the gel can be controlled by changing the amount of crosslinker and the percent of the monomer in the polymerization solution. The pore size also can be controlled by changing the polymerization temperature.

[0040] In the fabrication of polyacrylamide hydrogel arrays (i.e., patterned gels) used as binding layers for biological molecules, the acrylamide solution typically is imaged through a mask during the UV polymerization/crosslinking step. The top glass slide is removed after polymerization, and the unpolymerized monomer is washed away (developed) with water, leaving a fine feature pattern of polyacrylamide hydrogel, which is used to produce the crosslinked polyacrylamide hydrogel pads. Further, in an application of lithographic techniques known in the semiconductor industry, light can be applied to discrete locations

on the surface of a polyacrylamide hydrogel to activate these specified regions for the attachment of an oligonucleotide, an antibody, an antigen, a hormone, hormone receptor, a ligand or a polysaccharide on the surface (e.g., a polyacrylamide hydrogel surface) of a solid support (see, for example, International Application, Publication No. WO 91/07087, incorporated by reference).

[**0041**] For hydrogel-based arrays using polyacrylamide, biomolecules (such as oligonucleotides) are covalently attached by forming an amide, ester or disulfide bond between the biomolecule and a derivatized polymer comprising the appropriate cognate chemical group. Covalent attachment of the biomolecule to the polymer is usually performed after polymerization and chemical cross-linking of the polymer is completed

[**0042**] Alternatively, oligonucleotides bearing 5'-terminal acrylamide modifications can be used that efficiently copolymerize with acrylamide monomers to form DNA-containing polyacrylamide copolymers (Rehman et al., 1999, *Nucleic Acids Research* 27: 649-655). Using this approach, stable probe-containing layers can be fabricated on supports (e.g., microtiter plates and silanized glass) having exposed acrylic groups. This approach has been commercially marketed as "Acrydite™" capture probes (available from Mosaic Technologies, Boston, Mass.). The Acrydite moiety is a phosporamidite that contains an ethylene group capable of free-radical copolymerization with acrylamide, and which can be used in standard DNA synthesizers to introduce copolymerizable groups at the 5' terminus of any oligonucleotide probe.

[**0043**] With reference to the illustration provided in **FIG. 1**, the invention provides an apparatus **10** comprising a biochip, which itself comprises a substrate **11** having a first surface **12** and a second surface **13** opposite thereto, and a flexible, gas permeable layer **16** affixed to the first substrate surface **12** by an adhesive **15**. On the first surface **12** is an area **14** bounded by adhesive **15** and completely covered by flexible, gas permeable layer **16**. Flexible, gas permeable layer **16**, adhesive **15**, and first substrate surface **12** enclose a volume or reaction chamber **25**. The ratio of volume **25** to area **14** is preferably from about 0.025 $\mu$L/mm$^2$ to about 0.25 $\mu$L/mm$^2$, more preferably from about 0.1 $\mu$L/mm$^2$ to about 0.25 $\mu$L/mm$^2$, and most preferably from about 0.1 $\mu$L/mm$^2$ to about 0.2 $\mu$L/mm$^2$.

[**0044**] As shown in **FIG. 2**, an array **17** of biomolecules, which is preferably affixed to first substrate surface **12**, is positioned between flexible, gas permeable layer **16** and first substrate surface **12** in area **14**. In preferred embodiments, the array comprises at least about 400, more preferably at least about 1000, and most preferably at least about 10,000 biomolecular probes. Array **17** most preferably further comprises gel pads **22**. **FIG. 3** provides an exploded cross-sectional view of a portion of array **17** illustrating the gel pads **22**. Each gel structure **22** is preferably cylindrical, most preferably having about a diameter of about 100 microns and a thickness of about 25 microns. The distance between each site within each array **17** is most preferably about 300 microns.

[**0045**] A layer of a water-soluble compound **28** having a melting point of about 30° C. to about 60° C., more preferably of about 35° C. to about 50° C., and most preferably of about 35° C. to about 45° C. is deposited in volume **25** bounded by first substrate surface **12**, flexible, gas permeable layer **16**, and adhesive **15**. Preferably, the water-soluble compound is biocompatible, does not stick to or clog the pores of flexible, gas permeable layer **16**, and serves to prevent mechanical damage to gel pads **22**. In a preferred embodiment, the compound is polyethylene glycol, most preferably polyethylene glycol **600**. The compound **28** is deposited so that the entire volume **25**, with the exception of that portion of volume **25** occupied by array **17**, comprises compound **28**.

[**0046**] Array **17** can be positioned on surface **12** by providing markings, most preferably holes or pits in surface **12**, that act as fiducials or reference points on surface **12** for accurate placement of array **17**. The presence of said fiducials is particularly advantageous in embodiments comprising a multiplicity of arrays **17** in one or a multiplicity of areas **14** on surface **12**, wherein accurate placement of said arrays is required for proper spacing and orientation of the arrays on the reaction chamber.

[**0047**] Substrate **11** further comprises a first port **19** that transverses the substrate from the first surface **12** to the second surface **13** and forms first and second openings **29** and **30** on said first and second surfaces, respectively. The first port **19** serves as an input port and is positioned in substrate **11**. so that the first opening **29** is provided within the area **14** bounded by adhesive **15** on first surface **12**. In further preferred embodiments, substrate **11** further comprises a second port **20** that transverses the substrate from first surface **12** to second surface **13** and forms first and second openings **31** and **32** on said first and second surfaces, respectively. Second port **20** serves as an outlet port and is positioned in substrate **11** so that the first opening **31** opens within area **14** bounded by the adhesive **15** on the first surface **12**. The second openings of ports **19** and **20** are covered with a removable and replaceable cover **21**. In preferred embodiments, replaceable cover **21** is a stopper, a gasket, or tape, most preferably foil tape.

[**0048**] Input and output ports **19** and **20** are preferably shaped to accept a plastic pipette tip, most preferably a 10 $\mu$L pipette tip or a 200 $\mu$L pipette tip. In preferred embodiments, input and output ports **19** and **20** are generally in the shape of a truncated cone, as shown in **FIG. 4**, wherein the end of the cone having the smaller diameter forms the first opening of each port **29** and **31**, respectively, and the end of the cone having the larger diameter forms the second opening of each port **30** and **32**, respectively. This shape creates a seal between the pipette tip and the port, enhances visibility of the port for operator accuracy and prevents protrusion of the pipette tip into volume **25**, thereby preventing potential damage to components therein, particularly the flexible, gas permeable layer **16**. In these embodiments, each port preferably has a diameter on second substrate surface **13** of from about 1.0 mm to about 2.0 mm, and a diameter on first substrate surface **12** of from about 0.3 mm to about 0.6 mm. The conical walls of ports **19** and **20** form an angle **54** with the second substrate surface **13**, which is preferably less than 90°. Most preferably, angle **54** is less than or equal to the contact angle **55** of the biological sample fluid **26**. Most preferably, angle **54** is equal to contact angle **55** such that the surface of the fluid in the port is flat. For aqueous solutions, this angle is about 60°. This geometric arrangement provides a port that tends not to leak, but instead wicks

fluid into volume **25** so that the second substrate surface **13** is dry when replaceable cover **21** is applied.

[**0049**] Substrate **11** is fabricated from any solid supporting substance, including but not limited to plastics, metals, ceramics, and glasses. Most preferably, substrate **11** is made from silicon or glass (for accuracy and stiffness), molded plastics (which reduce cost of manufacture and thermal inertia), or ceramics (for the incorporation of microfluidic elements including integrated heating elements). Most preferably, substrate **11** is glass.

[**0050**] Adhesive **15** is prepared using an adhesive suitable for forming a water-tight bond between substrate **11** and flexible, gas permeable layer **16**, including, but not limited to, high temperature acrylics, rubber-based adhesives, and silicone-based adhesives. The shape of adhesive **15** is configured to contain array **17**. Adhesive **15** can be deposited on first substrate surface **12** in a pattern to produce area **14** in any desired shape, and is most preferably deposited to define an ellipsoidal area **14**. Adhesive **15** can be deposited using inkjet printing or offset printing methods, or by die cutting the desired shapes from a sheet of adhesive material. In addition, a substantial portion of first surface **12** can be covered with adhesive and portions of the substrate which are not desired to retain adhesive properties can be hardened preferentially, for example, by ultraviolet curing. In these embodiments, portions retaining adhesive properties can be defined using a mask and thereby retain adhesive properties necessary to affix flexible, gas permeable layer **16** to surface **12**. In embodiments using the die cut adhesive material, the adhesive material is preferably a double sided adhesive tape, and more preferably a double sided adhesive tape having no carrier. Adhesive **15** is most preferably set down in a layer between 1 and 100 $\mu$m thick, more preferably between 25 and 75 $\mu$m thick, and most preferably about 50 $\mu$m thick.

[**0051**] Flexible, gas permeable layer **16** preferably covers an area of from about 5 $mm^2$ to about 1400 $mm^2$, more preferably from about 5 $mm^2$ to about 600 $mm^2$, and most preferably from about 100 $mm^2$ to about 600 $mm^2$. Flexible, gas permeable layer **16** is made of any flexible solid substance, including but not limited to plastics, including polypropylene, polyethylene, and polyvinylidene chloride (sold commercially as Saran® wrap) plastics, rubbers, including silicone rubbers, high temperature polyesters, and porous Teflon®. Flexible, gas permeable layer **16** is preferably deformable, porous, and biocompatible. Flexible, gas permeable layer **16** also preferably impermeable to liquids in order to prevent evaporation of water from the volume contained between the flexible, gas permeable layer and the substrate. Most preferably, flexible, gas permeable layer **16** is selected to have physical, chemical and mechanical properties such that the surface tension of sample fluid **26** prevents passage of the sample fluid through the pores of the membrane, while allowing passage of gas molecules across the flexible, gas permeable layer. Preferably, the pore size of flexible, gas permeable layer **16** is between 0.2 and 3.0 $\mu$m, more preferably between 0.2 and 1 $\mu$m, and most preferably about 0.2 $\mu$m. Flexible, gas permeable layer **16** also preferably is translucent and should be able to withstand temperatures of between 50° C. and 95° C. for a period of between 8 and 12 hours without shrinkage. In a preferred embodiment, the flexible, gas permeable layer is porous Teflon®. Membranes having these characteristics are available from Pall Specialty Materials.

[**0052**] In preferred embodiments, as shown in **FIG. 5**, the invention further comprises a label layer **57** which is die cut in the same manner as the adhesive to form windows **58** that correspond in location to areas **14** on first substrate surface **12**. The label layer is preferably a thick film having a layer of adhesive, and most preferably is an Avery laser label. The label layer is applied to the outer surface of the flexible, gas permeable layer, preferably by vacuum lamination. Areas **14** are visible through windows **58** in label layer **57**.

[**0053**] A means for facilitating diffusion across the flexible, gas permeable layer is removably affixed to the flexible, gas permeable layer, or the label layer when present, in order to remove gas bubbles from the reaction chambers. The diffusion-facilitating means creates a pressure gradient or concentration gradient across flexible, gas permeable layer **16**, thereby increasing the rate of diffusion of gas molecules from the sample fluid **26** contained in volume **25** across flexible, gas permeable layer **26**. A preferred embodiment of the diffusion-facilitating means, wherein the diffusion-facilitating means creates a pressure gradient across flexible, gas permeable layer **16**, is shown in **FIG. 6**. In this embodiment, a vacuum source **70** is removably affixed to flexible, gas permeable layer **16**. In preferred embodiments, vacuum source **70** comprises a vacuum pump **71**, a chamber seal **72** that completely surrounds area **14** and is removably affixed to flexible, gas permeable layer **16**, and a length of plastic tubing **73** connecting vacuum pump **71** to reducer **72**. The chamber seal may be a suction cup, a reducer, or any other structure having similar chemical and mechanical properties. Most preferably, the plastic tubing is polyurethane tubing. Most preferably the chamber seal is made of polyvinylidene fluoride (sold under the name Kynar® by Elf Atochem North America).

[**0054**] Diffusion-facilitating means that create a concentration gradient across the membrane are also preferred. Concentration gradients are created, for example, by providing a flow of inert gas across flexible, gas permeable layer **16**, wherein the molecules of the inert gas are too large to pass through flexible, gas permeable layer **16**, while the gas contained in volume **25** passes freely through flexible, gas permeable layer **16**. Those skilled in the art will be able to select the characteristics of flexible, gas permeable layer **16** and diffusion-facilitating means that are appropriate for their selected sample fluid **26**.

[**0055**] Array **17** contained in area **14** on first substrate surface **12** is covered with a water-soluble compound **28**, which protects and seals the biochip prior to use and prevents degradation or other damage to the array. Any water-soluble compound **28** having a melting point of about 30° C. to about 60° C., more preferably of about 35° C. to about 50° C., and most preferably of about 35° C. to about 45° C. is advantageously used in filling volume **25** between array **17** and flexible, gas permeable layer **16**. Preferably, the compound is polyethylene glycol, most preferably polyethylene glycol **600**. It is a particularly preferred feature of reaction apparatus **10** of the invention that water-soluble compound **28** fills the entirety of the volume **25** and more preferably also fills at least a portion of input port **19**. This inhibits formation of air bubbles in volume **25** because compound **28** is first melted, then carefully mixed with sample fluid **26** within volume **25** using a roller **40** without producing air bubbles in sample fluid **26**. The lack of air bubbles in volume **25** enhances efficiency of the biological

reaction by ensuring that interactions, such as hybridization, between the target molecules in the sample and probe molecules comprising the array **17** or gel pads of biochip **18** are capable of proceeding without interference from such air bubbles.

[**0056**] Alternative embodiments of the reaction apparatus **10** of the invention encompass a multiplicity of arrays **17** confined in a multiplicity of areas **14** underneath flexible, gas permeable layer **16**, each area comprising an array **17** and being supplied with first port **19** and, optionally, second port **20**. In these embodiments, adhesive **15** is deposited on first substrate surface **12** in a pattern that defines each of areas **14**, and flexible, gas permeable layer **16** is applied to adhesive **15** to encompass areas **14** on said surface.

[**0057**] In certain embodiments of the invention, reaction apparatus **10** is produced containing array **17** or a multiplicity of arrays **17** as disclosed herein, wherein the chamber is provided ready-to-use by the addition of sample fluid **26** comprising one or a multiplicity of target molecules. In alternative embodiments, reaction apparatus **10** is provided without array **17**, and permits insertion thereof by a user. In these embodiments, at least one edge of flexible, gas permeable layer **16** is not adhered to first substrate surface **12** until array **17** is inserted.

[**0058**] In the use of the reaction apparatus **10** of the invention, an amount of a sample fluid **26**, most preferably comprising a biological sample containing a target molecule, is added to the reaction chamber through first port **19**. Before application of the sample fluid **26** to the chamber, volume **25** is most preferably heated to a temperature greater than or equal to the melting temperature of water-soluble compound **28**. When melted, sample fluid **26** can be added to the chamber and mixed with the water-soluble compound, as shown in **FIG. 1B**. Preferably, water-soluble compound **28** does not adversely affect the reaction taking place in the chamber. More preferably, the amount of compound **28** is chosen such that the efficiency of the biological reaction is improved when compound **28** is mixed with sample fluid **26**.

[**0059**] In embodiments of the chamber comprising first port **19** but not second port **20**, the sample fluid is preferably introduced into the chamber after compound **28** is melted, and then the fluid is cycled into and out of the chamber, most preferably using a pipette, until fluid **26** and compound **28** are fully mixed, and the sample fluid evenly distributed over the surface of array **17**, or mixed into gel pads **22** comprising certain embodiments of said arrays. Alternatively, sample fluid **26** is evenly distributed over the surface of array **17**, or mixed into gel pads **22** by physically manipulating flexible, gas permeable layer **16**, as more fully described below. In these embodiments, sample fluid **26** is removed after the reaction is completed, and array **17** is washed by the cycling a sufficient volume of a wash solution **27** into and out of the chamber, most preferably using a pipette.

[**0060**] In embodiments of the chamber comprising both first port **19** and second port **20**, the sample fluid is preferably introduced into the chamber after compound **28** is melted, and then the fluid is cycled into and out of the chamber, most preferably using at least one pipette, until fluid **26** and compound **28** are fully mixed, and the sample fluid evenly distributed over the surface of array **17**, or mixed into gel pads **22** comprising certain embodiments of said biochips. Sample fluid **26** is removed after the reaction has been completed using outlet port **20**, and the biochip washed by the addition and cycling of a sufficient volume of a wash solution **27** into and out of the chamber, most preferably using a pipette. In these embodiments, the wash solution can also be continuously provided by addition through the input port and removal through the output port. In certain embodiments, biochip **18** containing array **17** is removed from the chamber for development or further manipulations as required.

[**0061**] Prior to commencing the reaction, the reaction apparatus **10** is degassed using vacuum source **70**. Preferably a vacuum of between 13 and 27 kPa (100 to 200 torr), more preferably a vacuum of between 13 and 20 kPa (100 to 150 torr), and most preferably a vacuum of about 13 kPa (100 torr) is applied. Preferably the vacuum is applied for between 10 seconds and 2 minutes, more preferably between 10 seconds and 1 minute, most preferably between 10 seconds and 30 seconds. Vacuum source **70** is then detached from flexible, gas permeable layer **16**, and volume **25** is visually inspected for the presence of gas bubbles.

[**0062**] The Examples that follow are illustrative of specific embodiments of the invention and various uses thereof. They are set forth for explanatory purposes only, and are not to be taken as limiting the invention.

## EXAMPLE 1

[**0063**] Removing Gas Bubbles from of a Reaction Chamber

[**0064**] The process of assembling a chamber according to the present invention is illustrated in **FIG. 7**.

[**0065**] A four reaction-chamber apparatus is manufactured using a layer of 0.2 $\mu$m porous Teflon unsupported membrane as the flexible, gas permeable layer, following the procedure provided in U.S. application Ser. No. 09/464,490, incorporated by reference herein. Each reaction chamber is filled with 75 $\mu$L of a sample fluid containing biological target molecules by injection through a 300 $\mu$L pipette tip (VWR Part No. 53510-084) using a 200 $\mu$L pipettor (Rainin P-200). Bubbles are visually detectable in the chambers after injection.

[**0066**] A reaction chamber is isolated by applying a Cole-Parmer Kynar ¼"×⅝" barbed reducer (Part No. 31513-31) directly to the frame layer and forming a seal around the chamber. A "house" vacuum source is connected to the reducer by a length of polyurethane tubing. A vacuum of 200 torr is applied for two minutes. Visual inspection of the chamber following application of the vacuum shows no gas bubbles remaining in the chamber.

[**0067**] The reaction apparatus is maintained at 25° C. and atmospheric pressure for 8 hours until the reaction proceeds to completion. No appreciable evaporation of water from the chamber is observed.

[**0068**] It should be understood that the foregoing disclosure emphasizes certain specific embodiments of the invention and that all modifications or alternatives equivalent thereto are within the spirit and scope of the invention as set forth in the appended claims.

What we claim is:

**1**. An apparatus for performing biological reactions, comprising:

(a) a substrate having a first surface and a second surface opposite thereto,

(b) an array of biomolecules positioned on the first surface of the substrate,

(c) a flexible, gas permeable layer affixed to the first surface of the substrate by an adhesive, wherein the adhesive is deposited on the first surface of the substrate and encloses an area thereupon, and wherein the flexible, gas permeable layer, the adhesive, and the first substrate surface enclose a reaction chamber;

(d) a port extending through the substrate from the first surface to the second surface thereof and having a first opening and a second opening, wherein the first opening of the port is provided within the area bounded by the adhesive and covered by the flexible, gas permeable layer and the second opening of the port is provided on the second surface of the substrate;

(e) a removable cover positioned over the second opening of the port;

(f) a layer of a water-soluble compound that is a solid at a first temperature and a liquid at a second, higher temperature, the layer being positioned in the reaction chamber between the first surface of the substrate and the flexible, gas permeable layer; and

(g) a means for facilitating diffusion of gas bubbles across the flexible, gas permeable layer, wherein the diffusion-facilitating means creates a pressure gradient or concentration gradient across the flexible, gas permeable layer thereby increasing the rate of diffusion of gas bubbles from the reaction chamber across the flexible, gas permeable layer.

**2**. The apparatus of claim 1, wherein the flexible, gas permeable layer is a porous membrane.

**3**. The apparatus of claim 2, wherein the porous membrane is porous Teflon.

**4**. The apparatus of claim 2, wherein, when the reaction chamber contains a fluid sample, the porous membrane prevents the sample fluid from passing through the membrane.

**5**. The apparatus of claim 1, wherein the means for facilitating diffusion of gas bubbles across the flexible, gas permeable layer comprises a vacuum source removably affixed to the flexible, gas permeable layer, and wherein the vacuum source is used to create a pressure gradient across the flexible, gas permeable layer to facilitate diffusion of gas bubbles from the reaction chamber across the flexible, gas permeable layer.

**6**. The apparatus of claim 5, wherein the vacuum source comprises:

(a) a vacuum pump, and

(b) a chamber seal removably affixed to the flexible, gas permeable layer and removably connected to the vaccum pump, wherein the seal completely surrounds the area on the first substrate surface containing the array of biomolecules.

**7**. A method for removing gas bubbles from an apparatus for performing biological reactions having one or more reaction chambers bounded by a substrate layer, an adhesive and a flexible, gas permeable layer, comprising the steps of:

(a) attaching to the flexible, gas permeable layer a means for facilitating diffusion of gas molecules across the flexible, gas permeable layer, and

(b) operating the diffusion-facilitating means until the gas bubbles are removed from the reaction chamber.

**8**. A method for removing gas bubbles from an apparatus for performing biological reactions having one or more reaction chambers bounded by a substrate layer, an adhesive and a flexible, gas permeable layer, comprising the steps of:

(a) isolating a reaction chamber of the apparatus by applying a reducer to the flexible, gas permeable layer surrounding the reaction chamber, thereby forming a seal between the reducer and the flexible, gas permeable layer,

(b) attaching a vacuum source to the reducer, and

(c) applying a vacuum to the reaction chamber until the gas bubbles are removed from the reaction chamber.

**9**. In an apparatus for performing biological reactions, comprising a substrate having a first surface and a second surface opposite thereto, an array of biomolecules positioned on the first surface of the substrate, a flexible layer affixed to the first surface of the substrate by an adhesive, wherein the adhesive is deposited on the first surface of the substrate and encloses an area thereupon; a reaction chamber enclosed by the flexible layer, the adhesive and the first substrate surface; a port extending through the substrate from the first surface to the second surface thereof and having a first opening and a second opening, wherein the first opening of the port is provided within the area bounded by the adhesive and covered by the flexible layer and the second opening of the port is provided on the second surface of the substrate; a removable cover positioned over the second opening of the port; and a layer of a water-soluble compound that is a solid at a first temperature and a liquid at a second, higher temperature, the layer being positioned between the first surface of the substrate and the flexible layer, the improvement comprising

(a) a flexible layer that is a gas permeable layer and

(b) a means for facilitating diffusion of gas bubbles across the flexible, gas permeable layer, wherein the diffusion-facilitating means creates a pressure gradient or concentration gradient across the flexible, gas permeable layer such that gas bubbles diffuse from the reaction chamber to the environment outside the flexible, gas permeable layer.

**10**. The improvement of claim 9, wherein the diffusion-facilitating means comprises a vacuum source removably affixed to the flexible, gas permeable layer and wherein the vacuum source is used to apply a vacuum to the flexible, gas permeable layer to remove gas bubbles from the reaction chamber.

* * * * *