US 20030190182A1

(19) **United States**

(12) **Patent Application Publication**

(10) **Pub. No.: US 2003/0190182 A1**

(43) **Pub. Date: Oct. 9, 2003**

Huang

(54) **ERGONOMIC KEYBOARD**

(75) Inventor: **Chou-Nan Huang**, Tainan (TW)

Correspondence Address:
QUINTERO LAW OFFICE
1617 BROADWAY, 3RD FLOOR
SANTA MONICA, CA 90404 (US)

(73) Assignee: **Darfon Electronics Corp.**

(21) Appl. No.: **10/406,472**

(22) Filed: **Apr. 3, 2003**

(30) **Foreign Application Priority Data**

Apr. 8, 2002 (TW)..... 91204520

Publication Classification

(51) **Int. Cl.**[7] **B41J 5/10**

(52) **U.S. Cl.** **400/490**

(57) **ABSTRACT**

An ergonomic keyboard. The keyboard includes a main body and first, second and third key groups disposed thereon. The third key group is arranged between the first key group and the second key group. The top surfaces of the keys of the first key group and the second key group are inclined to the third key group by a first angle, such that the keyboard can be more ergonomically sound.

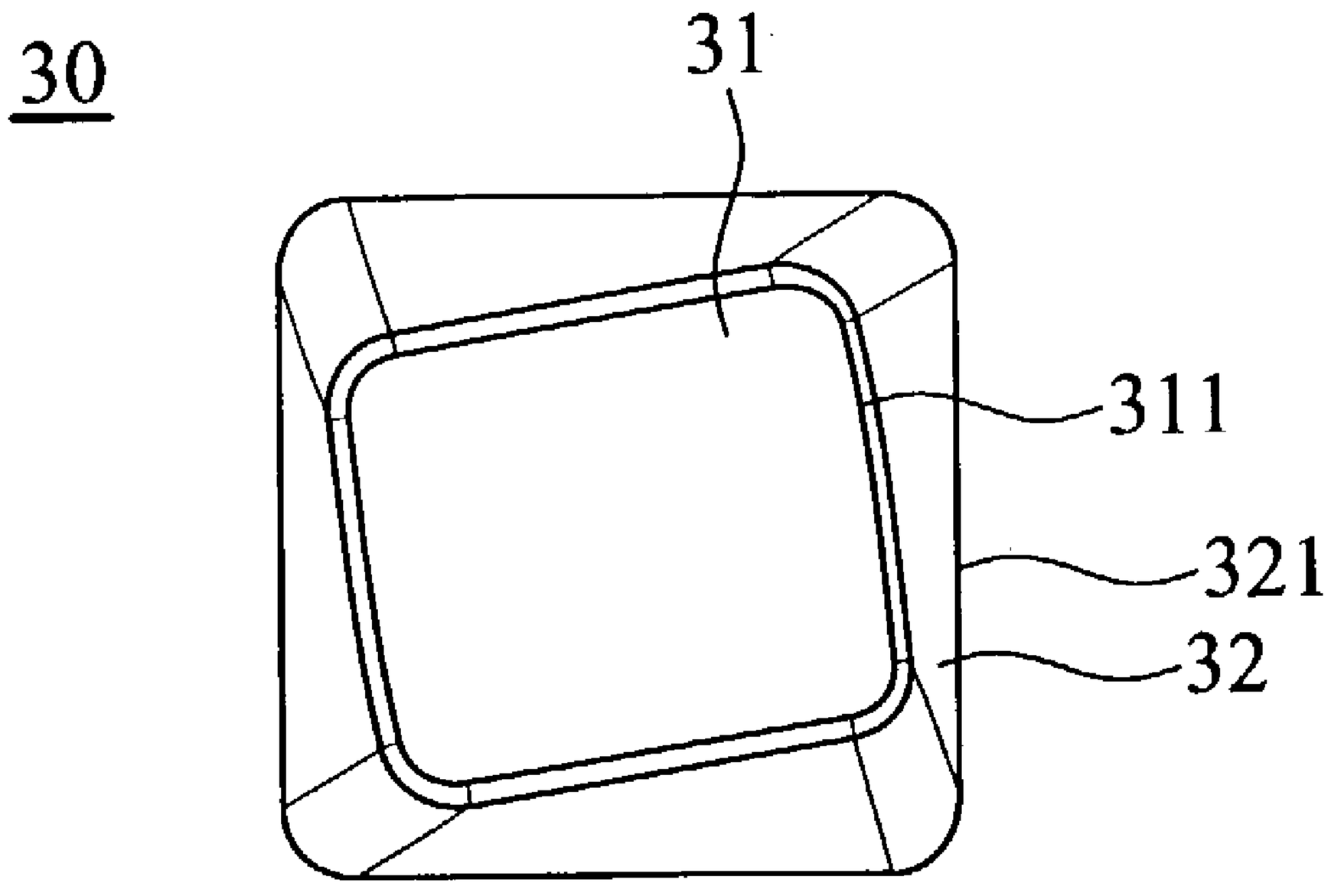

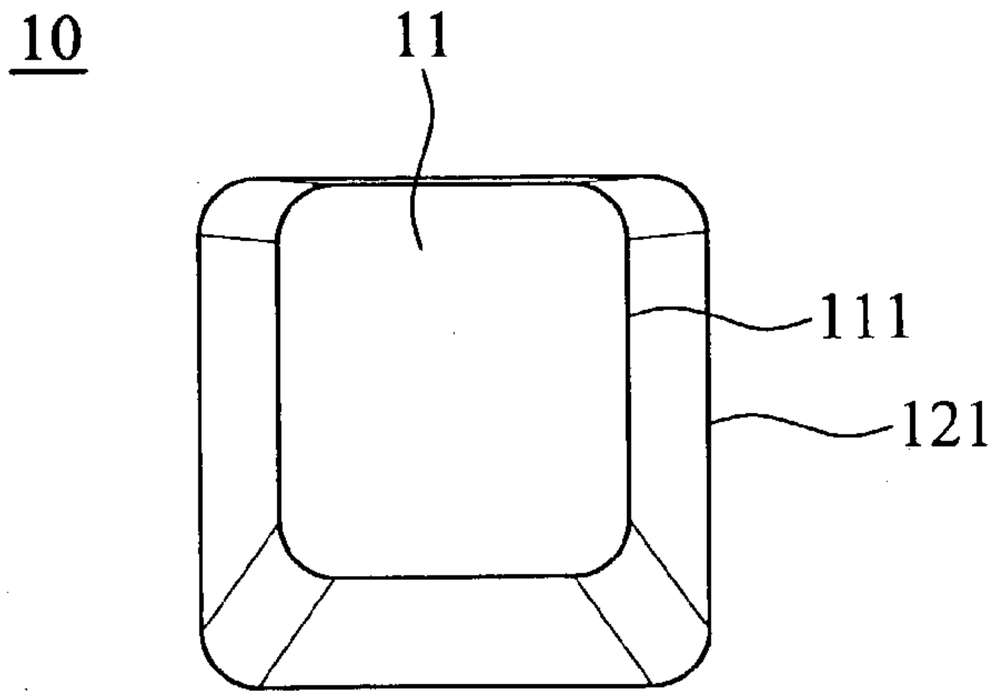

FIG. 1A

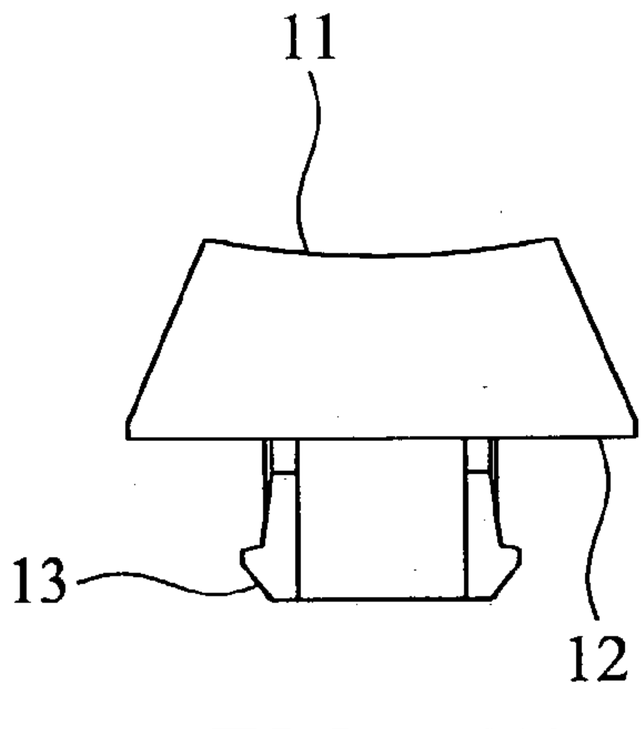

FIG. 1B

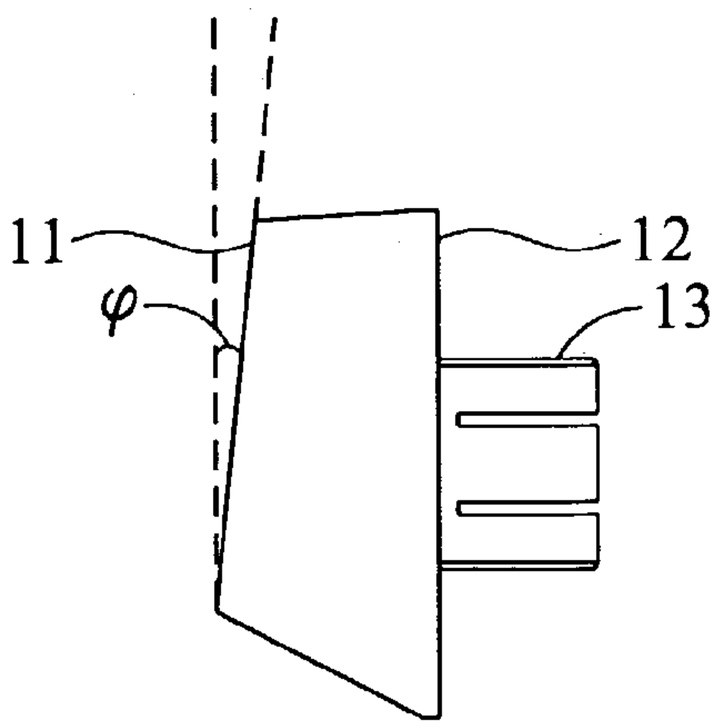

FIG. 1C

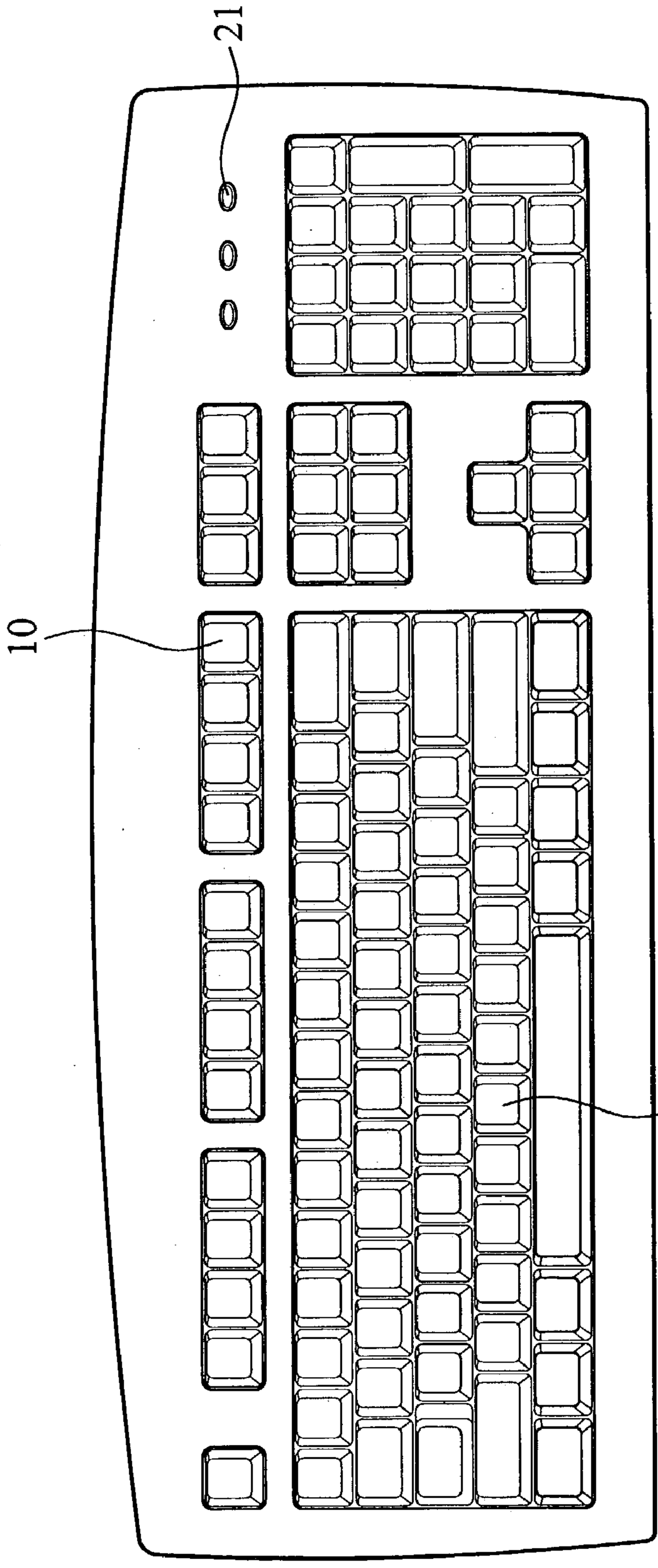

FIG. 2

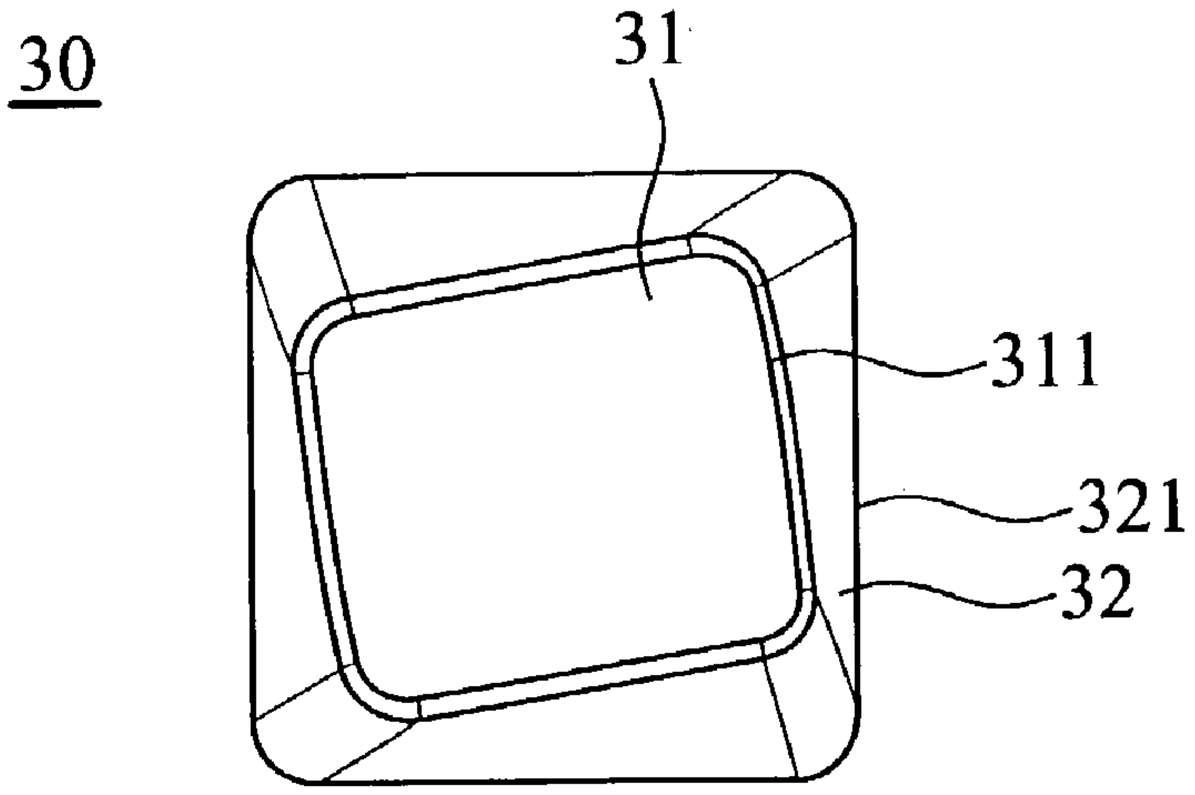

FIG. 3A

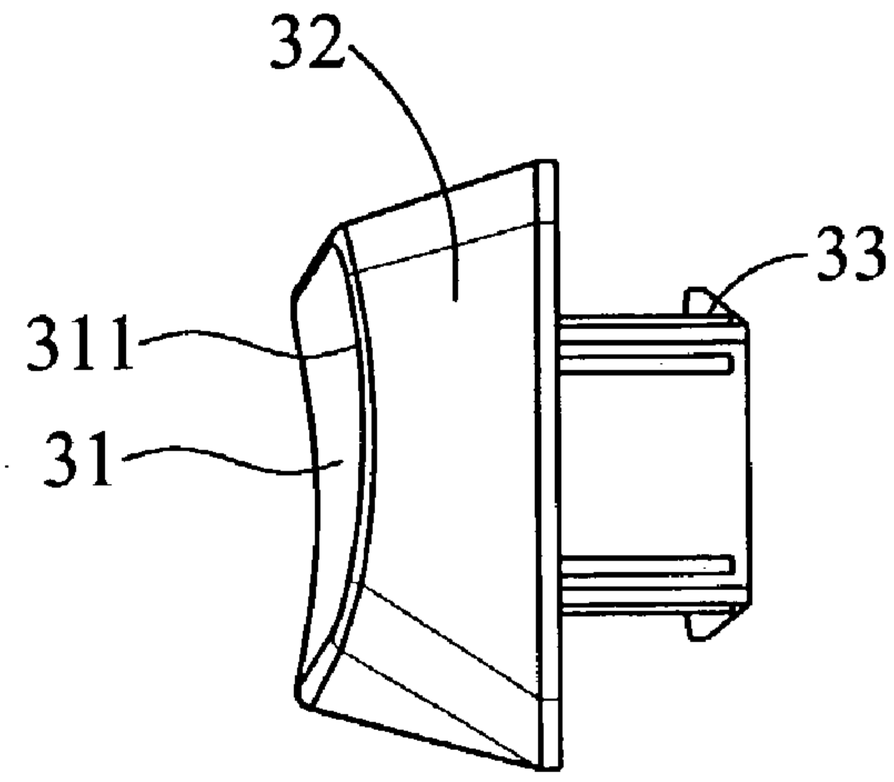

FIG. 3B

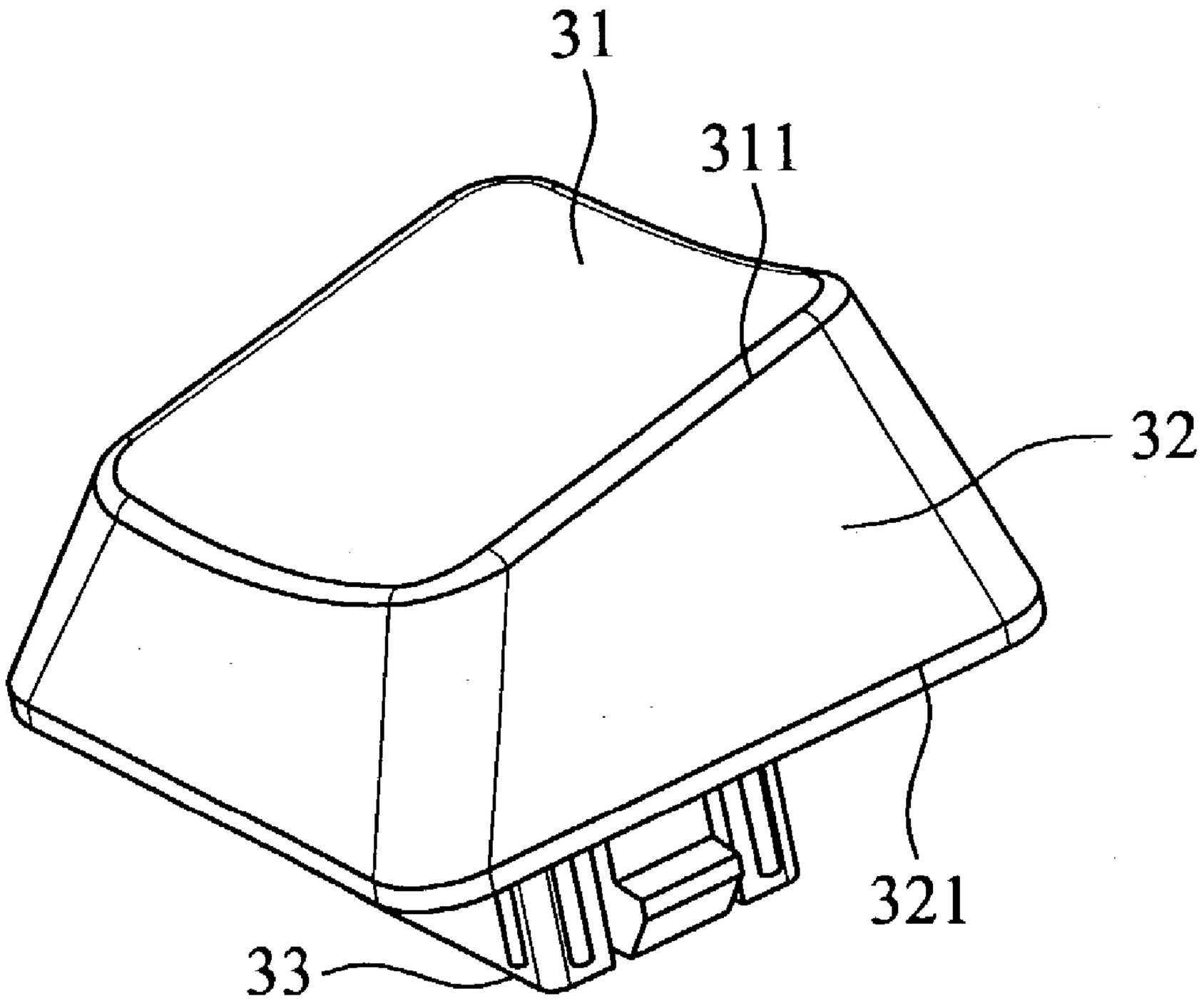

FIG. 3C

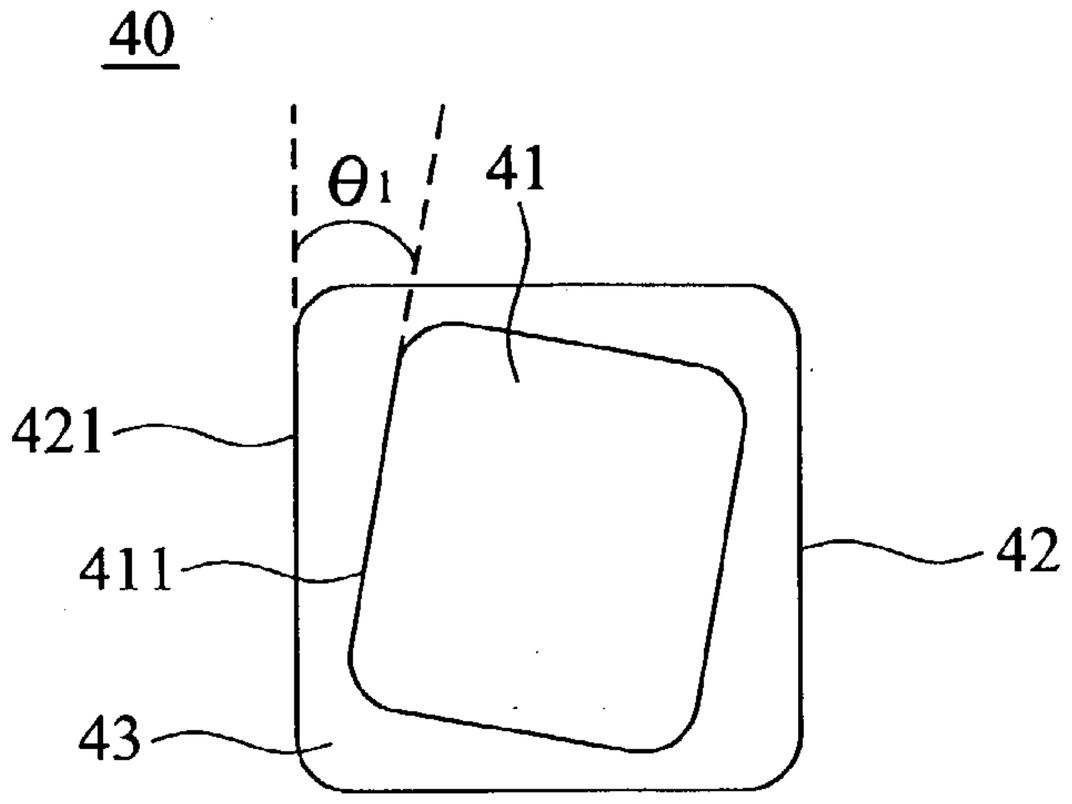

FIG. 4A

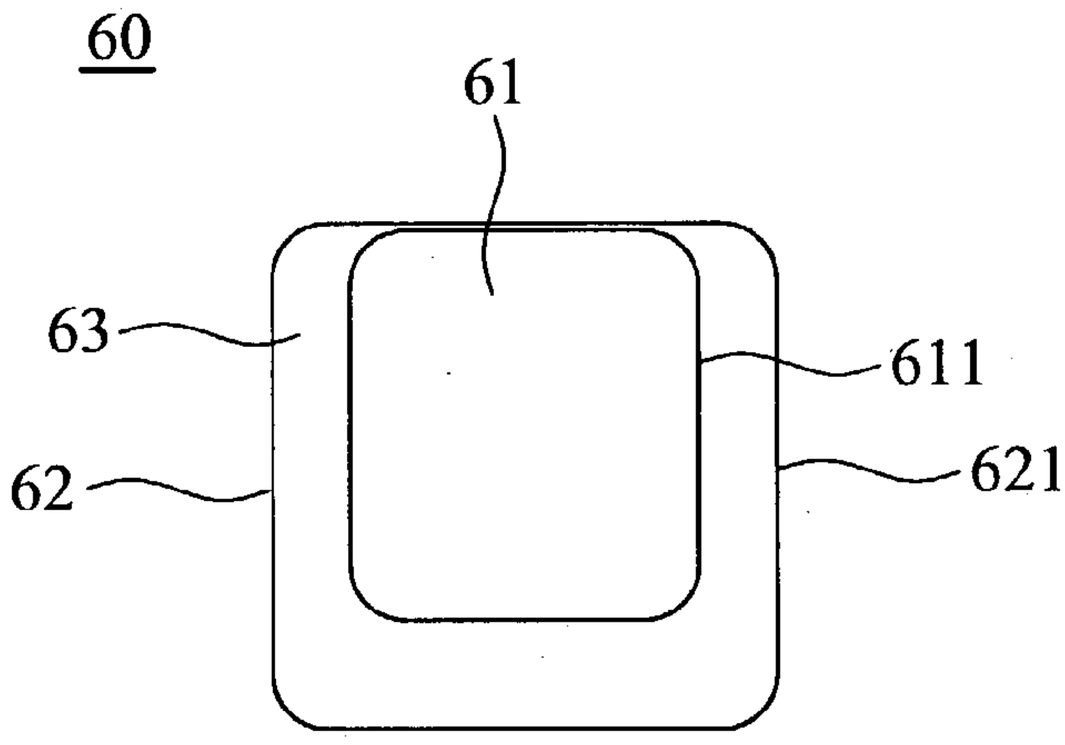

FIG. 4B

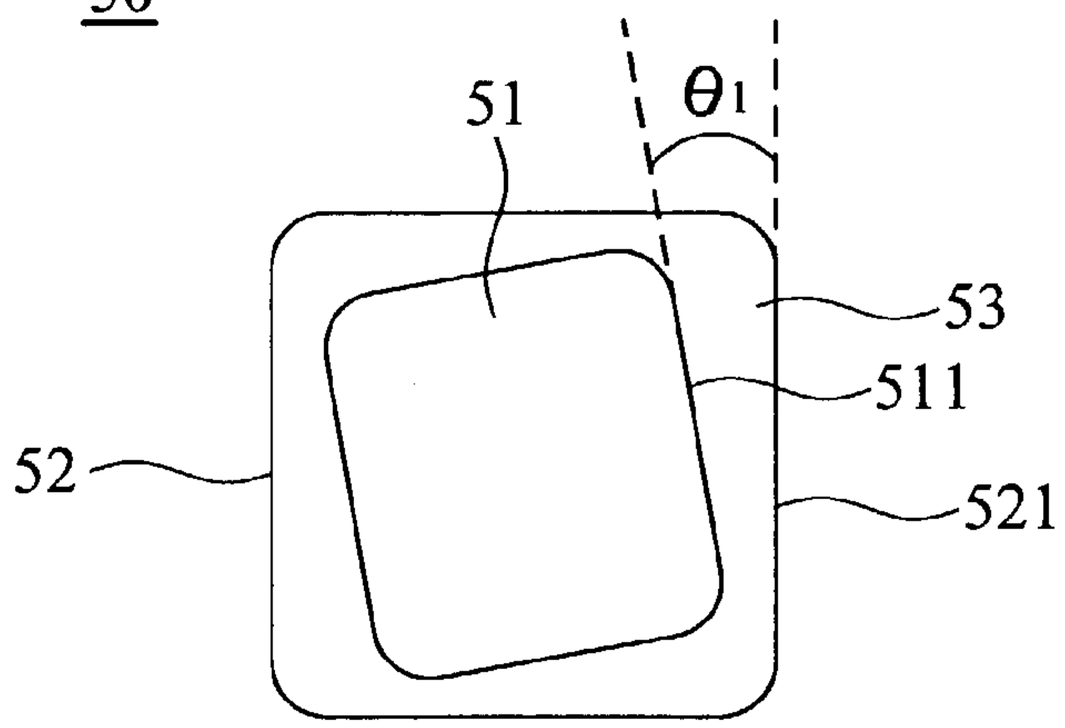

FIG. 4C

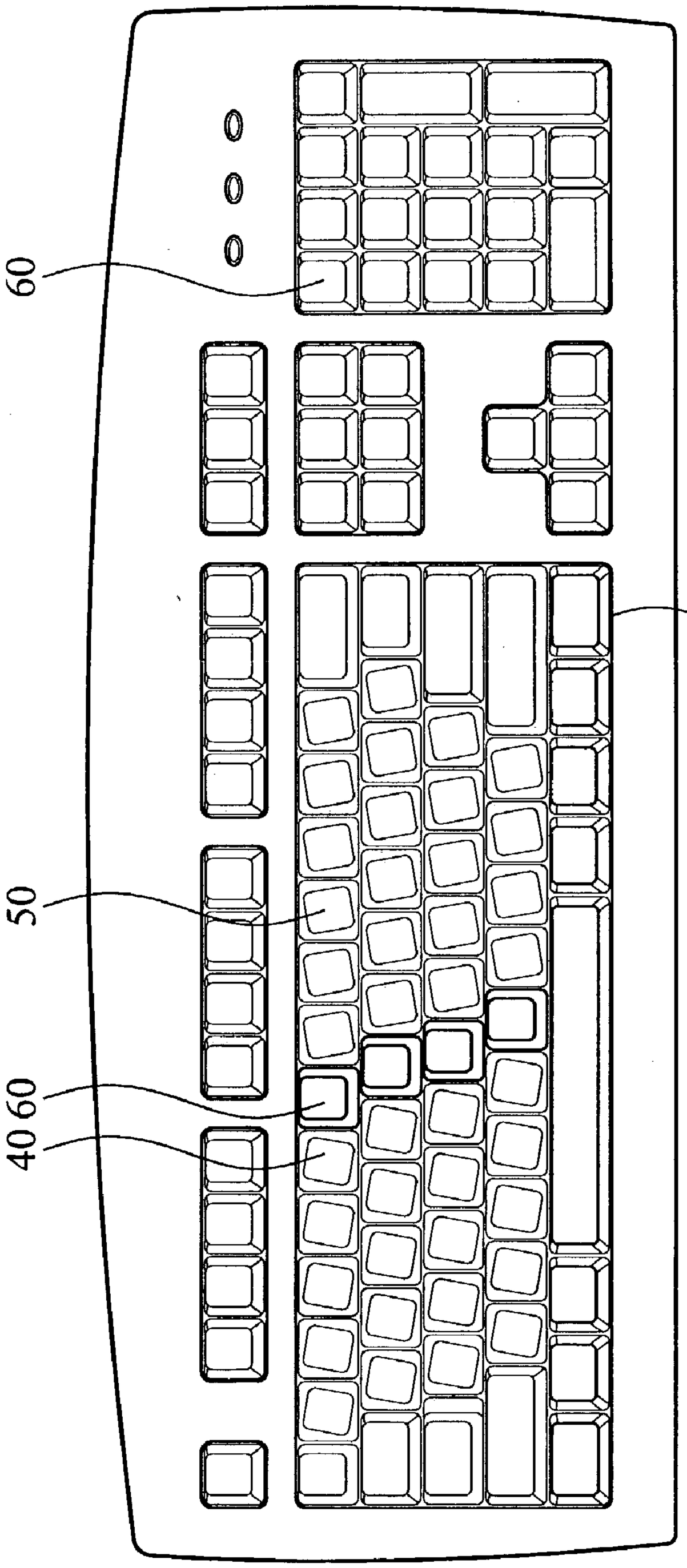

FIG. 4D

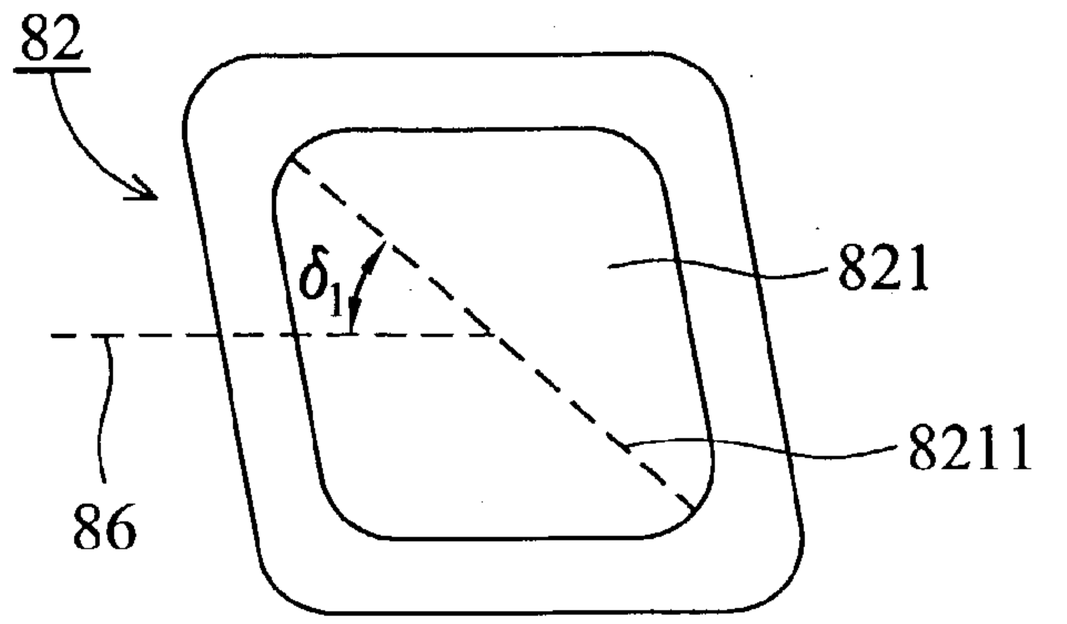

FIG. 5A

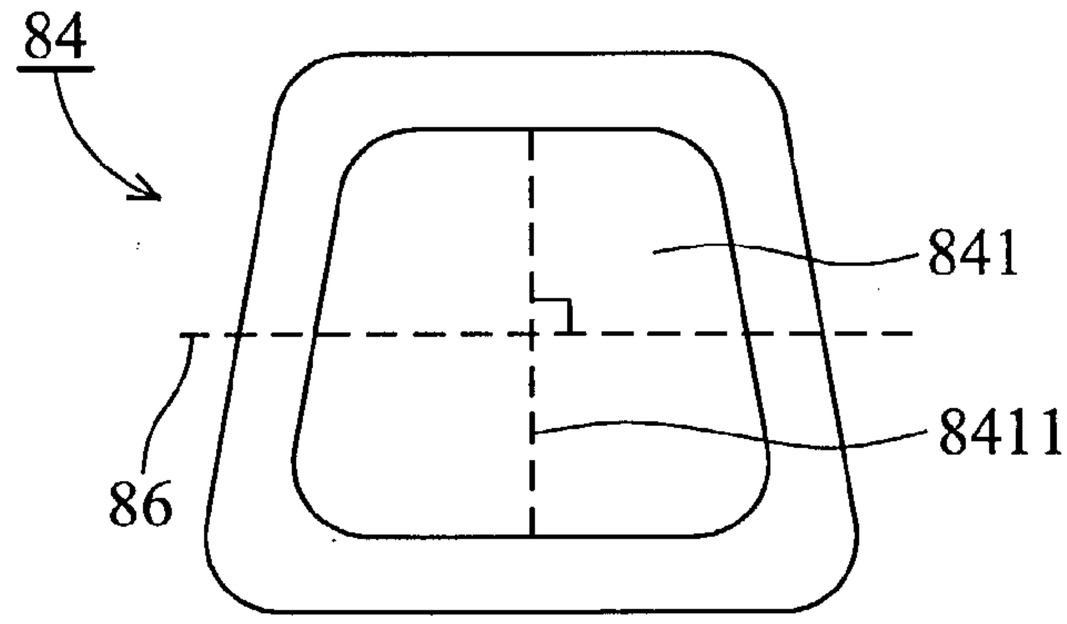

FIG. 5B

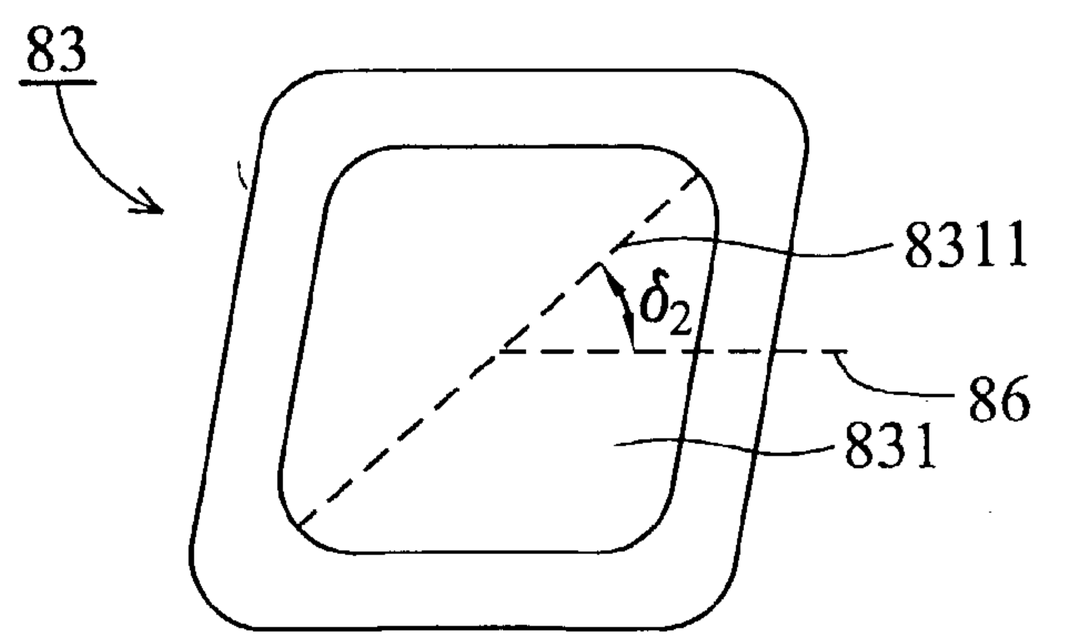

FIG. 5C

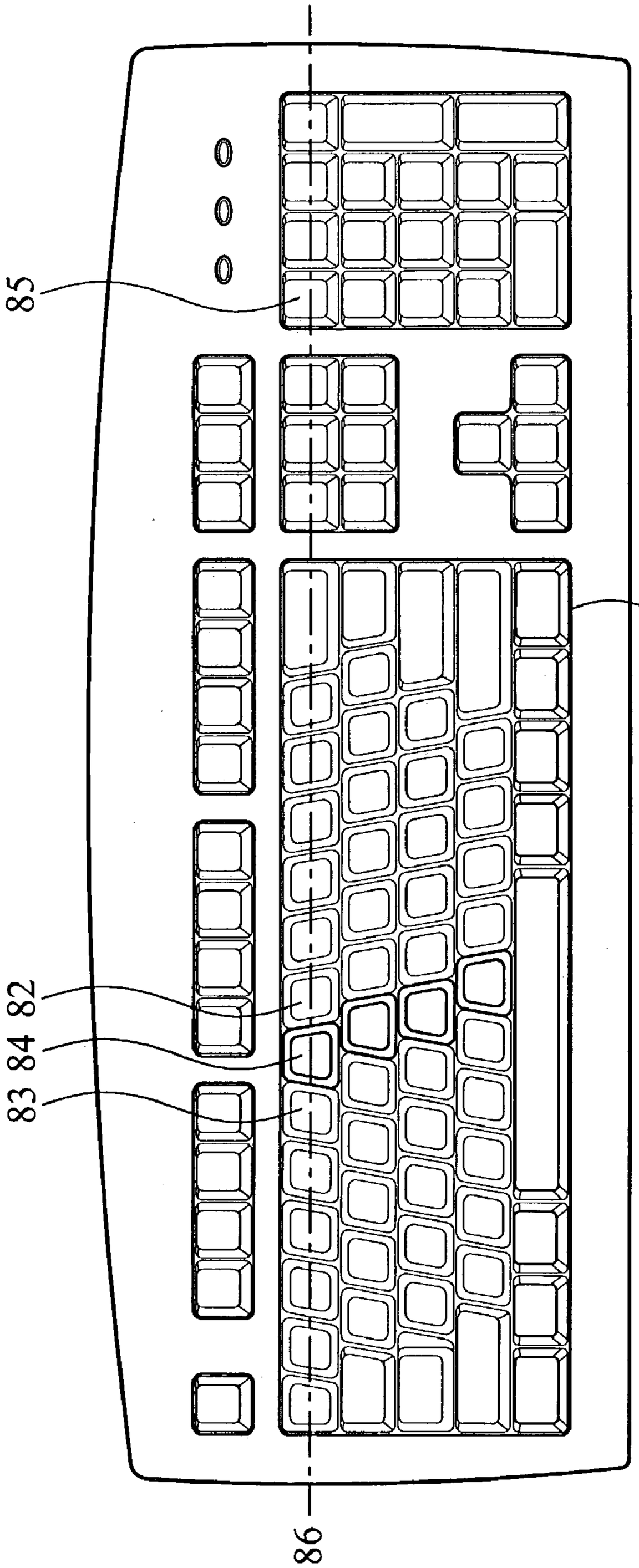

FIG. 5D

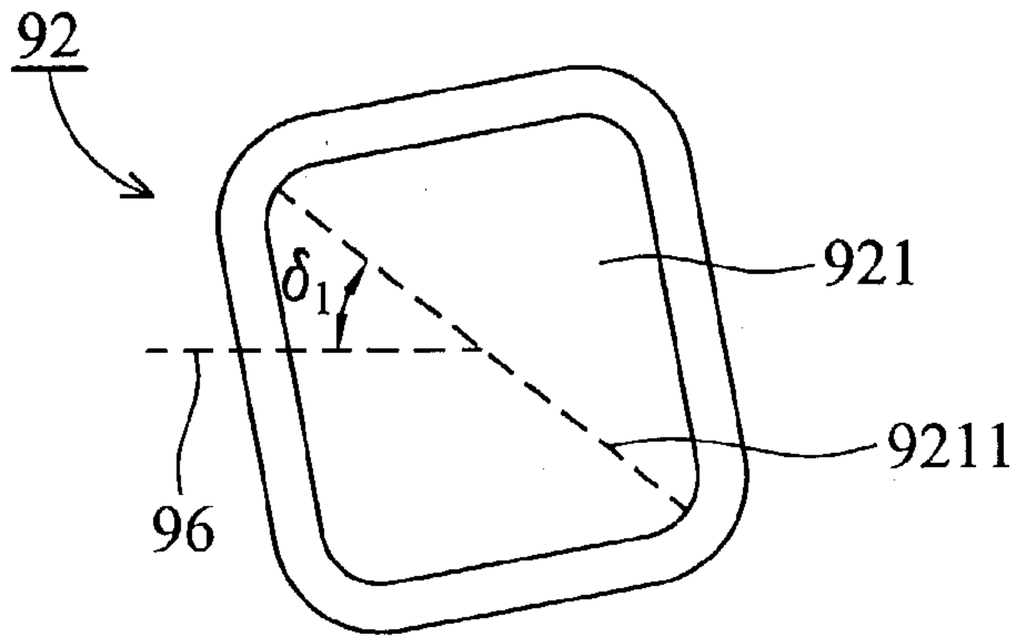

FIG. 6A

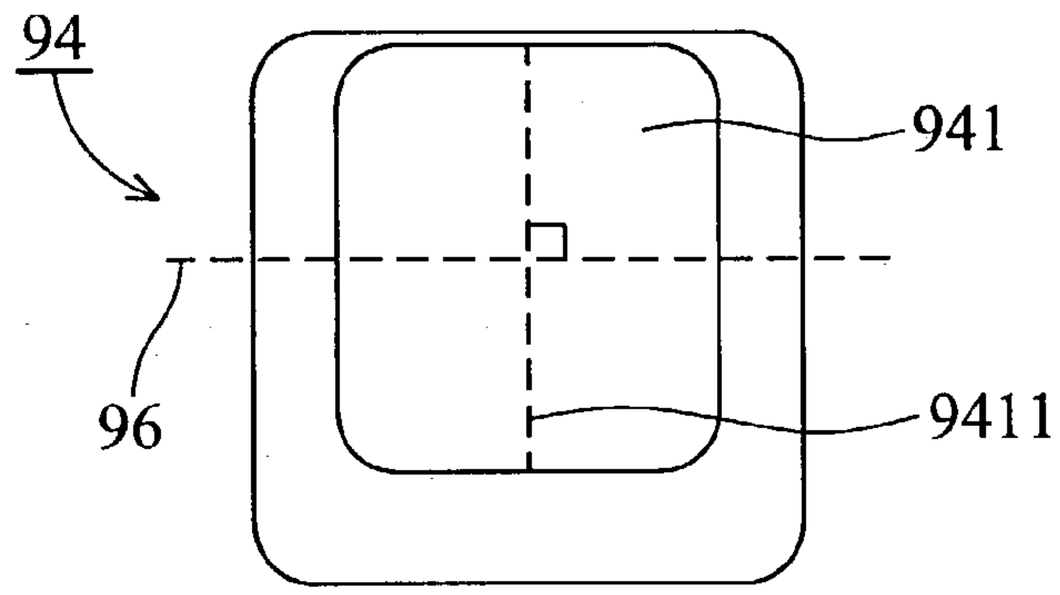

FIG. 6B

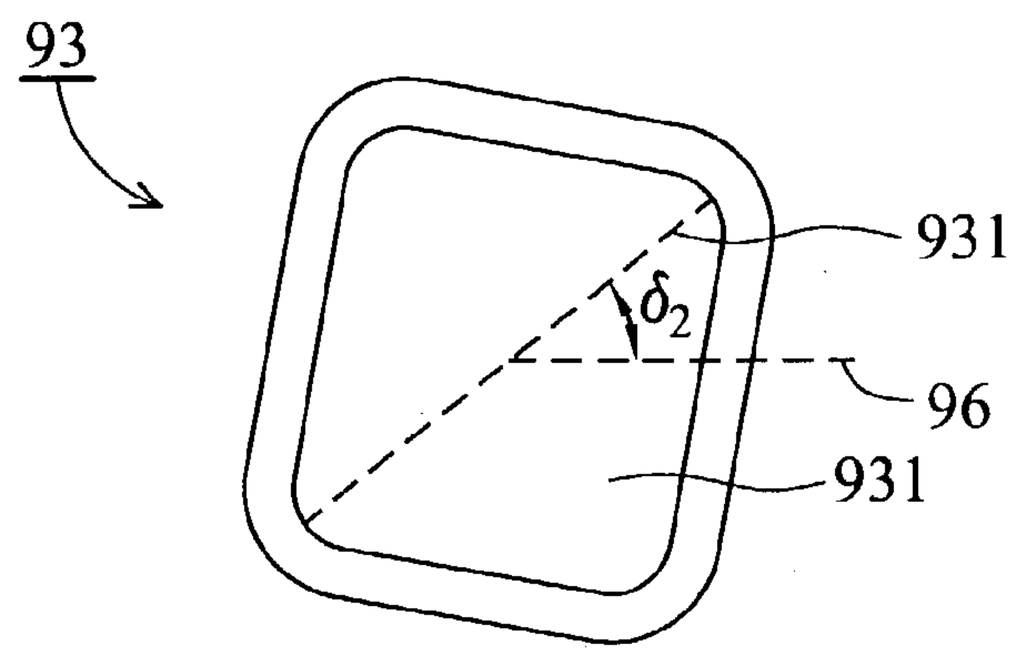

FIG. 6C

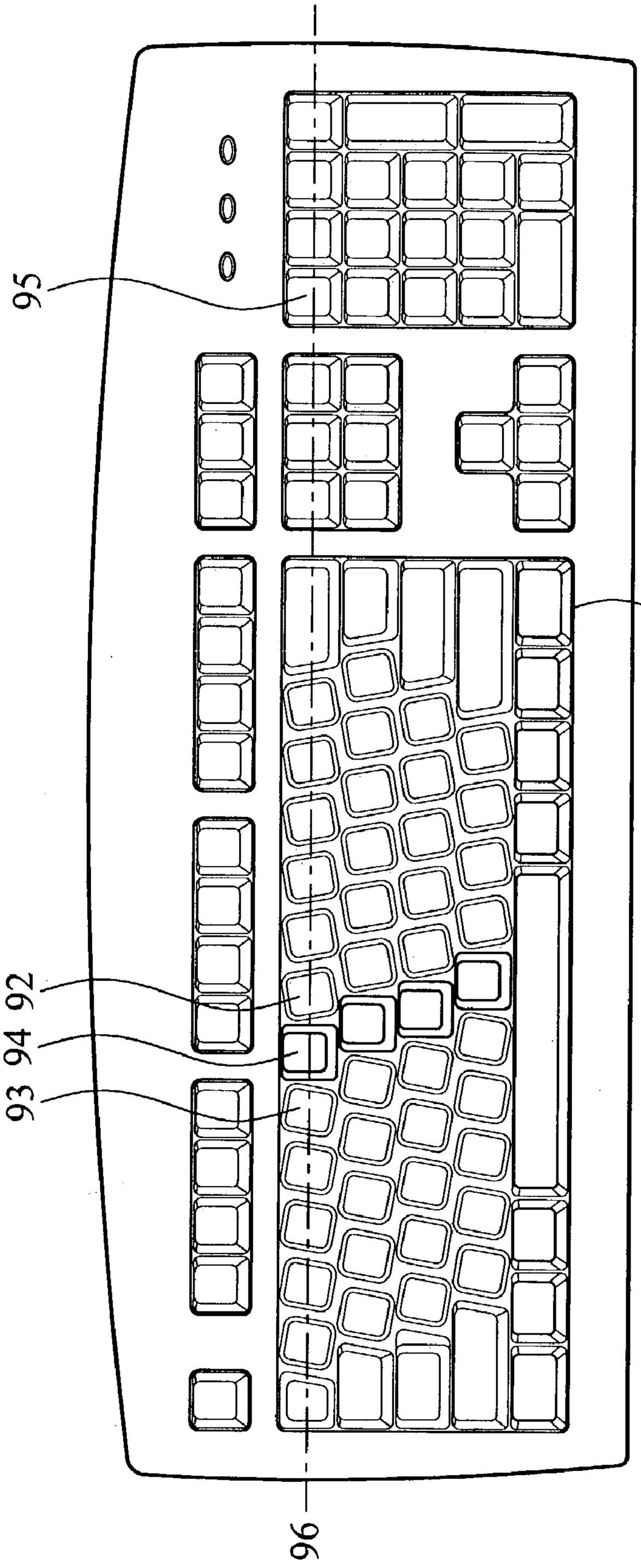

FIG. 6D

ERGONOMIC KEYBOARD

BACKGROUND OF THE INVENTION

[0001] 1. Field of the Invention

[0002] The present invention relates to a keyboard, and in particular to an ergonomic keyboard with more comfortably angled key caps.

[0003] 2. Description of the Related Art

[0004] FIGS. 1A~1C show a key of a conventional keyboard shown in **FIG. 2**. In FIGS. 1A~1C, the key **10** of the conventional keyboard **20** includes a key cap and a connection portion **13** extending from the bottom of the key cap. The key cap has a top surface **11** with top edges **111** and a plurality of second side surfaces with bottom edges **121**. Each of the top edges **111** is parallel to the bottom edge **121** of the same second side surface. In order to satisfy the ergonomics and make users more comfortable when typing, the top surfaces **11** of the key caps of the conventional keyboard are cambered surfaces and have a forward inclined angle T with respect to the horizontal plane. The keys **10** are movably disposed on the conventional keyboard **20** as shown in **FIG. 2**.

[0005] While the keys of the conventional keyboard can have several ergonomic designs, the hands of a user when typing are not parallel, but, rather, form an angle. The conventional keyboard is therefore not as comfortable during use as it might be. Hence, there is a need for a more comfortably used keyboard with improved key structure to satisfy ergonomics.

SUMMARY OF THE INVENTION

[0006] Accordingly, an object of the invention is to provide a keyboard with improved key structure that is more comfortably used than conventional keyboards.

[0007] The present invention provides an ergonomic keyboard and the key structure thereof. The keyboard includes a main body and a first key group. The first key group has a plurality of first keys with a first key cap and a first connection portion. The first keys are movably connected to the main body through the first connection portions. Each of the first key caps has a first top surface with a plurality of first top edges and a plurality of first side surfaces extending from the first top edges. The bottom edges form a first bottom surface. The projection of each of the first top edges on the first bottom surface is inclined clockwise to the first bottom edge of the same first side surface by an included angle.

[0008] The keyboard of the invention further includes a second key group having a plurality of second keys with a second key cap and a second connection portion. The second keys are movably connected to the main body through the second connection portions. Each of the second key caps has a second top surface with a plurality of second top edges and a plurality of second side surfaces extending from the second top edges. Each of the second side surfaces has a second bottom edge and forming a second bottom surface. The projection of each keyboard of the second top edges on the second bottom surface is inclined counterclockwise to the second bottom edge of the same second side surface by the included angle.

[0009] The keyboard further includes a third key group having a plurality of third keys with a third key cap and a third connection portion. The third keys are movably connected to the main body through the third connection portions and disposed between the first key group and the second key group. The projection of each of the third top edges on the third bottom surface is parallel to the third bottom edge of the same third side surface. The first included angle is less than 30°. The first top surface, the second top surface, and the third top surface are cambered surfaces.

[0010] The present invention also provides another ergonomic keyboard including a main body and a first key group having a plurality of first keys with a first key cap and a first connection portion. The first keys are movably connected to the main body through the first connection portions along a predetermined line. Each of the first key caps has a first top surface with a first symmetrical axis inclined to the predetermined line by a first acute angle.

[0011] Furthermore, the keyboard of the invention further includes a second key group having a plurality of second keys with a second key cap and a second connection portion. The second keys are movably connected to the main body through the second connection portions along the predetermined line. Each of the second key caps has a second top surface with a second symmetrical axes inclined to the predetermined line by a second acute angle.

[0012] Moreover, the keyboard further includes a third key group having a plurality of third keys with a third key cap and a third connection portion. The third keys are movably connected to the main body through the third connection portions along the predetermined line and disposed between the first key group and the second key group. Each of the third symmetrical axes is perpendicular to the predetermined line. The first acute angle and second acute angle are between 30° and 50°. The first top surface, the second top surface, and the third top surface are cambered surfaces.

[0013] A detailed description is given in the following embodiments with reference to the accompanying drawings.

BRIEF DESCRIPTION OF THE DRAWINGS

[0014] The present invention can be more fully understood by reading the subsequent detailed description and examples with references made to the accompanying drawings, wherein:

[0015] FIGS. 1A~1C show a key of a conventional keyboard as referenced in the Prior Art;

[0016] **FIG. 2** is a schematic top view of the conventional keyboard;

[0017] **FIG. 3A** is top view of the key of the invention;

[0018] **FIG. 3B** is side view of the key of the invention;

[0019] **FIG. 3C** is perspective view of the key of the invention;

[0020] FIGS. 4A~4C are schematic views of three kinds of keys shown in **FIG. 4D**;

[0021] **FIG. 4D** is a top view of the ergonomic keyboard of the invention;

[0022] FIGS. 5A~5C are schematic views of three kinds of keys shown in **FIG. 5D**;

[0023] **FIG. 5D** is a top view of the ergonomic keyboard of second embodiment;

[0024] FIGS. **6**A~**6**C are schematic views of three kinds of keys shown in **FIG. 6D**; and

[0025] **FIG. 6D** is a top view of the ergonomic keyboard of third embodiment.

DETAILED DESCRIPTION OF THE INVENTION

[0026] First Embodiment

[0027] FIGS. **3**A~**3**C show a key of the first embodiment of the invention. In FIGS. **3**A~**3**C, the key **30** includes two portions, the key cap and the connection portion **33**. The connection portions **33** extending from the bottom of the key cap connect the key to the keyboard. The key cap has a top surface **31** with a plurality of top edges **311** and a plurality of side surfaces **32** extending from the top edges **31**. Each side surface **32** has a bottom edge **321**, defining a bottom surface according to the enclosed bottom edges **321**. In **FIG. 3**A, the top surface **31** and the bottom surface of the key cap have a similar geometric figure, but the top edges **311** of the top surface **31** are not parallel to the bottom edges **321** of the bottom surface. The top edge **311** and the bottom edge **321** of the same side surface **32** form a first included angle. Moreover, the top surface **31** is a cambered surface as shown in **FIG. 3B**.

[0028] **FIG. 4D** shows an ergonomic keyboard in the first embodiment of the invention. There are three kinds of keys **40**, **50**, **60** disposed on the keyboard **70**. **FIG. 4A** shows a top projection view of a key of the first key group shown in **FIG. 4D**. The first key cap **40** has a first top surface **41** with a plurality of first top edges **411** and a plurality of first side surfaces **43** extending from the first top edges **411**. The bottom edges **421** enclose a first bottom surface **42**. The first top edges **411** of the first top surface **41** are not parallel to the first bottom edges **421** of the defined first bottom surface **42**. The projection of the first top surface **41** is rotated clockwise by an included angle θ_1 with respect to the first bottom surface **42**. That is; the projection of each of the first top edges **411** on the first bottom surface **42** is inclined clockwise to the first bottom edge **421** of the same first side surface **43** by an included angle θ_1.

[0029] **FIG. 4C** shows a top projection view of a key of the second key group shown in **FIG. 4D**. The second key cap **50** has a second top surface **51** with a plurality of second top edges **511** and a plurality of second side surfaces **53** extending from the second top edges **511**. The bottom edges **521** enclose a second bottom surface **52**. The second top edges **511** of the second top surface **51** are not parallel to the second bottom edges **521** of the defined second bottom surface **52**. The projection of the second top surface **51** is counter-rotated clockwise by the included angle θ_1 with respect to the second bottom surface **52**. As well, the projection of each of the second top edges **511** on the second bottom surface **52** is inclined counterclockwise to the second bottom edge **521** of the same second side surface **53** by the included angle θ_1.

[0030] **FIG. 4B** shows a top projection view of a key of the third key group shown in **FIG. 4D**. The third key cap **60** has a third top surface **61** with a plurality of third top edges **611** and a plurality of third side surfaces **63** extending from the third top edges **611**. The bottom edges **621** enclose a third bottom surface **62**. However, the third top edges **611** of the third top surface **61** are parallel to the third bottom edges **621** of the defined third bottom surface **62**, as the key caps of the conventional keyboard.

[0031] In **FIG. 4**D, the keyboard of the first embodiment has a main typing area **71** with three kinds of keys shown in FIGS. **4**A~**4**C for more comfortable use. The first key group, including a plurality of first keys **40**, or clockwise-rotated keys, is disposed on the left side of the main typing area **71**. The second key group, including a plurality of second keys **50**, or counterclockwise-rotated keys, is disposed on the right side of the main typing area **71**. The third key group, including a plurality of third keys **60** as shown in **FIG. 4B** is disposed between the first and second key groups on the main typing area **71**. The keyboard **70** of the first embodiment is more ergonomically sound than conventional keyboards, because the top surfaces of the first and the second keys **40**, **50** tilt to the third keys **60** by the included angle θ_1, which is less than 30° and more comfortably fits the angle between two hands when a user is typing.

[0032] Second Embodiment

[0033] **FIG. 5D** shows another ergonomic keyboard of the invention. There are also three kinds of keys **82**, **83**, **84** disposed on the keyboard **80**. FIGS. **5**A~**5**C are schematic views of three kinds of keys shown in **FIG. 5D**. The first top surface **821** of a first key **82** shown in **FIG. 5A** is a filleted parallelogram with a first symmetrical axis **8211**. The second top surface **831** of a second key **83** shown in **FIG. 5C** is also a filleted parallelogram, opposite to the first key **82**, with a second symmetrical axes **8311**. The third top surface **841** of a third key **84** shown in **FIG. 5B** is a filleted trapezoid with a third symmetrical axis **8411**. The first top surface **821**, the second top surface **831**, and the third top surface **841** are cambered surfaces.

[0034] In **FIG. 5**D, the keyboard of the second embodiment has a main typing area **81** with three kinds of keys shown in FIGS. **5**A~**5**C for more comfortable use. The first key group, including a plurality of first keys **82**, or leftward inclined keys, is disposed on the left side of the main typing area **81**. The first keys **82** of the first key group are movably disposed on the keyboard **80** through the first connection portions (not shown) along a predetermined line **86**. Therefore, each of the first symmetrical axes **8211** is inclined to the predetermined line **86** by a first acute angle δ_1 as in **FIG. 5A**.

[0035] The second key group, including a plurality of second keys **83**, or rightward inclined keys, is disposed on the right side of the main typing area **81**. The second keys **83** of the second key group are movably disposed on the keyboard **80** through the second connection portions (not shown) along the predetermined line **86**. Therefore, each of the second symmetrical axes **8311** is inclined to the predetermined line **86** by a second acute angle δ_2. The first acute angle δ_1 and the second acute angle δ_2 are between 30° and 50°.

[0036] Moreover, the third key group, including a plurality of third keys **84** as shown in **FIG. 5B** is disposed between the first and second key groups on the main typing area **81** as shown in **FIG. 5D**. The third symmetrical axis **8411** is perpendicular to the predetermined line **86**. Hence, the

keyboard **80** of the second embodiment is more ergonomically sound than the conventional keyboard, because the top surfaces of the first and the second key groups tilt to the third key group. This design more comfortably fits the angle of users' hands.

[**0037**] Third Embodiment

[**0038**] **FIG. 6D** shows another ergonomic keyboard of the invention. FIGS. **6**A~**6**C are schematic views of three kinds of keys shown in **FIG. 6D**. In **FIG. 6**D, the keyboard **90** of the third embodiment has a main typing area **91** with three kinds of keys **92**, **93**, **94**, shown in FIGS. **6**A~**6**C, for more comfortable use. The first key group, including a plurality of first keys **92**, or leftward inclined keys, is disposed on the left side of the main typing area **91**. The first top surface **921** of a first key **92** shown in **FIG. 6A** is a filleted square with a first symmetrical axis **9211**. The first keys **92** of the first key group are movably disposed on the keyboard **90** through the first connection portions (not shown) along a predetermined line **96**. Therefore, each of the first symmetrical axes **9211** is inclined to the predetermined line **96** by a first acute angle δ_1.

[**0039**] In **FIG. 6**D, The second key group, including a plurality of second keys **93**, or rightward inclined keys, is disposed on the right side of the main typing area **91**. The second keys **93** of the second key group are movably disposed on the keyboard **90** through the second connection portions (not shown) along the predetermined line **96**. The second top surface **931** of a second key **93** shown in **FIG. 6C** is also a filleted square, opposite to the first key **92**, with a second symmetrical axes **9311**. Therefore, each of the second symmetrical axes **9311** is inclined to the predetermined line **96** by a second acute angle δ_2. Moreover, the first acute angle δ_1 and the second acute angle δ_2 are between 30° and 50°.

[**0040**] The third key group, including a plurality of third keys **94** as shown in **FIG. 6B** is disposed between the first and second key groups on the main typing area **91** as shown in **FIG. 6D**. The third key **94** is the same as a conventional key. The third top surface **941** of the third key **94** has a third symmetrical axis **9411** perpendicular to the predetermined line **96**. Moreover, the first top surface **921**, the second top surface **931**, and the third top surface **941** are cambered surfaces. Thus, the keyboard **90** of the third embodiment is more ergonomically sound than the conventional keyboard, because the top surfaces of the first and the second key groups tilt to the third key group. This design more comfortably fits the angle of users' hands.

[**0041**] While the invention has been described by way of example and in terms of the preferred embodiments, it is to be understood that the invention is not limited to the disclosed embodiments. To the contrary, it is intended to cover various modifications and similar arrangements (as would be apparent to those skilled in the art). Therefore, the scope of the appended claims should be accorded the broadest interpretation so as to encompass all such modifications and similar arrangements.

What is claimed is:

1. A key structure, comprising:

a key cap, having a top surface with a plurality of top edges and a plurality of side surfaces extending from the top edges, each side surface having a bottom edge, the bottom edges forming a bottom surface;

wherein the projection of the top edge on the bottom surface and the bottom edge of the same side surface form a first included angle.

2. The key structure as claimed in claim 1, wherein the first included angle is less than 30°.

3. The key structure as claimed in claim 1, wherein the top surface and the bottom surface of the key cap have a similar geometric figure.

4. The key structure as claimed in claim 1, wherein the top surface is a cambered surface.

5. A keyboard, comprising:

a main body;

a first key group, having a plurality of first keys with a first key cap and a first connection portion, the first keys movably connected to the main body through the first connection portions, each of the first key caps having a first top surface with a plurality of first top edges and a plurality of first side surfaces extending from the first top edges, each of the first side surfaces having a first bottom edge, the first bottom edges forming a first bottom surface; and

wherein the projection of each of the first top edges is inclined clockwise to the first bottom edge of the same first side surface by an included angle.

6. The keyboard as claimed in claim 5, wherein the first included angle is less than 30°.

7. The keyboard as claimed in claim 5, further comprising:

a second key group, having a plurality of second keys with a second key cap and a second connection portion, the second keys movably connected to the main body through the second connection portions, each of the second key caps having a second top surface with a plurality of second top edges and a plurality of second side surfaces extending from the second top edges, each of the second side surfaces having a second bottom edge, and the second bottom edges forming a second bottom surface; and

wherein the projection of each of the second top edges is inclined counterclockwise to the second bottom edge of the same second side surface by the included angle.

8. The keyboard as claimed in claim 7, further comprising:

a third key group, having a plurality of third keys with a third key cap and a third connection portion, the third keys movably connected to the main body through the third connection portions and disposed between the first key group and the second key group, each of the third key caps having a third top surface with a plurality of third top edges and a plurality of third side surfaces extending from the third top edges, each of the third side surfaces having a third bottom edge, and the third bottom edges forming a third bottom surface; and

wherein the projection of each of the third top edges on the third bottom surface is parallel to the third bottom edge of the same third side surface.

9. The keyboard as claimed in claim 8, wherein the first top surface and the first bottom surface, the second top

surface and the second bottom surface, and the third top surface and the third bottom surface have similar geometric figures.

10. The key structure as claimed in claim 5, wherein the first top surface, the second top surface, and the third top surface are cambered surfaces.

11. A keyboard, comprising:

a main body;

a first key group, having a plurality of first keys with a first key cap and a first connection portion, the first keys movably connected to the main body through the first connection portions along a predetermined line, each of the first key caps having a first top surface with a first symmetrical axis; and

wherein each of the first symmetrical axes is inclined to the predetermined line by a first acute angle.

12. The keyboard as claimed in claim 11, further comprising:

a second key group, having a plurality of second keys with a second key cap and a second connection portion, the second keys movably connected to the main body through the second connection portions along the predetermined line, each of the second key caps having a second top surface with a second symmetrical axes; and

wherein each of the second symmetrical axes is inclined to the predetermined line by a second acute angle.

13. The keyboard as claimed in claim 12, further comprising:

a third key group, having a plurality of third keys with a third key cap and a third connection portion, the third keys movably connected to the main body through the third connection portions along the predetermined line and disposed between the first key group and the second key group; and

wherein each of the third symmetrical axis is perpendicular to the predetermined line.

14. The keyboard as claimed in claim 12, wherein the first acute angle and the second acute angle are between 30° and 50°.

15. The key structure as claimed in claim 13, wherein the first top surface, the second top surface, and the third top surface are cambered surfaces.

* * * * *