US 20030008204A1

(19) United States

(12) Patent Application Publication

(10) Pub. No.: US 2003/0008204 A1

(43) Pub. Date: Jan. 9, 2003

Winter et al.

(54) LEAK SENSOR FOR FLOWING ELECTROLYTE BATTERIES

(76) Inventors: **Richard Winter**, San Ramon, CA (US); **Gerd Tomazic**, Murzzuschlag (AT)

Correspondence Address:
FACTOR & PARTNERS, LLC
1327 W. WASHINGTON BLVD.
SUITE 5G/H
CHICAGO, IL 60607 (US)

(21) Appl. No.: 09/997,724

(22) Filed: Nov. 30, 2001

Related U.S. Application Data

(63) Continuation-in-part of application No. 09/899,523, filed on Jul. 5, 2001.

Publication Classification

(51) Int. Cl.[7] H01M 2/38

(52) U.S. Cl. 429/81; 429/61

(57) ABSTRACT

A leak detection system for a flowing electrolyte battery comprises a manifold leak containment member associated with at least one manifold which provides flowing electrolyte to at least one stack of a flowing electrolyte battery and a provision for sensing a fluid leak within the at least one manifold leak containment member.

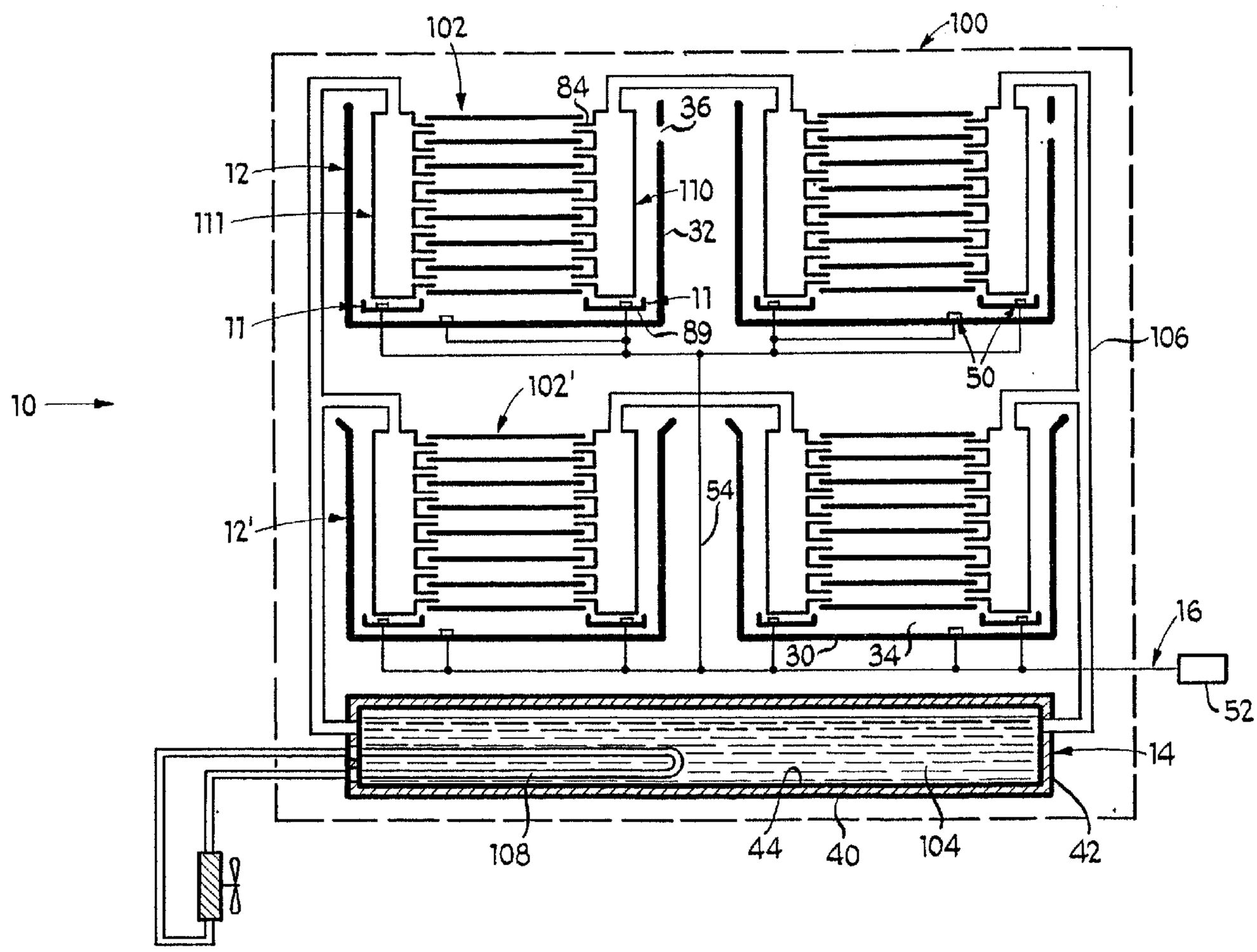

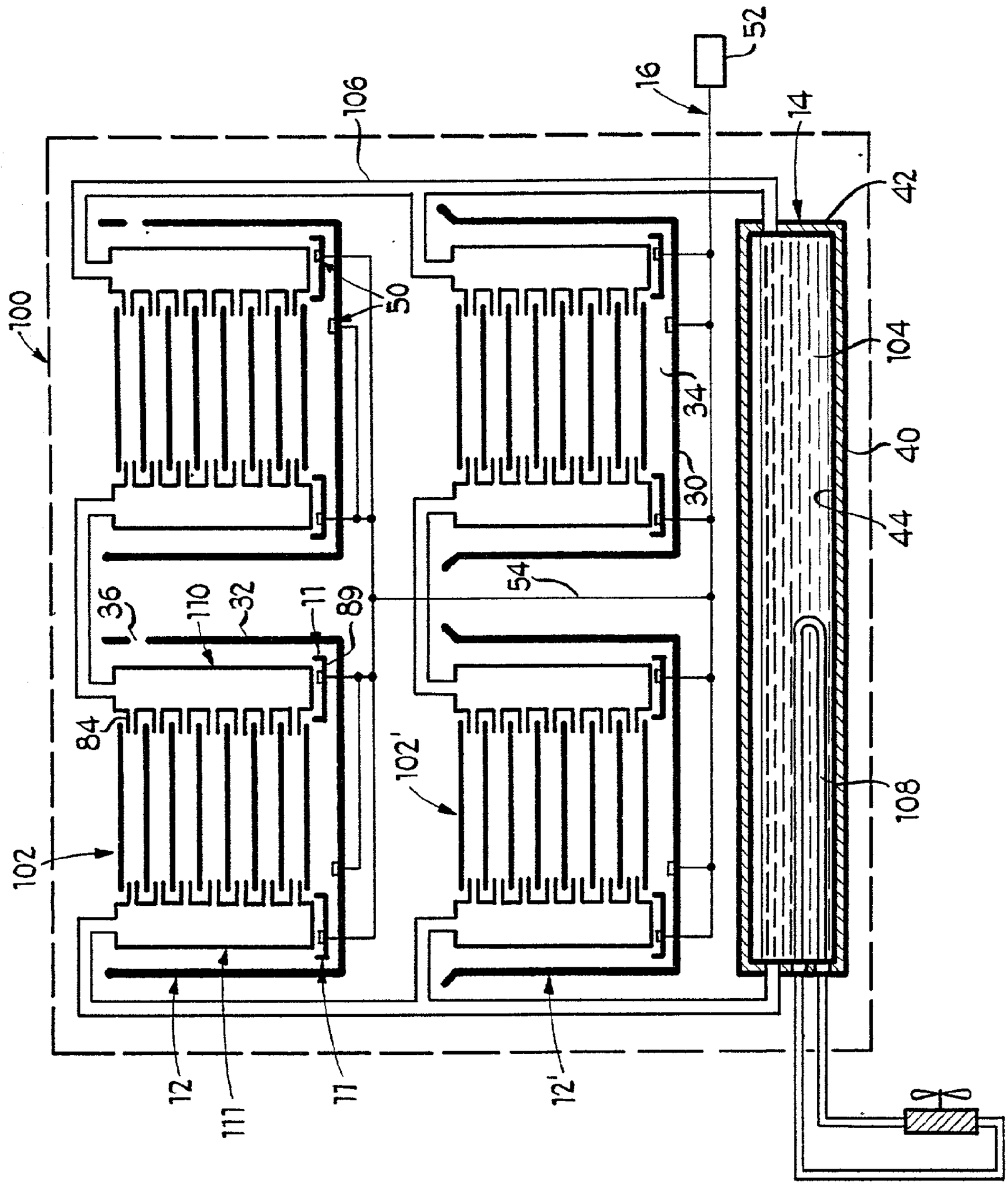
52
16
106
14
42
100
50
104
34
40
30
44
54
36
110
32
11
89
84
102'
108
102
12
111
77
12'
10

Fig 1

Fig 2

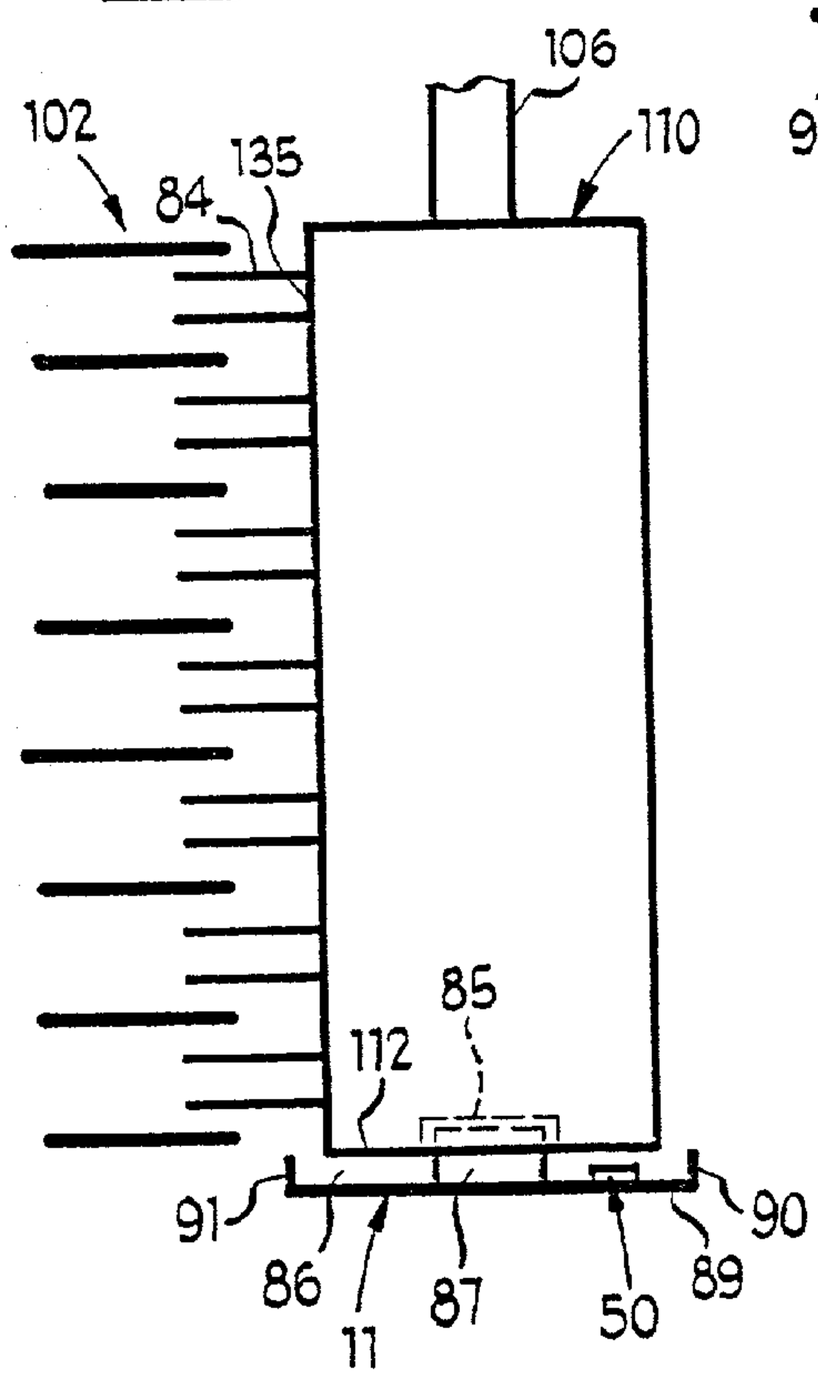

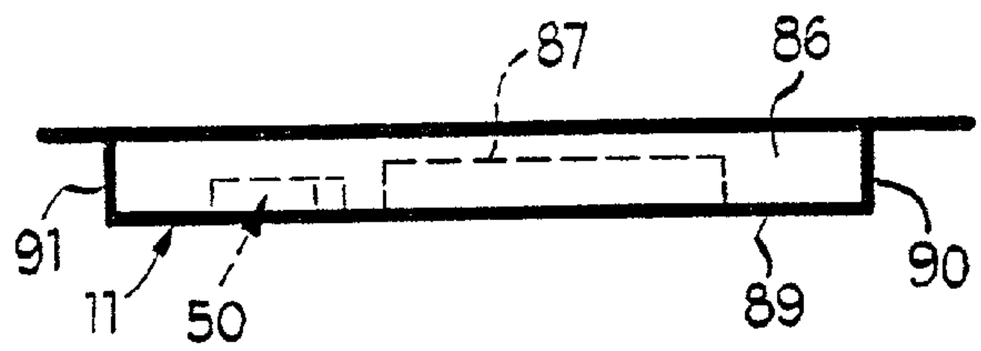

Fig 3

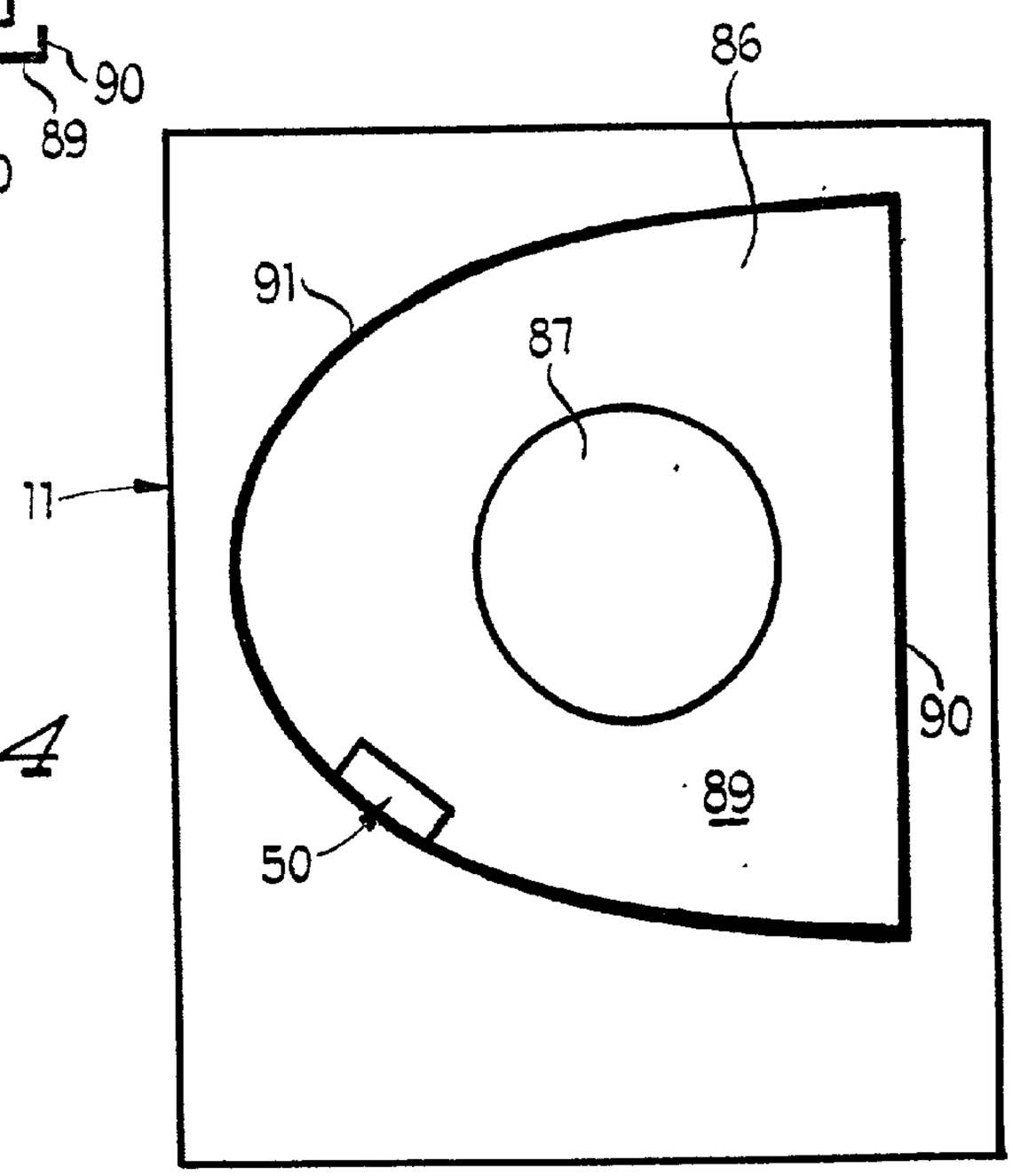

Fig 4

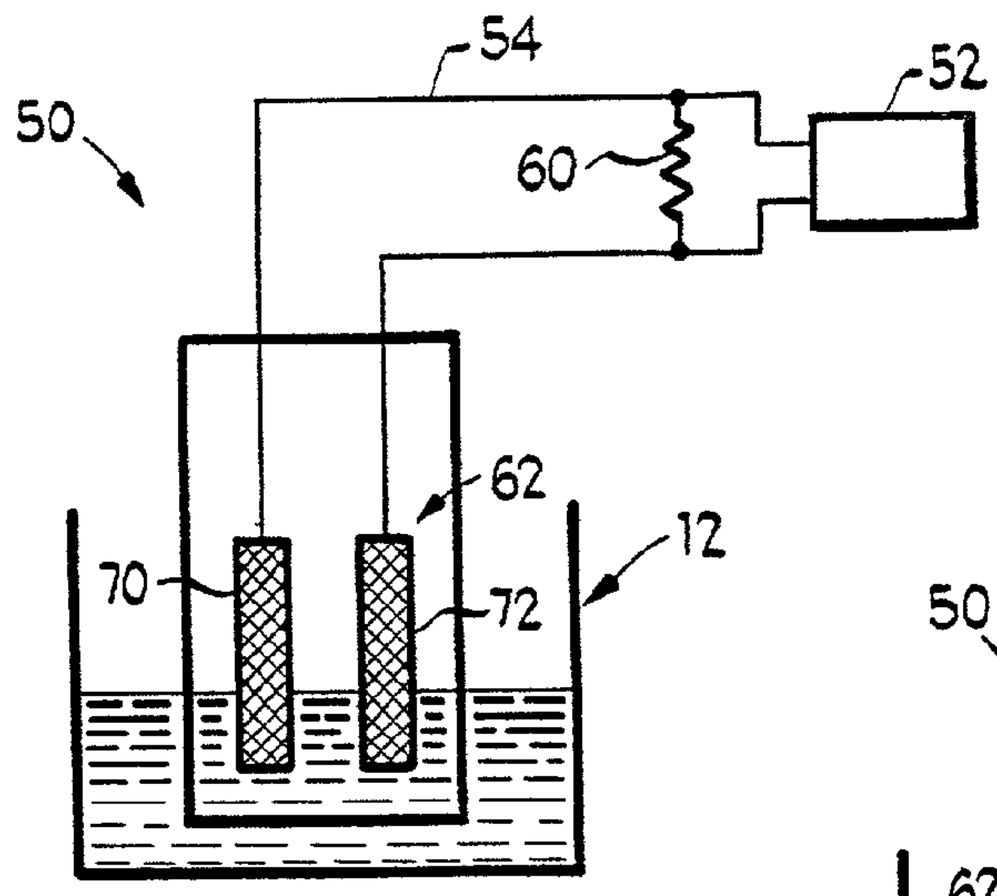

Fig 5

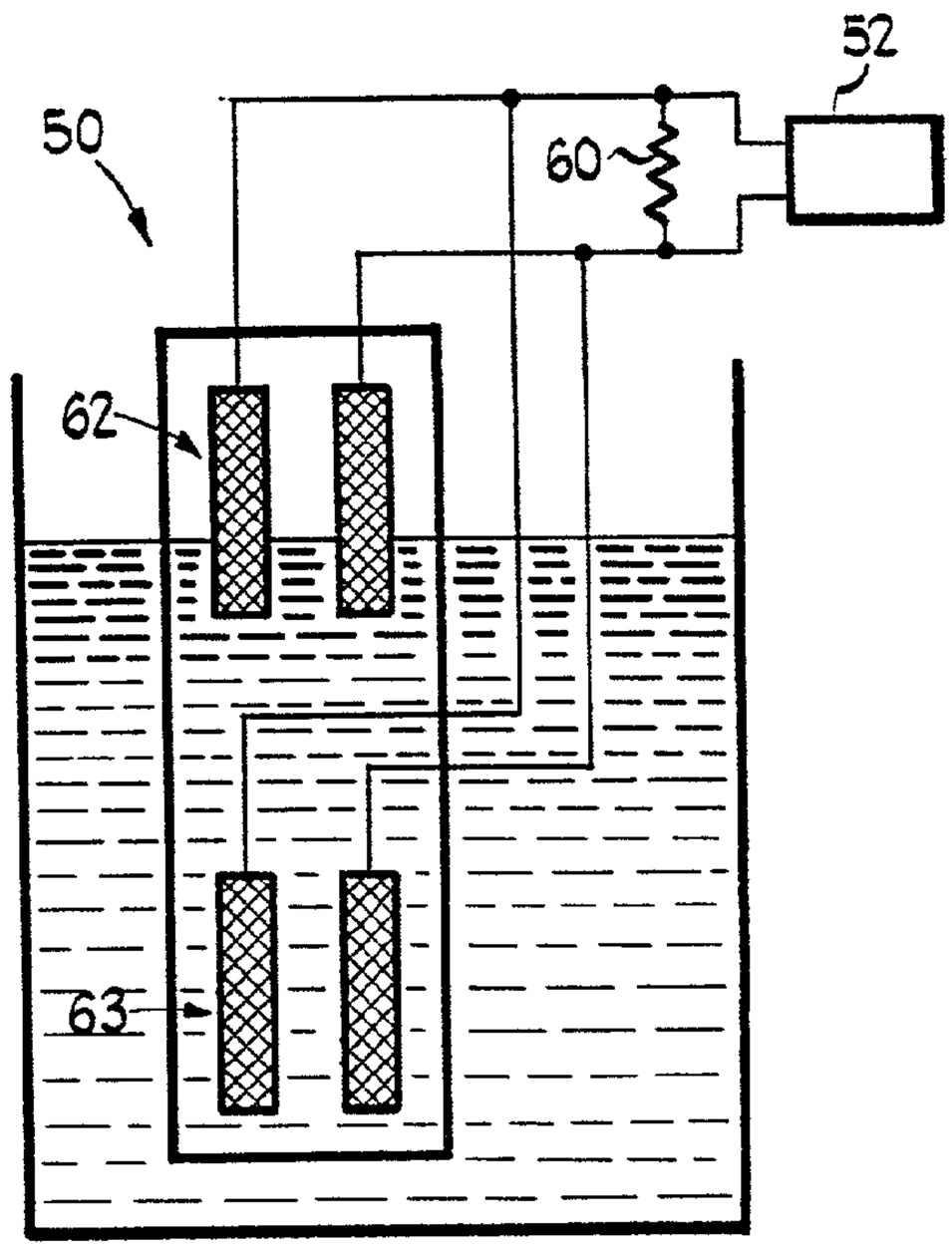

Fig 7

Fig 6

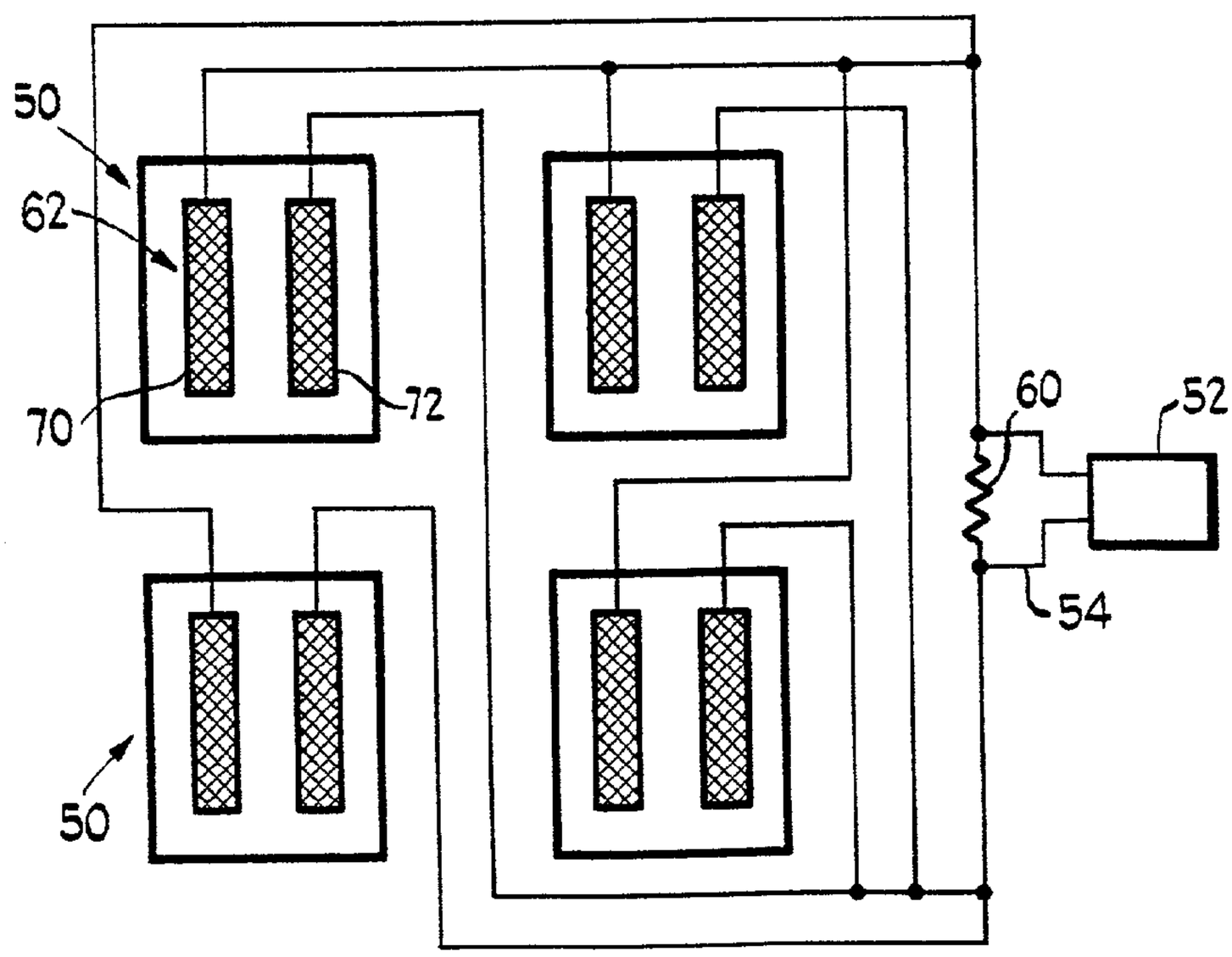

LEAK SENSOR FOR FLOWING ELECTROLYTE BATTERIES

CROSS REFERENCE TO PRIOR APPLICATION

[0001] This application is a continuation-in-part of application Ser. No. 09/899,523 filed Jul. 5, 2001.

BACKGROUND OF THE INVENTION

[0002] 1. Field of the Invention

[0003] The invention is directed to flowing electrolyte batteries, and in particular to a leak sensor for use in association with flowing electrolyte batteries such as zinc/bromine batteries. It will be understood that the application is not limited to any zinc/bromine batteries or to any other particular flowing electrolyte battery.

[0004] 2. Background Art

[0005] Flowing electrolyte batteries (Zn—Br batteries, V-Redox batteries, etc) are well known in the art for their quality of power providing characteristics and their cycling ability. Generally, such batteries rely on the circulation, by pumps, of electrolyte. As the circulation of electrolyte includes a multitude of components, fittings and conduit, a potential always exists for failure of one of these components. Such failure will generally result in a leak of electrolyte.

[0006] In addition, since many such batteries require cooling systems which likewise comprise a multitude of conduit, fittings and component, the cooling systems are likewise problematic. Failure in such components generally results in a leak of coolant. Further still, many such batteries, especially in industrial applications, are placed in a substantially sealed container which remains exposed to a harsh environments. As such, damage to the sealed container often results in the collection of precipitation within the container.

[0007] Any leak of electrolyte or coolant, as well as any entry of outside moisture can have catastrophic results. Specifically, not only will it cause the battery to operate in a less than optimal condition, the battery may completely fail. For industrial applications, and especially when used as an emergency power supply, such batteries must be ready for immediate operation. If a battery fails, then it is incapable of providing power in an emergency. Thus, it is important to provide early notification of a leak in such a battery.

[0008] Moreover, in the event of a failure, it is important to contain any leaks, thereby precluding contamination of the battery by the leaking fluid. By limiting the contamination caused by the fluid leak, the battery can be more easily repaired and returned to operation.

[0009] Furthermore, by limiting the contamination caused by the fluid leak to the specific location of leakage within a multitude of components, fittings and conduit, the battery can be repaired even more rapidly and efficiently.

[0010] Thus, it is an object of the invention to facilitate the containment of a leak within a flowing electrolyte battery.

[0011] It is another object of the invention to facilitate the detection of a leak of fluid within a flowing electrolyte battery. It is a further object of the invention to facilitate the detection of a leak of fluid within a flowing electrolyte battery at the precise location of leakage within a multitude of components, fittings and conduit.

SUMMARY OF THE INVENTION

[0012] The invention comprises a leak detection system for a flowing electrolyte battery. In particular, the system comprises at least one manifold leak containment member associated with at least one manifold which provides flowing electrolyte to at least one stack of a flowing electrolyte battery and means for sensing a fluid leak within the at least one manifold leak containment member.

[0013] In one embodiment, the sensing means comprises a switch, a controller and a connector. The switch comprises a first plate and a second plate, wherein fluid within the containment member serves to electrically couple the first plate to the second plate, to, in turn, close the switch. The controller is associated with the switch and is capable of sensing the condition of the switch. The connector electrically associates the switch and the controller.

[0014] In another embodiment, the sensing means further comprises a resistor positioned in parallel to the switch.

[0015] In yet another embodiment, the at least one switch comprises a plurality of switches positioned in parallel.

[0016] Preferably, the at least one manifold leak containment member comprises a manifold leak containment member associated with each manifold of the flowing electrolyte battery.

[0017] In another aspect of the invention, the invention comprises a leak detection system for a flowing electrolyte battery comprising at least one containment member associated each of at least one manifold of a flowing electrolyte battery, at least one stack of a flowing electrolyte battery; and an electrolyte reservoir of a flowing electrolyte battery, as well as, means for sensing a fluid leak within one of the containment members.

[0018] The sensing means in such an embodiment comprises at least one sensor having at least one switch positioned within one of the containment members such that a leak collecting in the respective containment member triggers the switch, at least one controller associated with the sensor, and, a connector associated with each of the sensor and controller.

[0019] In one embodiment, the sensor includes a plurality of switches. In one such embodiment, the plurality of switches are positioned substantially in parallel.

[0020] In another embodiment of the invention, the sensor includes at least one resistor positioned in parallel with the at least one switch.

[0021] In yet another embodiment of the invention, the controller includes a means for signaling the condition of the sensor to a user.

BRIEF DESCRIPTION OF THE DRAWINGS

[0022] **FIG. 1** of the drawings is a schematic representation of the present invention;

[0023] **FIG. 2** of the drawings is a schematic representation of the manifold and manifold leak containment member of the present invention;

[0024] **FIG. 3** of the drawings is a schematic representation of a side view of the manifold leak containment member of the present invention;

[0025] **FIG. 4** of the drawings is a schematic representation of a top view of the manifold leak containment member of the present invention;

[0026] **FIG. 5** of the drawings is a schematic representation of the sensor of the present invention;

[0027] **FIG. 6** of the drawings is a schematic representation of multiple sensors of the present invention; and

[0028] **FIG. 7** of the drawings is a schematic representation of a second embodiment of a sensor of the present invention.

BEST MODE FOR PRACTICING THE INVENTION

[0029] While this invention is susceptible of embodiment in many different forms, there is shown in the drawings and will be described in detail, one specific embodiment with the understanding that the present disclosure is to be considered as an exemplification of the principles of the invention and is not intended to limit the invention to the embodiment illustrated.

[0030] Leak detection system **10** is shown in **FIG. 1** as comprising manifold leak containment member **11**, stack leak containment member **12**, electrolyte containment member **14** and means **16** for sensing a leak. Leak detection system **10** is for use in association with a flowing electrolyte battery, such as zinc/bromine battery **100**. While various flowing electrolyte batteries are contemplated for use, the invention will be described with reference to a zinc/bromine battery solely as an example.

[0031] Generally, zinc/bromine battery **100** includes one or more stacks, such as stack **102**, electrolyte reservoir **104**, circulating means **106** and means **108** for controlling the climate within battery **100**. Stack **102** includes a plurality of arranged anodes and cathodes so as to comprise a plurality of stacked cells. Electrolyte reservoir **104** stores the electrolyte which is circulated by circulation means **106** through stack **102**. In certain embodiments, a climate control means **108** may be incorporated to either heat or cool the electrolyte so as to maintain the overall battery within operating parameters.

[0032] As shown in **FIGS. 1 and 2**, each stack **102** includes a plurality of manifolds, such as manifolds **110**, **111** associated therewith. Each such manifold **110**, **111** includes a base **112** and openings, such as openings **135**. Base **112** includes recess **85**. Manifold **110** receives electrolyte from reservoir **104** via circulating means **106** and directs electrolyte through openings **135** to the arranged anodes and cathodes of stack **102** via a plurality of manifold circulating means **84**. Manifold **111** receives electrolyte that has traveled through stack **102** and facilitates the return of the electrolyte that has passed across the anodes and cathodes, ultimately, to reservoir **104**. Each of the manifolds, such as manifolds **110**, **111**, can be of any appropriate size and geometric configuration so as to be consistent with the size and configuration of stack **102**. Additionally, while two manifolds are shown, each stack may include a greater number of manifolds. In certain embodiments, the supply of electrolyte can enter into manifold through a bore that is made in recess **85**.

[0033] As shown in FIGS. **2-4**, manifold leak containment member **11** includes base **89** and sides **90**, **91** which define cavity **86**. Each manifold leak containment member **11** includes a protrusion **87**. Protrusion **87** is configured in with a complementary geometry to recess **85** so as to facilitate alignment with and proper positioning of base **112** of the respective manifold within cavity **86** of the manifold containment member. In certain embodiments, the electrolyte feed tube for the manifold extends through protrusion **87** and recess **85**. As will be explained in detail below, manifold leak containment member **11** is positioned as described so as to receive and contain any leaks that may occur in manifold **110** or in any component attached thereto. Preferably, each manifold leak containment member comprises a molded plastic member which is substantially non-reactive with the fluid electrolyte material.

[0034] Electrolyte stack containment member **12** is shown in **FIG. 1** as comprising base **30** and sides **32** which define cavity **34**. As will be understood at least a portion of stack **102** is positioned within cavity **34** such that, in the case of an electrolyte leak in stack **102**, such a leak will fill cavity **34**. In embodiments such as the embodiment shown in **FIG. 1**, wherein two vertically oriented stacks **102**, **102'** form a tower, each stack has its own electrolyte containment member, **12**, **12'**. In such an embodiment, the upper electrolyte containment member **12** includes overflow opening **36**, which, in turn, directs any overflow of electrolyte into the electrolyte containment member **12'**. In this manner, the spread of electrolyte can be minimized.

[0035] Reservoir leak containment member **14** is shown in **FIG. 1** as comprising base **40** and sides **42** which define cavity **44**. The electrolyte reservoirs are positioned within the reservoir containment member such that any leak in the electrolyte reservoirs will be contained by the reservoir containment member. In addition, the reservoirs, and, in turn, the reservoir containment members are positioned below stack **102** such that, in the event of a leak which overflows electrolyte stack containment member **12** (or **12'**) will be directed into, and contained by, reservoir containment member **14**.

[0036] Sensing means **16** is shown in **FIG. 1** as comprising sensors, such as sensor **50**, controller **52** and connector **54**. As will be explained, sensors **50** are preferably present both at base **30** of stack leak containment member **12** and within cavity **86** of manifold leak containment member **11**. Each such sensor **50** includes base resistor **60** and switch **62**. Switch **62** is in parallel with resistor **60** and includes surface **70** and surface **72**. As will be explained in detail below, in the event of a leak, the leaking fluid contacts surface **70** and surface **72**, to, in turn, close the circuit, essentially forming a switch. While other shapes are contemplated, the surfaces **70**, **72** comprise mesh surfaces. Such mesh surfaces provide a relatively large surface area for contact of the fluid with the mesh surfaces. While various systems are contemplated, resistor **60** comprises a resistor having a value of 3000Ω, and the voltage applied to switch **62** and resistor **60** is 24V. Of course, various other circuits are contemplated, wherein the applied voltage may be either lower or higher, and, various resistors are contemplated for use. In other embodi-

ments, the resistor may be omitted wherein the controller views the circuit as an open circuit until such time as the switch is closed.

[0037] Connector **54** connects controller **52** to sensor **50** such that controller **52** is capable of sensing the closing of a switch **62** of sensor **50**. As will be explained below, if fluid from a leak provides a closed circuit across surfaces **70**, **72**, then the resistance of the parallel combination of the switch and the resistor effectively decreases, and the current in the system increases (i.e. voltage remains constant, and therefore voltage is equal to resistance times current). Controller **52** comprises a digital microcontroller capable of reading the current change across the resistor and the switch. Of course, various analog or digital systems are contemplated for use.

[0038] In operation, a flowing electrolyte battery is first equipped with leak detection system **10**. Specifically, manifold leak containment member **11** is provided for each manifold **110**, **111**, stack leak containment member **12** is provided for each stack and each stack is positioned so that a portion is within cavity **34**. Additionally, electrolyte reservoirs **104** are positioned within electrolyte reservoir leak containment member **14**.

[0039] Once the containment members are positioned, sensors **50** are positioned within the cavity **86** of each manifold leak containment member **11** and within each stack leak containment member **12**. Subsequently, sensors, such as sensor **50**, are likewise positioned within the reservoir leak containment member **14**, and likewise in the bottom of the unit (in case of overflow from any of the containment members). Once positioned, each sensor is attached to one or more controllers, such as controller **52**, via connectors **54**. The sensors are positioned such that a leak that collects in any of the respective containment members (or at the bottom of the unit) will close a circuit about the surfaces **70**, **72** of the respective switch **62**, which can be sensed by controller **52**. Generally, to achieve early recognition of leaks, the sensors are generally positioned proximate the lowest point of the respective containment member.

[0040] From time to time, the flowing electrolyte battery can experience an electrolyte leak in, for example manifold **110**. In such an instance, the electrolyte leak will collect in the respective manifold leak containment member **11** . As the level of electrolyte in the manifold leak containment member **11** increases, eventually, electrolyte will contact both surface **70** and surface **72** of switch **62**, thereby effectively closing the circuit. As a result, the current in the circuit will tend to increase, and the increase is sensed by controller **50**. Controller **50** can then provide some type of final output (i.e. audible, visual, radio, infra red, connection to a main control unit, etc.) so that a user can be informed of the leak. In certain embodiments, the electrolyte pumps can automatically be turned off upon recognition of a leak.

[0041] Similarly, a leak in the reservoir **104** will tend to cause electrolyte to enter into the reservoir containment member **14**. As the level of electrolyte increases in the reservoir leak containment member **14**, electrolyte will contact surface **70** and **72** of the sensor positioned within the reservoir leak containment member and the switch will be effectively closed by the electrolyte. In turn, the circuit will exhibit an increased current which will be sensed by the controller **50**.

[0042] It will be understood that in certain embodiments which utilize a liquid coolant, a coolant leak can occur. Such a coolant leak will generally collect in the base of the unit or in the reservoir containment member. As with the electrolyte leak, as the coolant level rises, the coolant will contact the surfaces **70** and **72** of one of the sensors, thereby effectively closing the switch.

[0043] Again, the controller will recognize the closing of the switch. Indeed, any fluid collection (i.e. electrolyte leak, coolant leak, condensation, outside precipitation) within any of the containment members or proximate the base of the flowing electrolyte battery will trigger a sensor switch to close. Since each such fluid generally comprises a different resistivity (i.e. the electrolyte is generally exhibits less electrical resistance than coolant or water(contaminated)), current changes sensed by the controller will be different based on the fluid that is causing the closing of the respective switch. In turn, the controller can be programmed to distinguish between the different leaks. In this case, if the controller determines that the cause of the leak is condensation, there is no need to service the battery or to take the battery out of operation.

[0044] In another embodiment, as shown in **FIG. 6**, the sensor may comprise a plurality of switches in parallel with a single resistor. In such an embodiment, each switch may be positioned in a different area, such as the electrolyte containment member, the electrolyte reservoir containment member and the overflow area of the housing. As such, a leak in any one of these areas will cause fluid in the respective area to close the switch, and in turn, lower the overall resistance of the circuit. The lower resistance (and increased current) is then sensed by the controller which is attached to the sensor. In such an embodiment, the controller can signal a leak, however, the precise location of the leak is not known.

[0045] In another embodiment, as shown in **FIG. 7** , sensor **50** may include an additional switch, namely, switch **63** which is positioned in parallel to switch **62** and resistor **60**. When installed, switch **63** is positioned lower than switch **62** such that a leak will first close switch **63** before the leak closes switch **62**. As will be understood, a small leak will tend to close switch **62**, whereas a large leak will tend to close switch **63** and switch **62**. As a result, the controller will receive a first current reading increase as the leak closes switch **63** and a second current reading increase as the leak closes switch **62**. Accordingly, the controller can be used to access the severity of the leak, as well as the precise origin of the leak, such as from the manifold or the stack.

[0046] The foregoing description merely explains and illustrates the invention and the invention is not limited thereto except insofar as the appended claims are so limited, as those skilled in the art who have the disclosure before them will be able to make modifications without departing from the scope of the invention.

What is claimed is:

1. A leak detection system for a flowing electrolyte battery comprising:

at least one manifold leak containment member associated with at least one manifold which provides flowing electrolyte to at least one stack of a flowing electrolyte battery; and

means for sensing a fluid leak within the at least one manifold leak containment member.

2. The system of claim 1 wherein the sensing means comprises:

at least one switch comprising a first plate and a second plate, wherein fluid within the containment member serves to electrically couple the first plate to the second plate, to, in turn, close the switch;

a controller associated with the switch, the controller capable of sensing the condition of the switch; and

a connector electrically associating the switch and the controller.

3. The system of claim 2 wherein the sensing means further comprises:

a resistor positioned in parallel to the switch.

4. The system of claim 2 wherein the at least one switch comprises a plurality of switches positioned in parallel.

5. The system of claim 1 wherein the at least one manifold leak containment member comprises a manifold leak containment member associated with each manifold of the flowing electrolyte battery.

6. A leak detection system for a flowing electrolyte battery comprising:

at least one containment member associated with at least one manifold of a flowing electrolyte battery;

at least one containment member associated with at least one stack of a flowing electrolyte battery;

at least one containment member associated with an electrolyte reservoir of a flowing electrolyte battery; and

means for sensing a fluid leak within one of the containment members, wherein the sensing means comprises:

at least one sensor having at least one switch positioned within one of the containment members such that a leak collecting in the respective containment member triggers the switch;

at least one controller associated with the sensor; and

a connector associated with each of the sensor and controller.

7. The leak detection system of claim 6 wherein the sensor includes a plurality of switches.

8. The leak detection system of claim 7 wherein the plurality of switches are positioned substantially in parallel.

9. The leak detection system of claim 6 wherein the sensor includes at least one resistor positioned in parallel with the at least one switch.

10. The leak detection system of claim 6 wherein the controller includes a means for signaling the condition of the sensor to a user.

* * * * *