May 14, 1935. C. T. CARLSON 2,001,663

HEATER

Filed Oct. 17, 1932

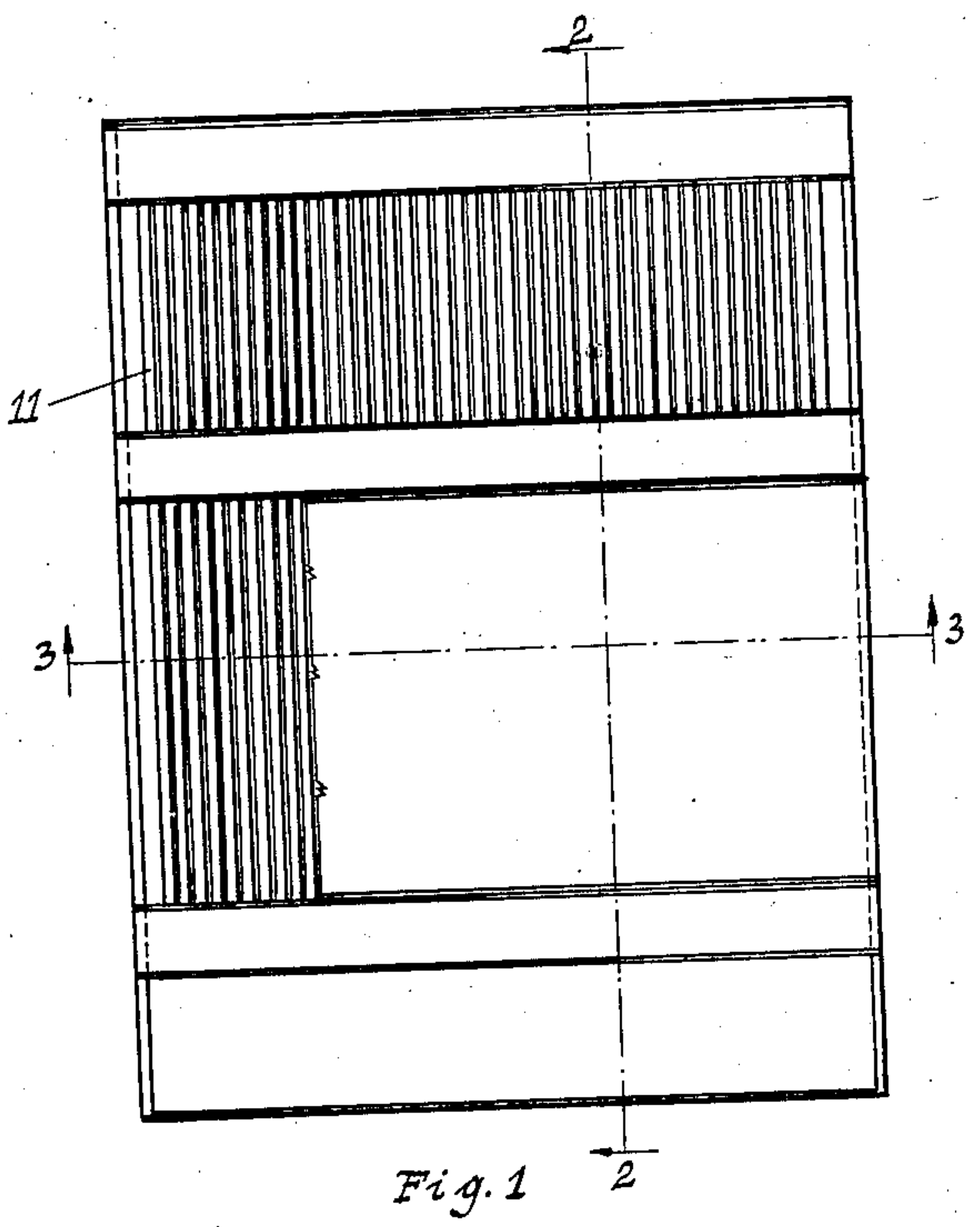

Fig. 1

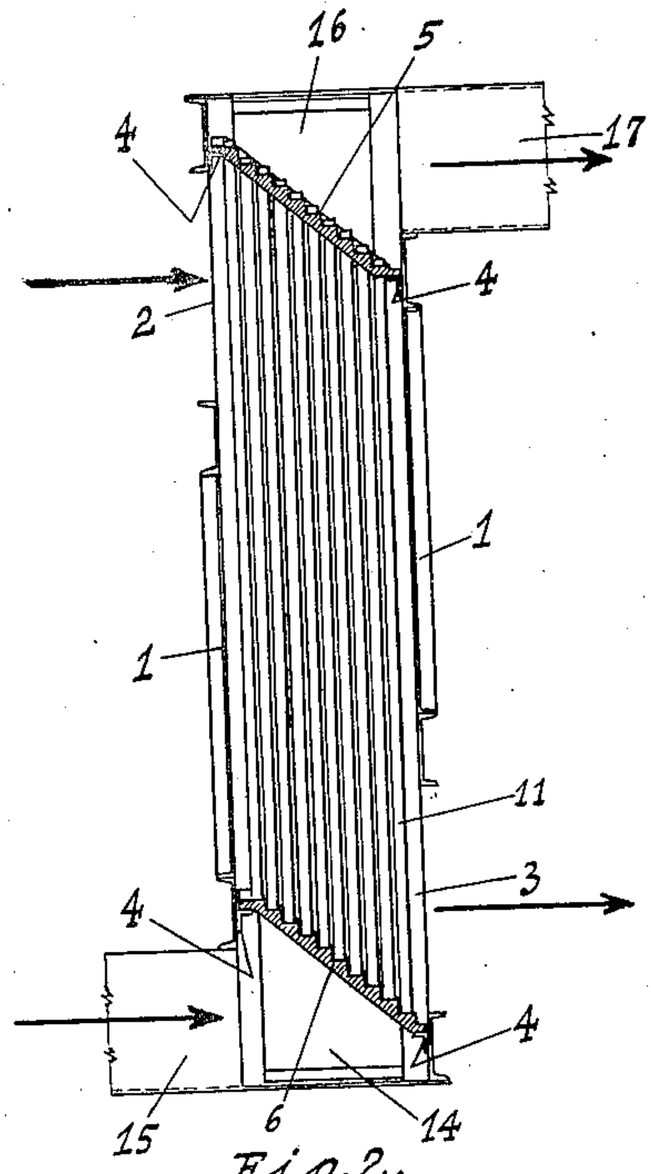

Fig. 2.

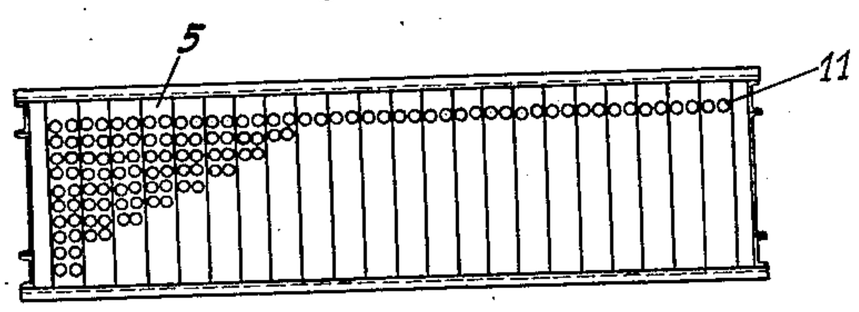

Fig. 3.

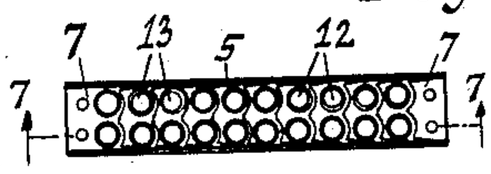

Fig. 4.

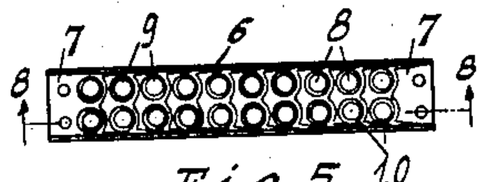

Fig. 5.

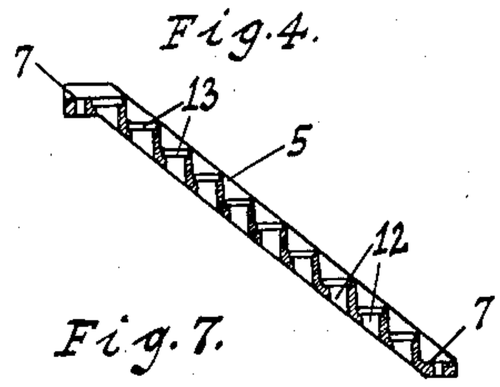

Fig. 7.

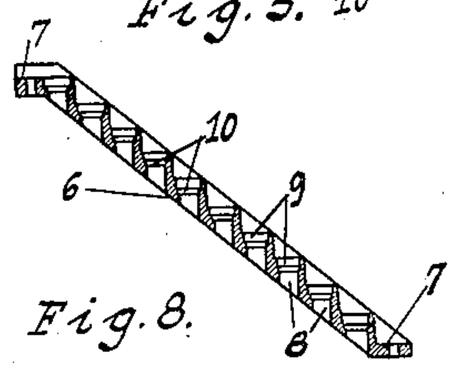

Fig. 8.

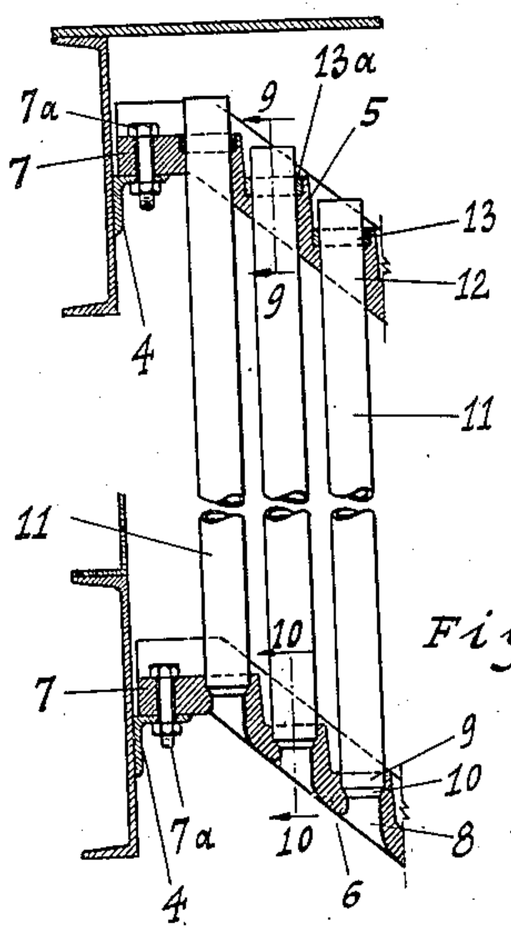

Fig. 6.

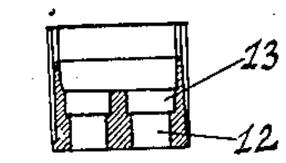

Fig. 9.

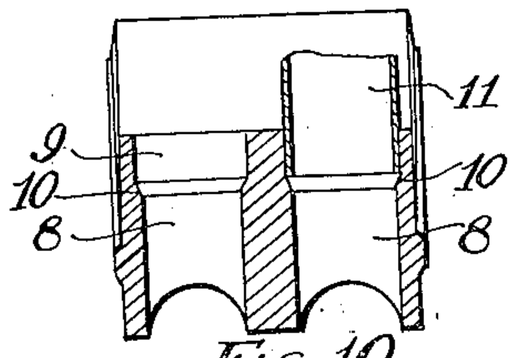

FIG 10.

INVENTOR.

Carl T. Carlson

BY

ATTORNEYS.

Patented May 14, 1935

2,001,663

UNITED STATES PATENT OFFICE

2,001,663

HEATER

Carl T. Carlson, Erie, Pa., assignor to Erie City Iron Works, Erie, Pa., a corporation of Pennsylvania

Application October 17, 1932, Serial No. 638,191

3 Claims. (Cl. 257—224)

The present invention is designed to simplify and render more efficient heating devices. The invention is exemplified as an air heater utilizing as a medium for heating the air, for instance, flue gases. The air so heated may be utilized for combustion. In fabricating the heater I provide tubes for carrying one of the heat exchanging fluids and arrange these tubes so that the heater as a whole can expand without strain and the tubes can be introduced with very small effort. I also provide means so that any tube, or tube plate, may be readily removed, or renewed where either of these are injured. Features and details of the invention will appear from the specification and claims.

A preferred embodiment of the invention is illustrated in the accompanying drawing as follows:—

Fig. 1 shows a front elevation of the heater, one of the plates being partially removed to better show construction.

Fig. 2 a section on the line 2—2 in Fig. 1.

Fig. 3 a section on the line 3—3 in Fig. 1.

Fig. 4 a plan view of an upper tube plate detached.

Fig. 5 a plan view of a lower tube plate detached.

Fig. 6 an enlarged view on the line 2—2 in Fig. 1.

Fig. 7 a section on the line 7—7 in Fig. 4.

Fig. 8 a section on the line 8—8 in Fig. 5.

Fig. 9 a section on the line 9—9 in Fig. 6 of one of the upper tube plates, the tubes being omitted.

Fig. 10 a section on the line 10—10 in Fig. 6 of one of the lower tube plates, the tubes being omitted.

1 marks the case which is ordinarily rectangular and has an inlet opening 2 for air at one upper face and a discharge opening 3 for air at the lower part of the opposite face so that the air has an incoming, downward and outgoing movement. Brackets 4 are arranged transversely along the inner walls of the case. Upper tube plates 5 are secured on the upper brackets 4—4, these tube plates having tube openings arranged in pairs and the tube plates being arranged on an incline. Lower tube plates 6 are mounted on the lower brackets 4. These tube plates also have tube openings arranged in pairs and registering with the tube openings in the plates 5. The plates 5 and 6 have attaching extensions 7 and these extensions rest on the brackets 4 and are secured thereon by bolts 7*a*.

Openings 8 in the lower tube plate have tube sockets 9 formed in their upper ends, the sockets preferably terminating in beveled seats 10. Tubes 11, preferably with the lower end of the tubes cut off at right angles, seat on these beveled surfaces and by biting into the metal on the slope of the seat form a substantially gas-tight joint. The tubes 11 extend through openings 12 in the upper plate and the upper parts of these openings have enlargements 13 in which is put incombustible packing 13*a*, such for instance, as asbestos. It will be noted that the sockets with their seats 10 are formed in stepped relation down the inclined bottom plate and it will be noted that the sockets, 13, in the upper plate are similarly stepped. The hot gases are delivered to a chamber 14 below the bottom plate by an inlet flue 15 and a chamber 16 is arranged above the upper plate and discharges to a flue 17. It will be noted that with this structure the joint on the lower seat is maintained largely by the weight of the tube, that the tubes may be very readily inserted and removed, and that the packing in the upper socket is such as to permit the sliding movement of the tube through the packing so that the expansion and contraction to which the device is subjected will not injure the parts. The plates are preferably made in narrow sections, each plate being sufficiently wide to carry a pair of tubes side by side.

It will be understood that the cover plate for the chamber 16 is removable permitting the removal and replacement of any of the tubes, or the removal of all the tubes with relation to any of the tube plates. This permits of the removal and replacement of the tube plates from the heat exchange chamber through manipulation from without the chamber and after any tube plates are replaced the tubes may be renewed as above described. It will also be noted that the packing 13*a* may be removed by entrance to the chamber 16 only so that it is not necessary to enter the heat exchange space for this purpose. It will also be noted that no machining is necessary in the apparatus, the sharp edge seating at the bottom making a sufficiently close joint for the bottom ends of the tubes and the gaskets affording a sufficiently close joint for the upper ends of the tubes. This permits of the use of comparatively light, or inexpensive tubing, in fact, inexpensive materials for the entire device.

While I have shown the sections carrying the tubes as having a width including two rows of tubes, it will be understood that these sections are not limited to this number of rows of tubes. By making the sections, however, of a convenient

width, or containing a convenient number of tubes, the installation and handling of the sections is very much more convenient than larger sections. By webbing the individual sections of the supports their weight may be very much reduced, thus facilitating the handling and erection of the apparatus. It will be understood that ordinarily the top and bottom plates will be installed in position and the tubes 3 inserted in the assembled apparatus, the top plate above the chamber 16 being preferably removable to facilitate this assembly. It will be noted also that the openings 8 leading to the tubes have rounded corners, or are flaring toward the inlet. This may be readily accomplished because these inlets are formed in the supports. Such an arrangement of opening reduces the resistance to flow very materially.

What I claim as new is:—

1. In a heater, the combination of a case having an inlet and discharge; a tube plate at the bottom of the case having openings with beveled tube seats therein; a tube plate at the top with openings therein; tubes extending into the openings in the top plate and, said tubes having surrounding edges at their bottom ends seated on the beveled surfaces of the seats in the bottom plate; and inlet and exhaust chambers outside of the tube plates with which the tubes communicate.

2. In a heater, the combination of a case having an inlet and discharge; a series of tube plates at the bottom arranged side by side and in inclined position, said tube plates having openings therein with tube seats in the openings; an inclined top plate at the top with tube openings therein; tubes extending into the openings in the top plate and seated on the seats in the bottom plates; and inlet and exhaust chambers outside the tube plates with which the tubes connect.

3. In a heater, the combination of a case having an inlet and discharge; a tube plate at the bottom of the case having openings with tube seats therein, the inlet sides of said openings being flared; a tube plate at the top with openings therein; tubes extending into the openings in the top plate and, said tubes having surrounding edges on their lower ends seated on the flaring seats in the bottom plate; and inlet and exhaust chambers outside of the tube plates with which the tubes communicate.

CARL T. CARLSON.