Nov. 6, 1934. M. J. RUTLEDGE 1,980,098

IRONING BOARD

Filed Dec. 8, 1933 2 Sheets-Sheet 1

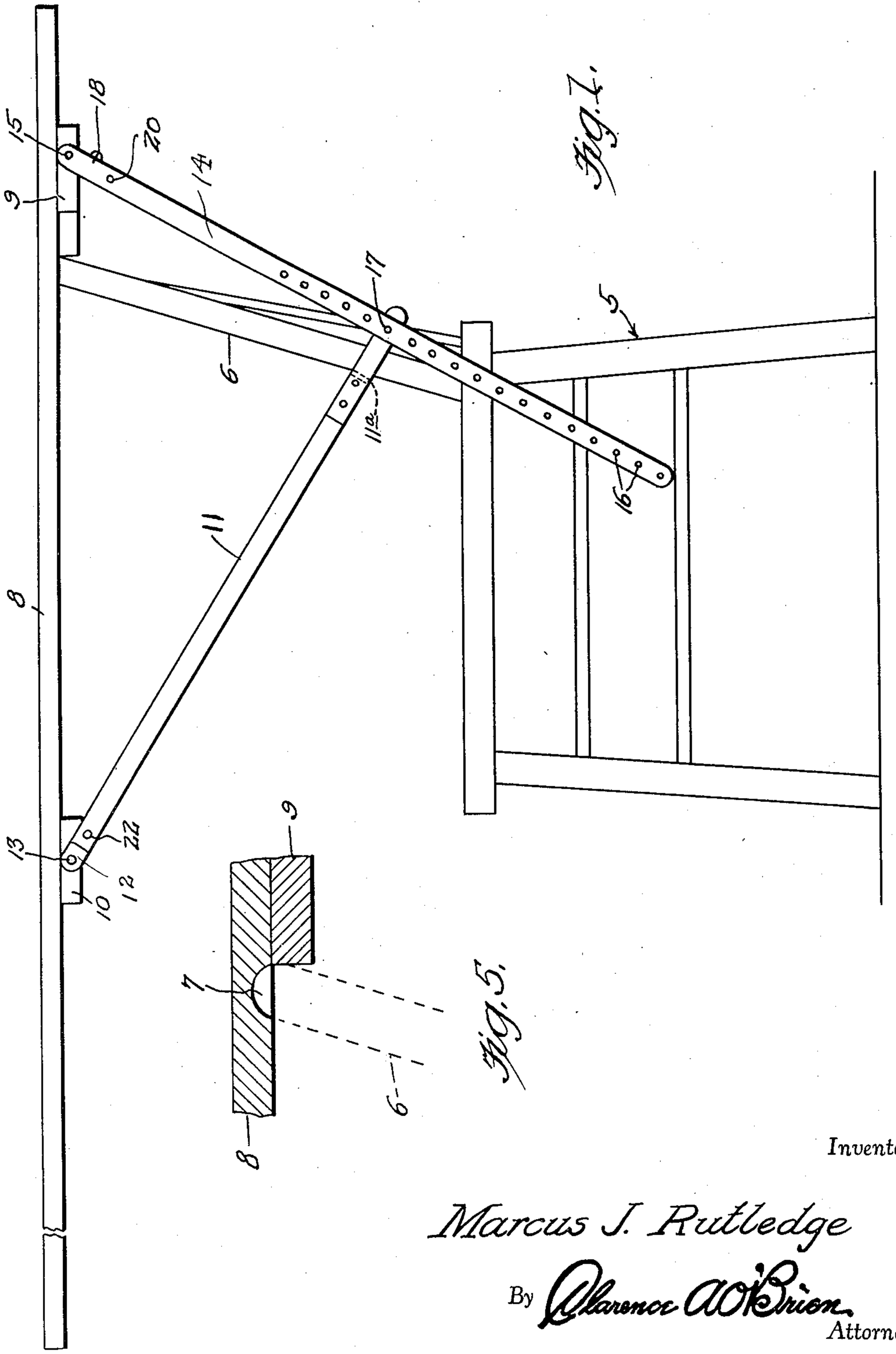

Fig. 1.

Fig. 5.

Inventor

Marcus J. Rutledge

By Clarence A. O'Brien

Attorney

Nov. 6, 1934. M. J. RUTLEDGE 1,980,098

IRONING BOARD

Filed Dec. 8, 1933 2 Sheets-Sheet 2

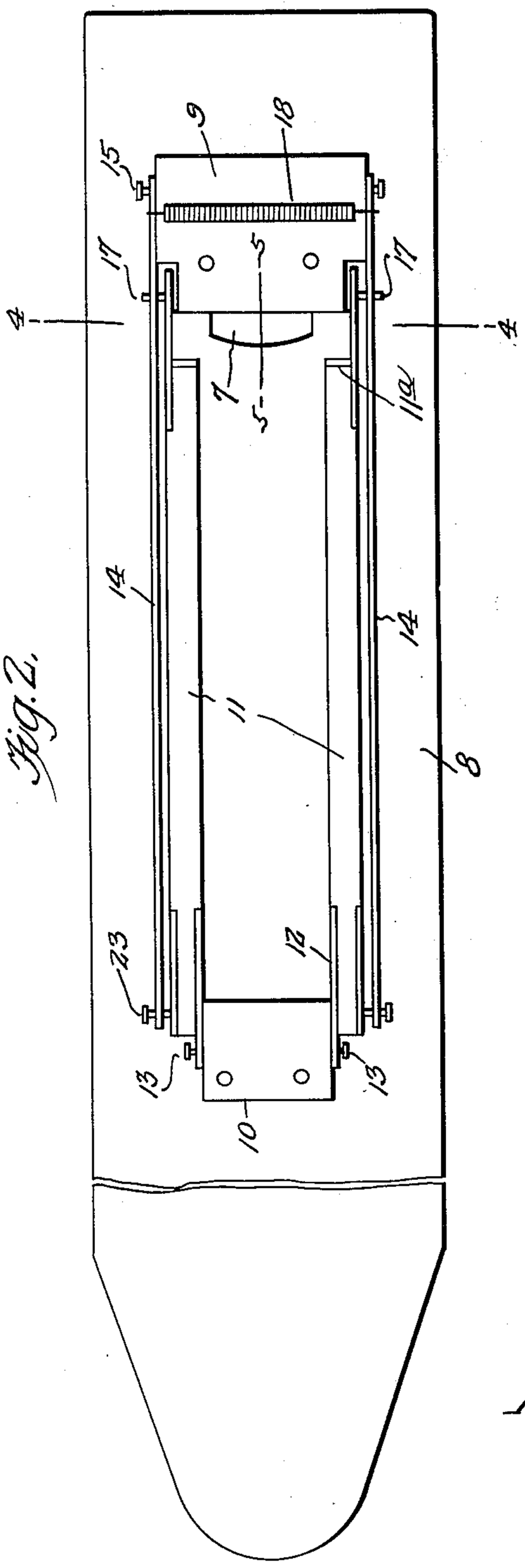

Fig. 2.

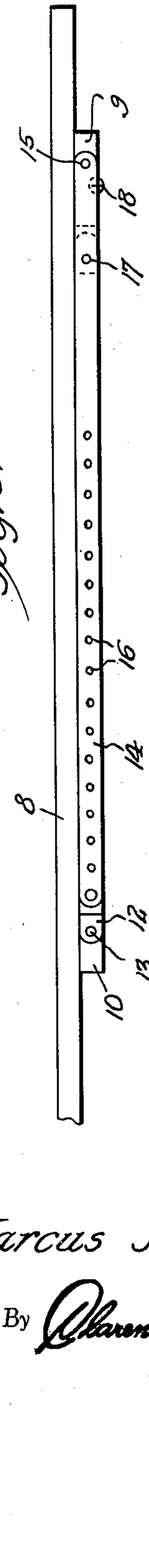

Fig. 3.

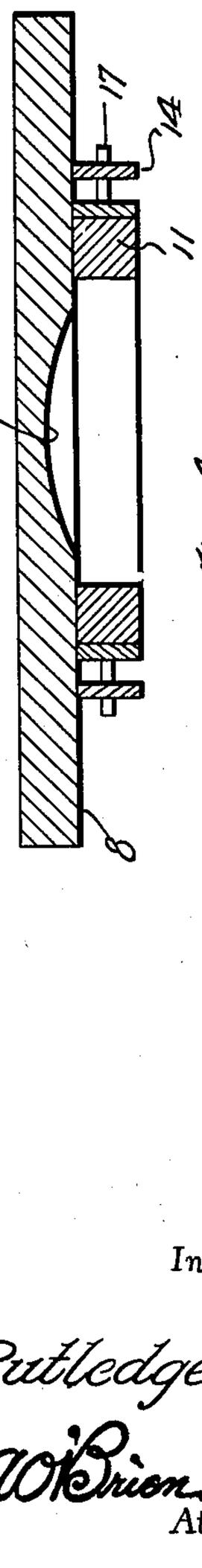

Fig. 4.

Inventor

Marcus J. Rutledge

By Clarence A. O'Brien

Attorney

Patented Nov. 6, 1934

1,980,098

UNITED STATES PATENT OFFICE

1,980,098

IRONING BOARD

Marcus J. Rutledge, Los Angeles, Calif.

Application December 8, 1933, Serial No. 701,516

3 Claims. (Cl. 68—10)

This invention appertains to new and useful improvements in ironing boards, and more particularly to an ironing board in the form of an attachment for chairs.

The principal object of the present invention is to provide an ironing board which can be readily attached to any kitchen chair or like piece of furniture.

Another important object of the present invention is to provide an ironing board of the type stated which can be readily folded for storage in a small space.

Other important objects and advantages of the invention will become apparent to the reader of the following specification.

In the drawings:—

Figure 1 represents a side elevational view of the ironing board attached to a chair.

Figure 2 represents a bottom plan view of the board folded.

Figure 3 represents a fragmentary side elevational view of the board folded.

Figure 4 represents a cross sectional view taken substantially on line 4—4 of Figure 2.

Figure 5 represents a fragmentary detailed sectional view taken substantially on line 5—5 of Figure 2.

Referring to the drawings wherein like numerals designate like parts, it can be seen in Figure 1 that numeral 5 generally refers to a kitchen chair having the back section 6. This back section is provided as is usual in this type of chair with a rounded top portion which will be received by the grooveway 7 in the ironing board 8. This board 8 has the plate 9 secured to the bottom of the same adjacent the transverse groove 7, while another plate 10 is secured to the bottom side of the board at an intermediate point thereof. The elongated brace members 11—11 are provided with resilient pads 11ª and with bar extension equipped with metallic extensions 12 which have openings in the ends thereof through which the pivot members 13 are disposed and engaged into opposite end portions of the plate 10. Leg members 14—14 are secured by pivot members 15—15 to the opposite ends of the plate 9 and these leg members 14 are provided with a plurality of equidistantly spaced openings 16 extending from an intermediate point on each to its free end.

The free ends of the brace members 11 are provided with outwardly disposed pintles 17 which extend into the openings 16 of the leg members 14. A spring 18 is connected across the pivoted ends of the legs 14 to keep the same snug against the ends of the plate 9, especially when the parts are folded in the position shown in Figure 2. Adjacent the pivoted ends of the legs 14 are openings 20 into which the pintles 17 engage when the parts are folded (as shown in Figure 4) so as to retain the parts in folded position.

Obviously, proper positioning of the board can be secured when the parts are extended by finding the proper openings 16 for the pintles 17. It will also be observed that adjacent the pivoted ends of the braces 11 are openings 22 which can receive pegs 23 disposed through the openings at the free ends of the legs 14 to further retain the parts in folded position, as shown in Figure 2.

It will also be observed that the pads 11ª will bear against the back 6 of the chair, while the leg members 14 in engaging the bar extensions of the brace members 11, will serve to keep the extensions against the chair back with the padded ends of the brace members 11 abutting the chair back.

While the foregoing specification sets forth the invention in specific terms, it is to be understood that numerous changes in the shape, size and materials may be resorted to without departing from the spirit and scope of the invention as claimed hereinafter.

Having described the invention, what is claimed as new is:—

1. A chair attachable ironing board comprising a board, a pair of depending leg members having longitudinally spaced openings therein, a pair of depending leg members swingably connected to the board and each provided with a pintle at its free end for disposition through corresponding openings in the leg members.

2. A chair attachable ironing board comprising a board, a pair of depending leg members having longitudinally spaced openings therein, a pair of depending leg members swingably connected to the board and each provided with a pintle at its free end for disposition through corresponding openings in the leg members, said board having a transverse grooveway in the bottom thereof for receiving the back of a supporting chair.

3. An ironing board attachment for chairs comprising a board having a block secured to the bottom thereof adjacent one end, a pair of depending leg members pivotally connected to opposite sides of the block at their upper ends, brace members pivotally connected at their upper ends to the bottom of the board, said leg members being provided with longitudinally spaced openings therein, connecting means between the lower end portions of the brace members and the openings of the leg members, and a spring connecting the upper end portions of the leg members to normally tension the same against the opposite side portions of the said block.

MARCUS J. RUTLEDGE.