June 3, 1930. H. JUNKERS 1,761,887

METHOD AND MEANS FOR UPSETTING SHEET METAL

Filed Aug. 3, 1925 2 Sheets-Sheet 1

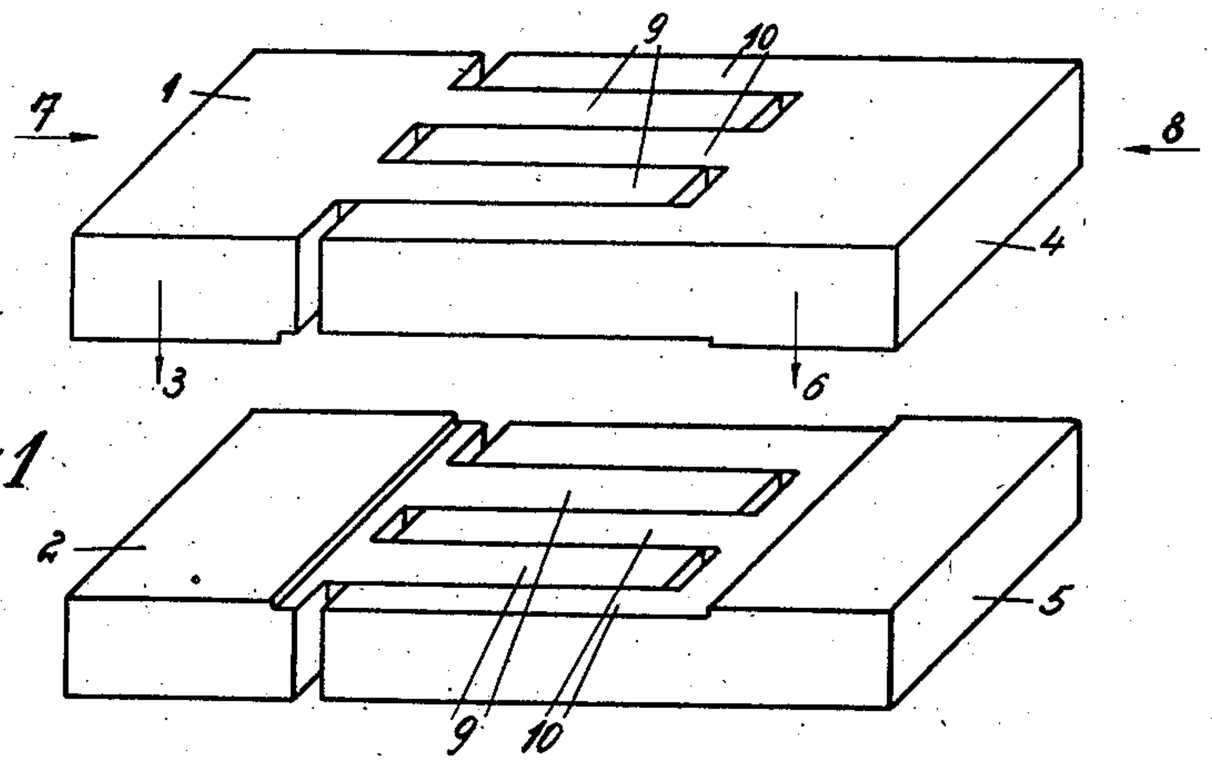

Fig. 1

Inventor:
Hugo Junkers
by Kuidacier
Atty.

June 3, 1930. H. JUNKERS 1,761,887

METHOD AND MEANS FOR UPSETTING SHEET METAL

Filed Aug. 3, 1925 2 Sheets-Sheet 2

Fig. 2

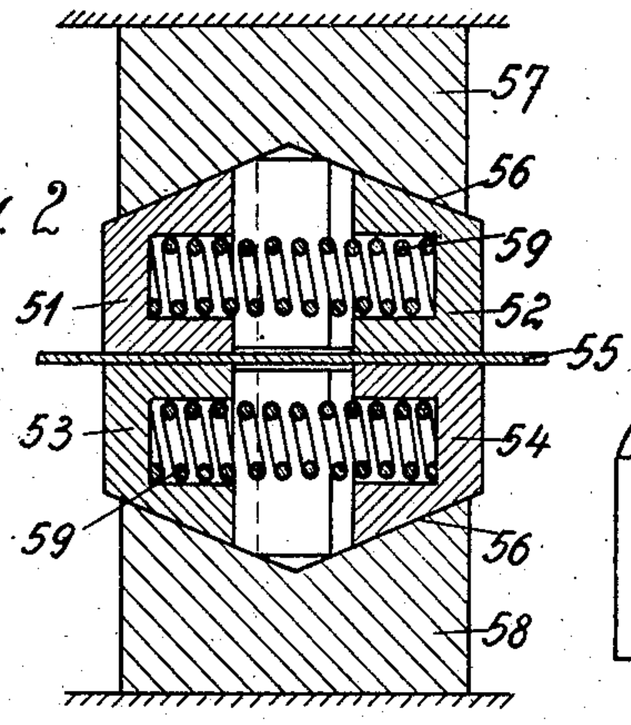

Fig. 7

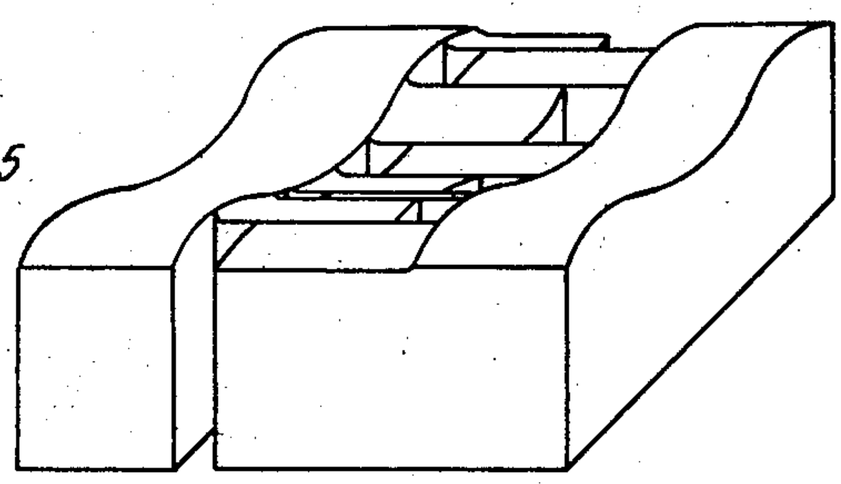

Fig. 6

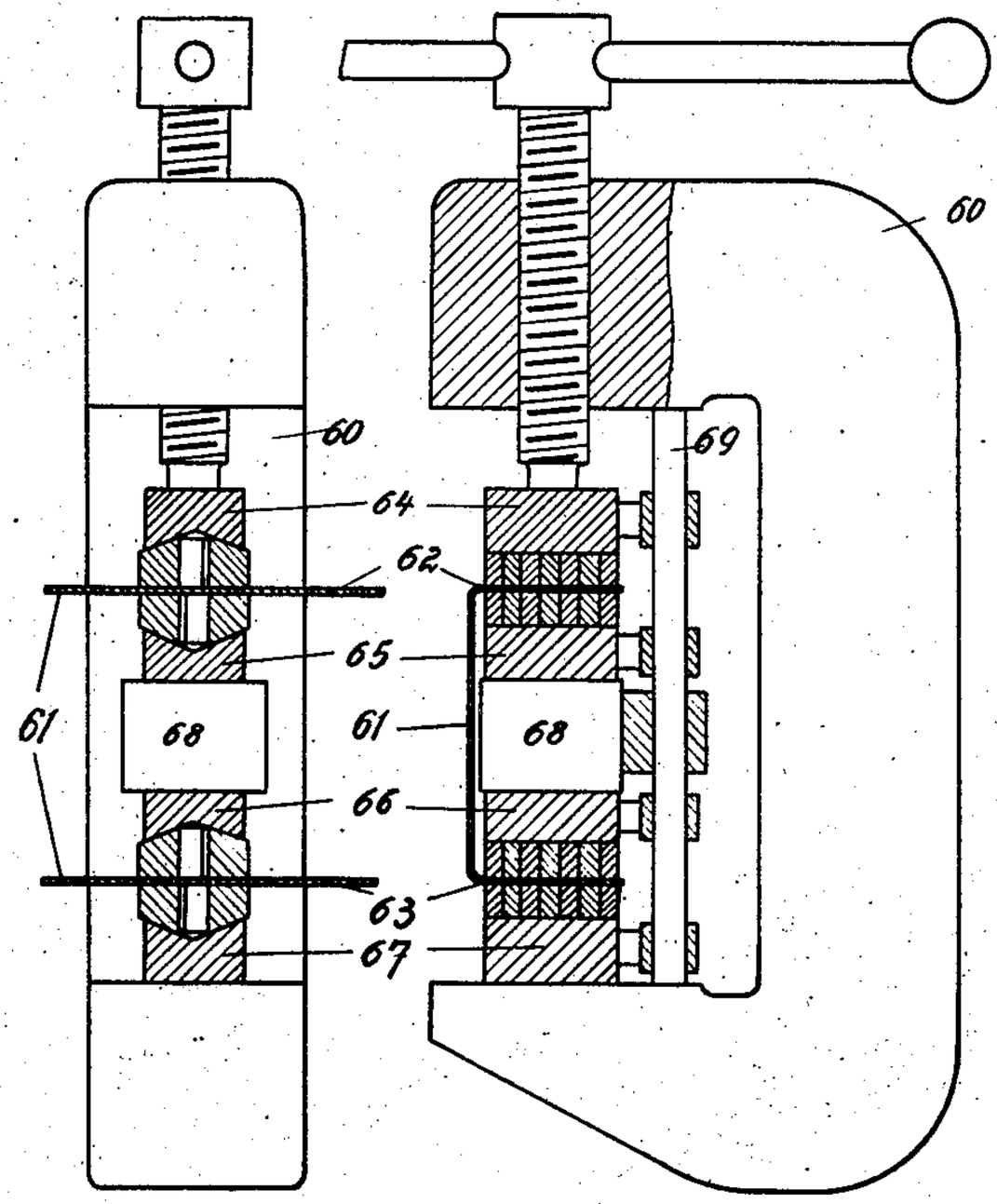

Fig. 5

Fig. 3

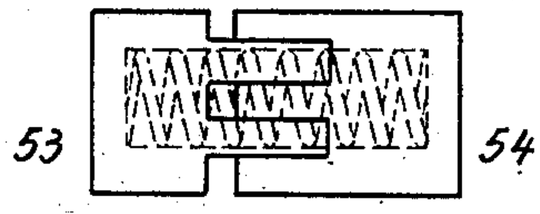

Fig. 4

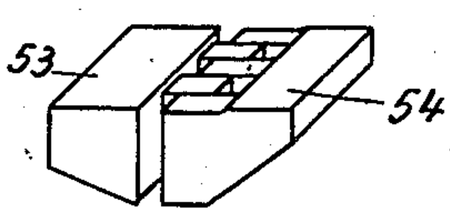

Fig. 8

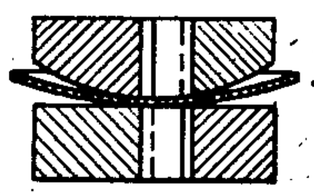

Inventor:
Hugo Junkers
by Kenidall
Atty.

Patented June 3, 1930 1,761,887

UNITED STATES PATENT OFFICE

HUGO JUNKERS, OF DESSAU, GERMANY

METHOD AND MEANS FOR UPSETTING SHEET METAL

Application filed August 3, 1925, Serial No. 47,816, and in Germany August 15, 1924.

My invention refers to sheet metal shapes (which expression is meant to comprise also endless sheet metal strips, bands, sheets and the like) and it concerns more particularly the distribution of metal in such shapes and the manner of changing the distribution of metal and at the same time also the configuration of the shape. It is a particular object of my invention to change the configuration of narrow sheet metal strips by reducing or increasing the length without producing folds in the metal.

According to the present invention this change of configuration is brought about by means of a device comprising two pairs of gripping jaws, the jaws of each pair of jaws being arranged to be pressed against each other so as to grip part of the metal and the pairs being arranged to be then moved towards or away from each other so as to upset or stretch the piece of sheet metal enclosed between them. In consequence of this mode of proceeding the strength of the material is not impaired and owing to the fact that the upsetting results in an accumulation of metal in certain parts of the strip or other shape thus acted upon certain parts can even be made stronger by this method.

In applying this invention to particularly thin sheet metal I prefer using pairs of jaws in which the jaws disposed on the same side of the sheet metal shape are formed with interlocking projections resembling combs, whereby these jaws are enabled to prevent the sheet metal from giving way during the upsetting operation. In this manner the formation of folds is rendered impossible even in the case of very thin sheet metal.

In the drawings affixed to this specification and forming part thereof several forms of a device embodying my invention are illustrated diagrammatically by way of example. In the drawings

Fig. 1 is a perspective view of two cooperating pairs of jaws arranged for rectilinear motion.

Figs. 2–4 illustrate a special kind of gripping jaws and means for operating same, Fig. 2 being a vertical section showing the jaws in position in the press before the upsetting operation. Fig. 3 is a plan view of one of the jaws, and Fig. 4 is a perspective view.

Figs. 5 and 6 are an end view and a side elevation partly in vertical section, respectively, of a device allowing simultaneous action upon several parts of the work piece.

Fig. 7 is a perspective view of gripping jaws having an undulated gripping surface.

Fig. 8 is a vertical section showing a pair of jaws, one of which has a plane, the other a curved gripping surface.

Referring first to Fig. 1, 1, 2 is a pair of jaws which can be moved or forced towards each other in the direction of the vertical arrow 3 in order to forcibly hold a piece of sheet metal between them.

4, 5 is another pair of jaws capable of relative movement in the direction of the vertical arrow 6. The two pairs of jaws are further adapted to be displaced relative to each other in the direction of the horizontal arrows 7 and 8, so as to upset a sheet metal piece held between them. In order to prevent the work piece from giving way sideways, whereby folds would be formed, the jaws are formed with tooth-like extensions 9 and 10, the extensions of one pair of jaws projecting into the gaps between the extensions of the other pair, and the abutting surfaces of these extensions being very slightly recessed in order to prevent their clamping between them that portion of the work piece which shall be upset, such upsetting being accompanied by an accumulation of metal in the upset portion. In the drawing the depth of these recesses is greatly exaggerated for the sake of clearness and in reality the recesses are very shallow.

In the modification illustrated in Figs. 2–4 the jaws 51, 52, 53, 54 have cam faces 56 on the side opposite the gripping face and the parts 57, 58 of the members, which are in contact with the jaws have corresponding cam faces, springs 59 or the like inserted between the jaws serving to keep these latter in inoperative position. Whenever pressure is exerted on the press members 57, 58 the cam faces cause the jaws to move towards each other. While the vertical forces cause the work piece to be tightly gripped between

the jaws, the horizontal forces generated by the horizontal motion of the jaws cause an upsetting of the workpiece. Obviously if the cam faces instead of sloping in outwards direction are arranged to slope inwardly, the horizontal forces resulting on vertical pressure acting on the members 57, 58 will act towards forcing the pairs of jaws outwards, whereby the work piece will be stretched.

The arrangement of cam faces on the jaws and press members as above described involves the advantage that the gripping and upsetting or stretching of the work piece is effected in one and the same operation, so that it is possible to carry out this operation by means of any ordinary pressing tool, such as a vise, a spindle press or the like. I may, however, also operate these jaws by mechanical means.

I may further arrange the jaws in such manner that the work piece can be deformed simultaneously in several places. An arrangement of this kind is shown in Figs. 5 and 6, where pairs of jaws of the kind illustrated in Figs. 2–4 are arranged in a spindle press 60 in such manner that the work piece 61 bent into U-shape can be acted upon simultaneously at its two flanges 62, 63, the pair of jaws being superposed in the modification illustrated in the drawing and an intermediate block 68 being inserted between them, both this block and the jaws being suitably guided in guides 69 in such manner that they can move in the direction of pressure and are prevented from giving way sideways.

Obviously the gripping faces of the jaws need not be plain but may be shaped as desired, to allow gripping also work pieces of irregular shape or work pieces curved in two directions. The jaws illustrated in Fig. 7 are formed with undulated surfaces to grip corrugated sheet metal strips. The pairs of jaws shown in Fig. 8 differ in the configuration of their gripping surfaces, the upper jaws having a spherical surface while the bottom jaws have a plain surface, so that metal sheet curved in different directions can be subjected to upsetting or stretching operations.

Jaws of a similar kind will allow carrying out chasing or embossing operations of all kinds.

I wish it to be understood that I do not desire to be limited to any details of configuration, operation and construction shown and described for obvious modifications will occur to a person skilled in the art.

I claim:—

1. Device for producing a change of form in a piece of sheet metal comprising two pairs of gripping jaws movable towards and away from each other and extensions on opposite edges of said pairs of jaws, the extensions of one pair of jaws projecting into the gap separating the extensions of the other pair.

2. Device for producing a change of form in a piece of sheet metal comprising two pairs of gripping jaws movable towards and away from each other, means connected with said pairs of jaws for preventing bending or folding of the sheet metal during such movement and a single means for first closing the jaws of each pair and thereafter moving said pairs of jaws relative to one another.

3. Device for producing a change of form in a piece of sheet metal comprising two pairs of gripping jaws movable towards and away from each other, converging cam faces on the surface of the jaws opposite the gripping surface, pressure exerting means and corresponding cam faces on said means.

4. Device for producing a change of form in a piece of sheet metal comprising two pairs of gripping jaws movable towards and away from each other, converging cam faces on the surface of the jaws opposite the gripping surface, pressure exerting means, corresponding cam faces on said means and means for resiliently counteracting relative motion of said pairs of jaws.

5. Device for producing a change of form in a piece of sheet metal comprising two pairs of gripping jaws movable towards and away from each other, converging cam faces on the surface of the jaws opposite the gripping surface, pressure exerting means, corresponding cam faces on said means and springs inserted between said jaws for resiliently counteracting horizontal motion of said jaws towards each other.

6. Device for producing a change of form in a piece of sheet metal comprising several units of gripping jaws, each unit comprising two pairs of such jaws, converging cam faces on the surface of the jaws opposite the gripping surface, the upper units being arranged in series, means for simultaneously exerting pressure on the jaws constituting such units and corresponding cam faces on said means.

In testimony whereof I affix my signature.

HUGO JUNKERS.