June 3, 1930. J. HASPEL 1,761,886

GARMENT SLEEVE

Filed Nov. 6, 1929

Fig. 1.

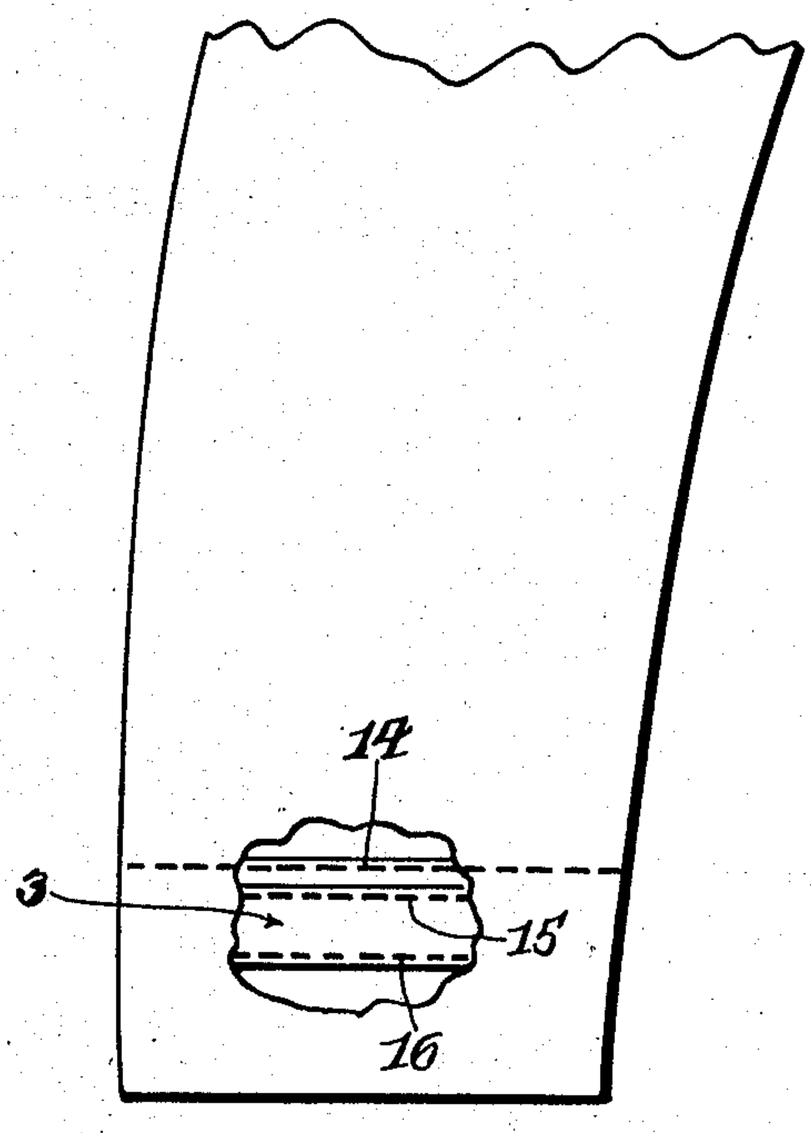

Fig. 2.

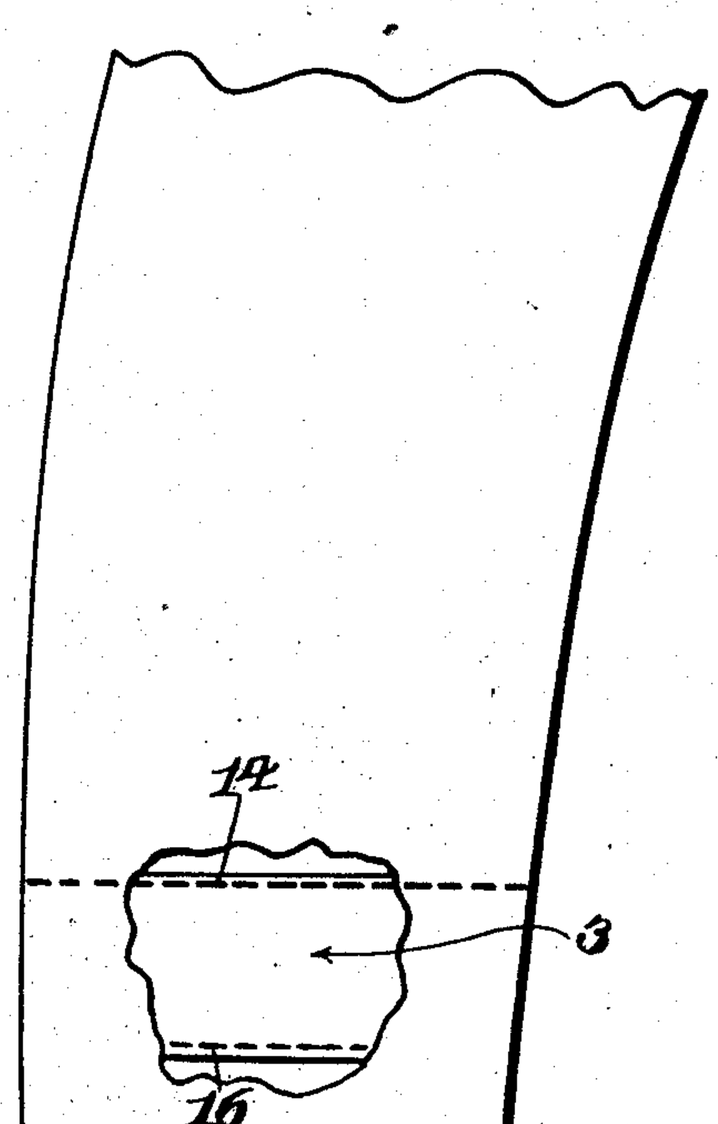

Fig. 3.

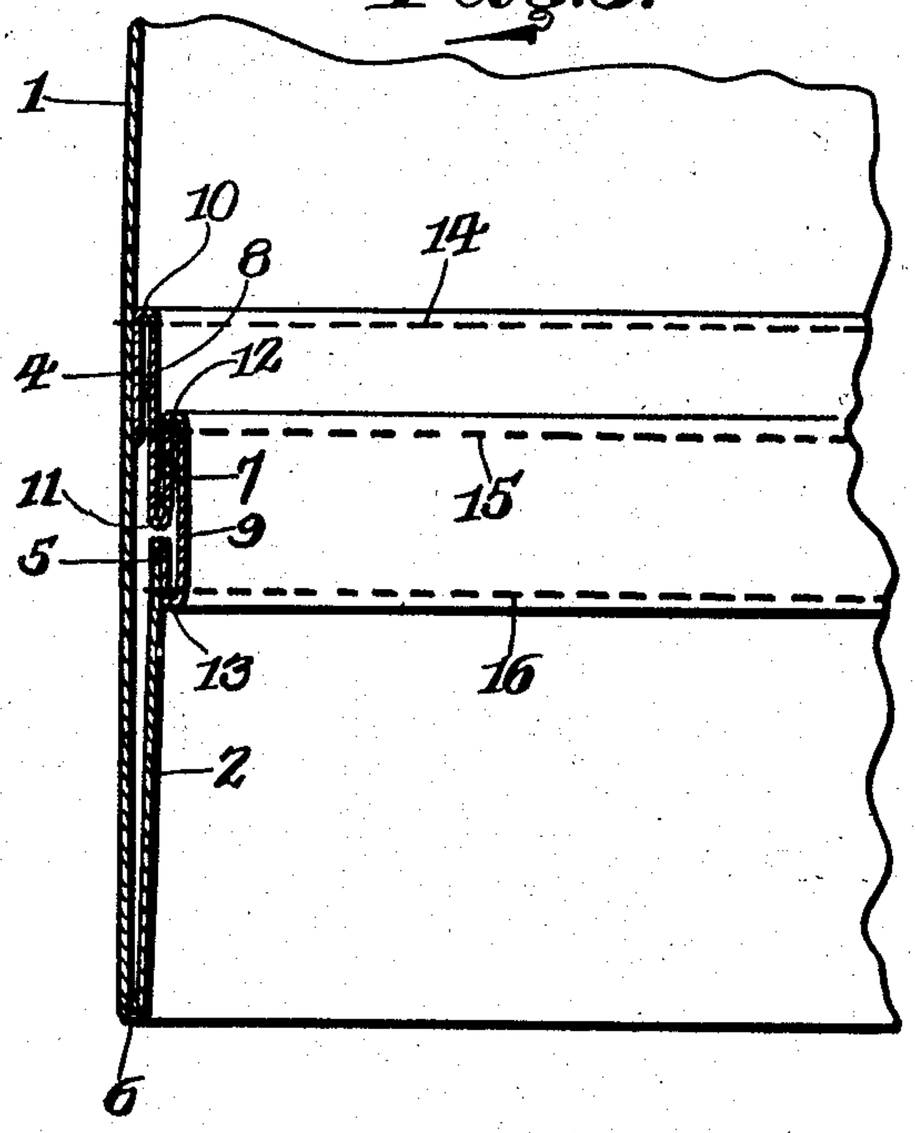

Fig. 4.

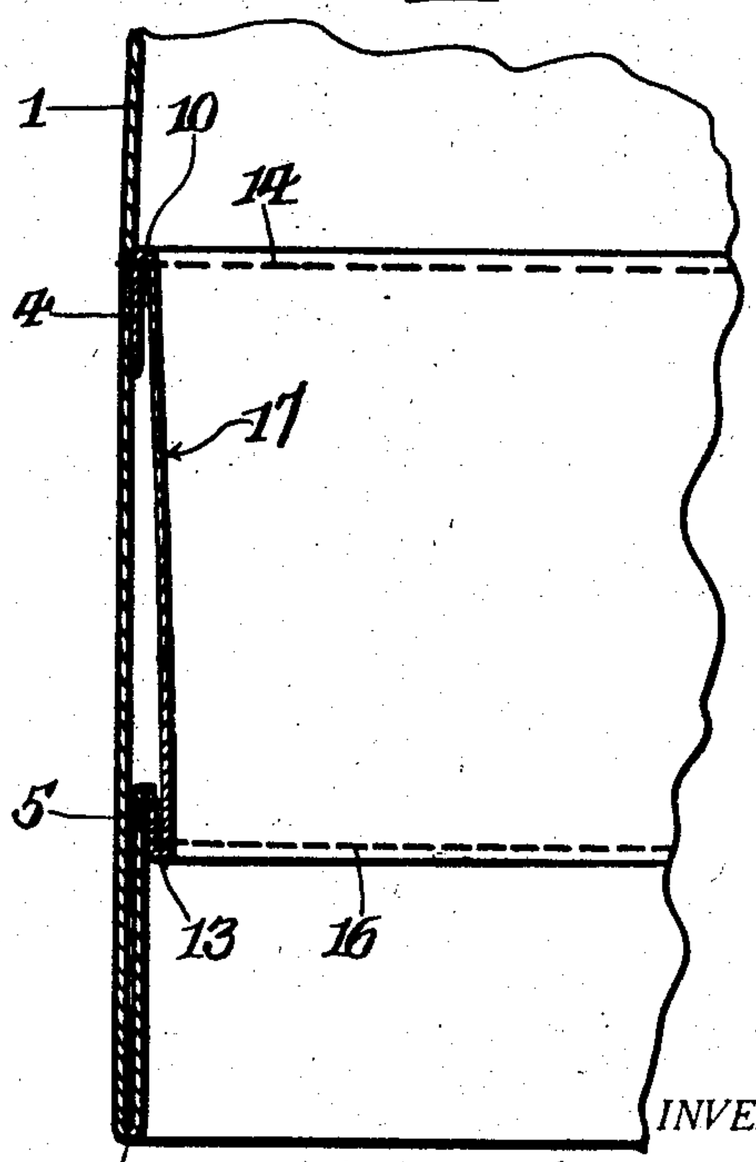

INVENTOR.

Joseph Haspel,

BY

Geo. P. Kimmel.

ATTORNEY.

Patented June 3, 1930 1,761,886

UNITED STATES PATENT OFFICE

JOSEPH HASPEL, OF NEW ORLEANS, LOUISIANA, ASSIGNOR OF ONE-THIRD TO HARRY S. HASPEL AND ONE-THIRD TO WILLIAM HASPEL, BOTH OF NEW ORLEANS, LOUISIANA

GARMENT SLEEVE

Application filed November 6, 1929. Serial No. 405,171.

This invention relates to garments, more particularly to the sleeves of coats, and has for its object to provide, in a manner as hereinafter set forth, a coat sleeve provided with means to enable expeditiously increasing the length of the sleeve when occasion requires.

A further object of the invention is to provide, in a manner as hereinafter set forth, a coat sleeve provided with an outlet member permitting of the length of the sleeve being increased when it is so desired.

A further object of the invention is to provide, in a manner as hereinafter set forth, a coat sleeve provided with an outlet member which is simple in its construction and arrangement, strong, durable, normally in a non-extended position, arranged in a manner to prevent a noticeable bulge when in non-extended position, thoroughly efficient in its use, capable of being extended to increase the length of the sleeve, readily installed with respect to the sleeve, and comparatively inexpensive to set up.

With the foregoing and other objects in view the invention consists of the novel construction, combination and arrangement of parts as hereinafter more specifically described, and illustrated in the accompanying drawings, wherein is shown an embodiment of the invention, but it is to be understood that changes, variations and modifications can be resorted to which fall within the scope of the claims hereunto appended.

In the drawings wherein like reference characters denote corresponding parts throughout the several views:—

Figure 1 is a fragmentary view of a coat sleeve, broken away and showing the adaptation therewith of an outlet member in accordance with this invention and with the member in a non-extended position.

Figure 2 is a view similar to Figure 1 with the outlet member in extended position thereby increasing the length of the coat sleeve.

Figure 3 is a fragmentary view in section looking towards the inner face of the sleeve and showing the outlet member in non-extended position.

Figure 4 is a view similar to Figure 3 with the outlet member in an extended position.

The outlet member is formed of a rectangular length of thin fabric and preferably has its body of less thickness than that of the cloth or fabric from which the sleeve is formed. The length of the strip corresponds to the combined width of the sections of the sleeve when the sections are stitched together only at one lengthwise edge thereof, also the strip is of a length corresponding to the width of a single length of material employed to form the sleeve before the lengthwise edges of the material are secured together to provide the sleeve structure.

As illustrated the sleeve 1 is of the lining-less type and is formed at its outer end with an inturned fold 2, which is a continuation of the material forming the sleeve body. The fold 2 is not secured directly to the inner face of the sleeve body.

Arranged within the sleeve 1, a substantial distance from the outer end thereof and projecting inwardly with respect to the fold 2, is an outlet member referred to generally at 3 and which corresponds in length to the width of fold 2.

The outlet member 3, as before stated, is formed of a length of thin fabric and is formed with a pair of end folds 4, 5. The fold 4 is positioned against the inner face of the sleeve 1, at a point removed from the edge 6 of the latter, the edge being provided by the bend between the body of the sleeve and the fold 2. The fold 5 is arranged against the outer face of the fold 2 at the marginal portion thereof adjacent the free edge of fold 2. The fold 5 is of less width than the width of the fold 4.

The member 3 further includes an extendible, intermediate portion which is normally in a non-extended position. The extendible portion is formed of an inner fold 7, inner coupling part 8 and outer coupling part 9. The part 8 is interposed between the folds 4, 7 and couples said folds together. The part 9 opposes the folds 5, 7 and couples said folds together. The part 8 is of slightly greater width than the part 9. The parts 8, 9 are of greater width than any of the folds 4, 5 and 7. The part 8 has a portion of its inner face opposed by fold 4 and a portion of its outer

face opposed by the fold 7. The fold 7 is offset with respect to the fold 4. The folds 5, 7 oppose the inner face of part 9. The folds 5, 7 are arranged in superposed, spaced relation.

The bend between the fold 4 and coupling part 8 is indicated at 10. The bend between coupling part 8 and fold 7 is indicated at 11. The bend between fold 7 and coupling part 9 is indicated at 12. The bend between fold 5 and coupling part 9 is indicated at 13.

A row of stitching is employed for connecting the member 3 to the sleeve body 1 and said row is indicated at 14 and is positioned in proximity to the bend 10. The arrangement of the row of stitching 14 connects part 8 to the fold 4 and the fold 4 to the sleeve body 1.

The parts 8 and 9 and fold 7 are detachably connected together by a row of stitching 15 and which is positioned in proximity to the bend 12 and extends through part 9 in proximity to its top, fold 7 in proximity to its top and part 8 substanatially at the longitudinal center thereof.

The member 3 is permanently secured to the fold 2 by a row of stitching 16 and the latter is positioned in proximity to the bend 13. The row of stitching 16 extends through the part 9, fold 5, fold 2 and is arranged in close proximity to the bottom of part 9, bottom of fold 5 and a substantial distance from the free edge of fold 2. The row of stitching 14 permanently secures the outlet member 3 against the inner face of the sleeve body 1 a substantial distance above the free edge of the fold 2.

The extendible portion provided by the fold 7 and parts 8 and 9 is referred to generally at 17, Figure 4. The portion 17 as shown in Figure 4 is as when extended and which is provided for when the row of stitching 15 is severed to release the connecting of the part 9 with the fold 7 and the connecting of the fold 7 with the part 8.

The width of the parts 8 and 9 and fold 7 can be as desired. When the portion 17 is released the body of the sleeve can be extended a distance corresponding to the width of the portion 17, or in other words, the sleeve can have an outlet corresponding to the width of the extendible portion 17 of the outlet member.

What I claim is:

1. The combination with a coat sleeve having an inwardly extending fold at its inner end free of connection with the inner face thereof, of an outlet member formed of a pair of end folds, an inner fold arranged over one of the end folds of said pair, a coupling part connecting one of the end folds of said pair to the inner fold, a coupling part connecting said inner fold to the other end fold of the pair, means for permanently securing one of the end folds of the pair to the inner face of the coat sleeve at a point removed from the free end of said inwardly extending fold, means for permanently securing the other end fold of said pair to said inwardly extending fold in proximity to the free end thereof, and means for releasably securing said coupling parts and inner fold together whereby when released the length of the sleeve will be extended.

2. An outlet member for a coat sleeve of that type having an inwardly extending fold at its free end, comprising a flexible body in the form of a strip of fabric for positioning within the sleeve a substantial distance from the outer end of the latter and formed with an inner and an outer end fold, said inner end fold adapted to be permanently secured to the sleeve at a point remote from the free end of the latter, said outer end fold adapted to be permanently secured to the fold of the sleeve, said strip including an intermediate portion opposing the end folds thereof, said portion formed of an inner fold, a coupling part extended from the latter to said inner end fold and a coupling part extending from the inner fold to said outer end fold, said inner fold and coupling parts being releasably secured together in abutting relation.

In testimony whereof, I affix my signature hereto.

JOSEPH HASPEL.