June 3, 1930. H. CORDELL ET AL 1,761,875

SOAP DISPENSING APPARATUS

Filed Sept. 23, 1926 2 Sheets-Sheet 1

Fig. 1.

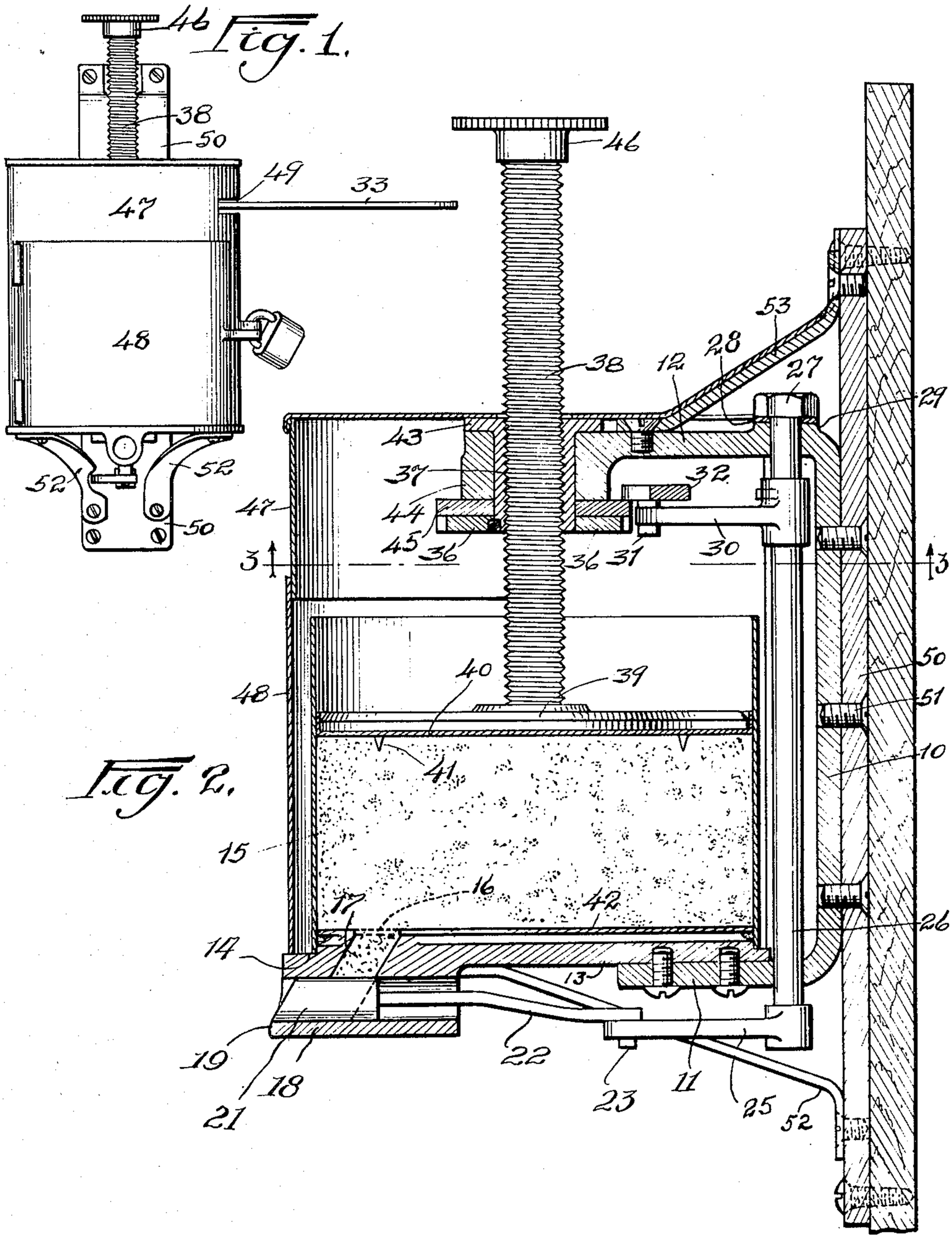

Fig. 2.

Inventors.
Henry Cordell and
Earl P. Shuttis.
By Banning & Banning & Fitly's.

June 3, 1930. H. CORDELL ET AL 1,761,875

SOAP DISPENSING APPARATUS

Filed Sept. 23, 1926 2 Sheets-Sheet 2

Fig. 3

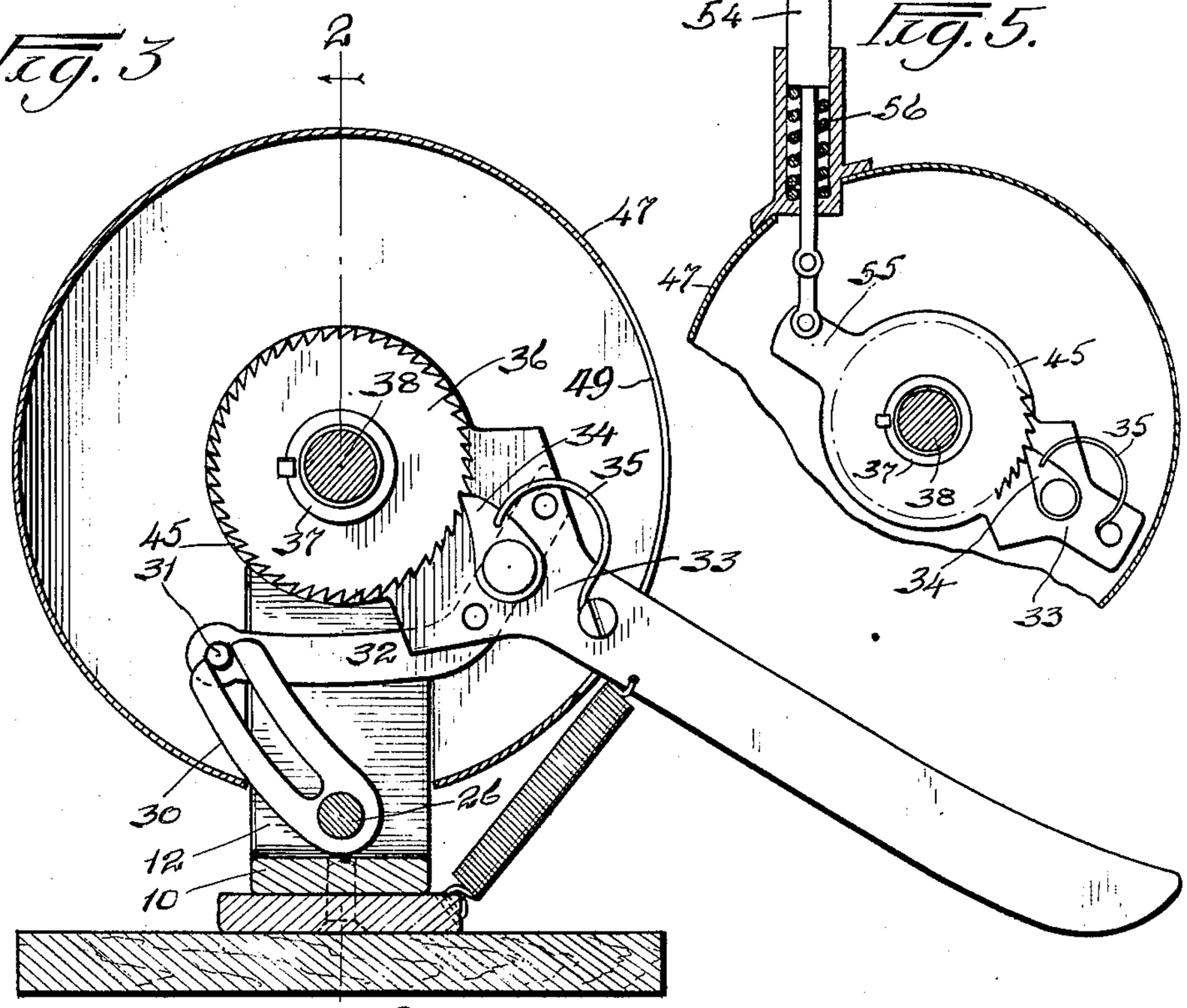

Fig. 5.

Fig. 4.

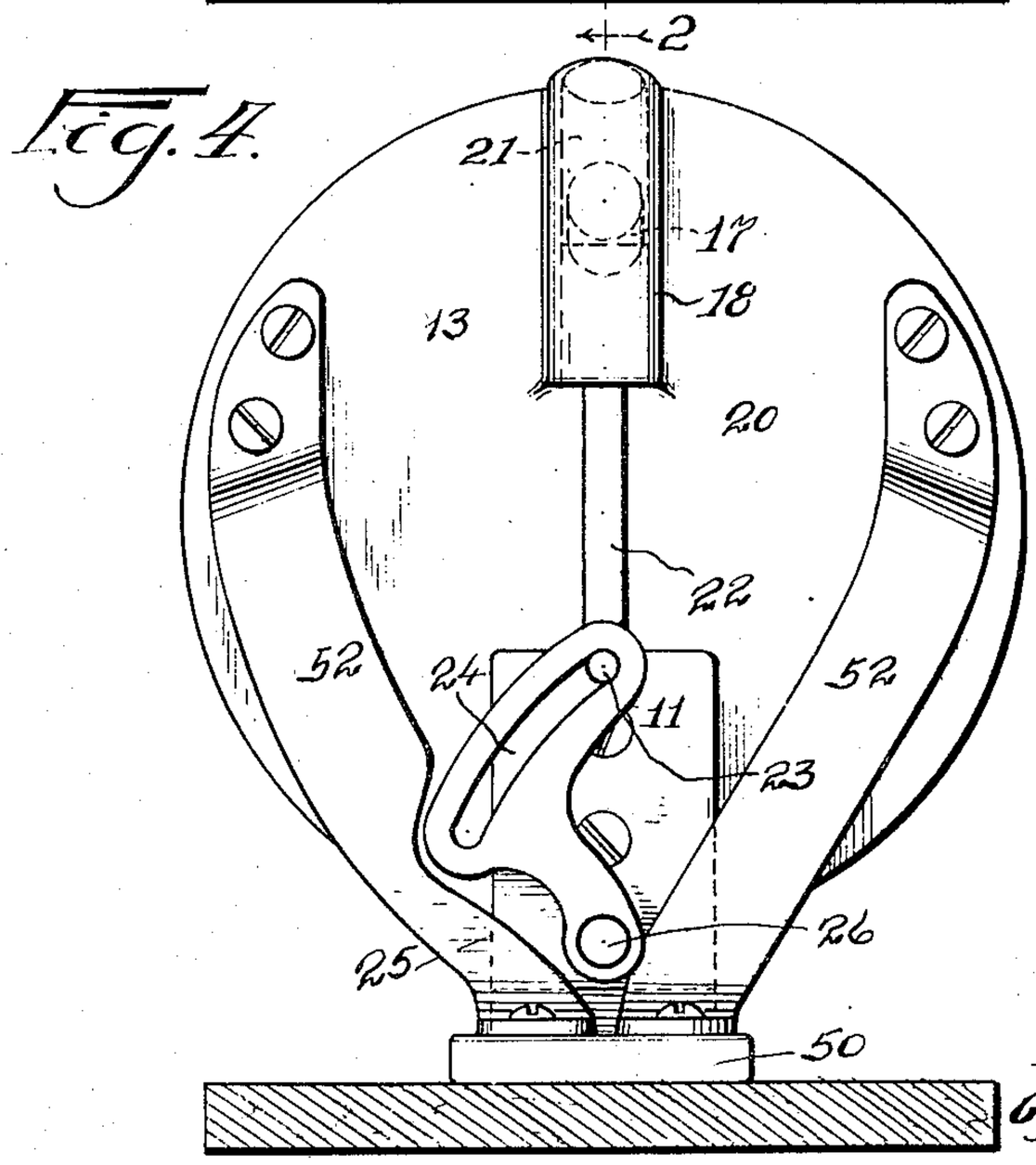

Inventor
Henry Cordell and
Earl P. Shutts.
by Banning & Banning
Attys

Patented June 3, 1930 1,761,875

UNITED STATES PATENT OFFICE

HENRY CORDELL, OF WILMETTE, AND EARL PEARL SHULTIS, OF WAUKEGAN, ILLINOIS, ASSIGNORS TO U. S. SANITARY SPECIALTIES CORPORATION, OF CHICAGO, ILLINOIS, A CORPORATION OF ILLINOIS

SOAP-DISPENSING APPARATUS

Application filed September 23, 1926. Serial No. 137,185.

This invention relates to an apparatus for dispensing soap paste or like material in measured quantities, and is intended for use particularly in public lavatories or wash-rooms where devices of this character are commonly employed.

The object of this invention is to provide a soap dispensing apparatus which may be readily charged from time to time, and to also make provision for the disabling of empty cans so that the same may not be recharged after a single use.

A further object of the invention is to so design the apparatus that pressure will be applied to the soap concurrently with the retraction of a valve permitting the charging of the spout in preparation for its final ejection by the return movement of the valve, so that the soap in a substantially determined amount will be forcibly ejected, the parts being restored to normal or closed position by the return movement of the operating handle.

Further objects and details will appear from a description of the invention in connection with the accompanying drawings wherein—

Figure 1 is a front elevation of a pressure apparatus enclosed in the casing;

Fig. 2 is a sectional elevation taken on line 2—2 of Fig. 3;

Fig. 3 is a cross sectional view taken on line 3—3 of Fig. 2;

Fig. 4 is a bottom view of the apparatus; and

Fig. 5 is a modification of the operating handle mechanism.

The apparatus as a whole is carried by a frame plate 10 provided at its lower end with an outstanding lower leg 11 and at its upper end with an outstanding upper leg 12. The lower leg 11 carries a platform 13 which is shouldered around its periphery 14 to receive a can or container 15 for the soap which is in a paste or semi-solid condition. The soap can or container is provided in its bottom with an outlet port 16 which is brought into register with a forwardly sloping discharge duct 17 which merges into a valve chamber 18 formed on the bottom of the platform 13 and extending outwardly and terminating in a mouth 19 from which the soap or similar material is ejected. The valve chamber houses a slide valve 21, the inner end of which, when thrust forward, will lie transversely of the discharge duct 17 and block the discharge of soap therefrom.

The valve 21 terminates at its rear end in a rearwardly extending rigid arm 22 which is provided with a depending pin 23 which engages with a normally diagonally disposed cam slot 24 formed in a swinging arm 25 mounted upon a vertically extending rock shaft 26 which extends through the lower and upper legs of the frame and terminates in a head 27 bearing upon a washer 28 positioned upon a boss 29 formed on the surface of the upper leg 12 near the rear end thereof. This arrangement brings the rock shaft 26 into close parallel relation to the frame plate 10 at the rear of the apparatus and outside of the soap can. The rock shaft 26 is actuated by means of a bifurcated arm 30 normally extending in oblique relation, as indicated in Fig. 3, which bifurcated arm co-acts with a pin 31 carried by an arm 32 projecting from an operating lever shaped handle 33 by which the apparatus is actuated.

The handle 33 is provided near its inner end with a dog 34 pressed inwardly by a spring 35, which dog coacts with a ratchet 36 keyed to the lower end of an internally threaded bushing 37 which meshes with an externally threaded plunger rod 38 rigidly secured at its lower end to a follower plate 39 which fits within and bears against a flanged cap 40 for the soap can, which cap bears directly against the contents of the can and serves to eject the same. In order to disrupt and destroy the utility of the can after complete ejection of a charge of soap, so as to prevent refilling, the cap is provided on its inner surface with pins 41 which serve at the termination of the travel of the cap to pierce the bottom 42 of the can and prevent reuse of the same.

The bushing 37 at its upper end is provided with a flange 43, and the bushing is journaled for rotation within a bracket head 44 formed on the inner end of the upper frame

leg 12. The bushing serves as a bearing for the inner end 45 of the lever arm 33 which allows oscillation of the lever arm about a center which is concentric with the axis of the threaded plunger rod 38. The plunger rod at its upper end has removably fitted thereto a knurled head 46 which permits a back turning of the plunger rod for the purpose of retracting the follower 39 in preparation for the positioning of a fresh can of soap.

The operating parts heretofore described are housed within a cylindrical casing 47 provided with a hinged door 48 the upper portion of which casing is provided with an elongated slot 49 which permits reciprocation of the operating lever or handle 33 and limits the throw thereof. The frame 10, as shown, is secured to a wall plate 50 by screws 51, and the platform 13 is reinforced by brace bars 52. The upper frame leg 12 is also additionally reinforced by a brace bar 53, although these details may be changed or modified, as desired, and the entire frame structure and housing cast as a unit. As shown in Fig. 5, the operating lever may be shortened and a push button 54 employed which is connected with a short lever arm 55, and serves to rock the same, a spring 56 serving to restore the parts to normal position.

In use, the follower 39 is retracted to its uppermost position by a turning of the knurled head 46. As the plunger rod is turned, it will thread back through the bushing 37 which will be held against rotation by the spring contact of the dog 34, but after the plunger has been completely retracted to bring the follower 39 into contact with the under face of the ratchet 36, the ratchet will begin to turn despite the spring pressure of the dog in an anti-clockwise direction, as viewed in Fig. 3. This will limit the upfeeding of the follower which, of course, will travel upwardly only so long as the threaded bushing 37 maintains a non-rotative relation, and this arrangement prevents an overturning of the parts.

After the follower has been retracted, a can of soap will be inserted in position to bring its outlet port into register with the discharge duct, and the plunger rod 38 will then be screwed down into easy contact with the cap of the can, after which it is desirable to remove the knurled head 46 so that the plunger rod 38 cannot thereafter be easily operated save by the action of the dog and ratchet. The parts are now in condition for the measured dispensing of the soap.

With the dog and operating lever in the position shown in Fig. 3, the lever will be thrust forward to the limit of the slot 49, and this will rotate the ratchet and with it the threaded bushing which will thus turn around the threaded plunger rod, which latter will be frictionally held against rotation by contact of the follower 39 with the cap of the can. This results in a down feeding of the plunger rod which applies pressure to the mass of soap within the can or container, and concurrently with the application of pressure, the pin 31 on the arm 32 will swing the bifurcated arm 30 which rocks the shaft 26 so that, during the forward movement of the operating handle, the valve 21 will be retracted, and the soap subjected to pressure from behind will be forced down through the discharge passage 16 and into the valve chamber in advance of the retracted valve. On the return movement of the handle the slide valve will be restored to its closing position, and will act as a plunger to eject the measured quantity of soap previously forced down, into the hand of the user for washing purposes. Thereafter, with every operation of the machine, a charge of soap forced into the valve chamber will be ejected so that the apparatus will always act to eject a measured quantity of soap with each operation of the handle.

The swing or thrust of the handle should be adjusted to the proper degree to apply sufficient pressure in each case to fill up the terminal portion of the spout without imposing such a high degree of pressure as would tend to cause an ejection of soap by pressure from above prior to the advance of the plunger valve. Such regulation of the amplitude of movement can be effected by making the slot 49 of proper length to accommodate the desired movement of the lever, although other means for limiting such movement may be employed.

The device is one which co-ordinates the feeding and discharging movements in such a way as to effect a uniform and certain discharge of the soap, and prevents a dribbling down and wasting of the soap which might take place if adequate means were not provided for relieving the soap in the mouth of the spout 17 from the pressure of the soap column above, but by provision of the valve plunger 21, the soap in the spout will be positively segregated from the mass of soap above and positively ejected, so that such wasteful discharge will be prevented.

We claim:

1. In a dispensing apparatus of the character described, the combination of a shouldered platform having a discharge duct, a container adapted to contain a semi-solid substance and having one end arranged to be secured on the shoulder of said platform, a plunger operable within said container to apply pressure to the material therein contained, a handle and connections for imparting a predetermined down feeding movement to the plunger with each operation of the handle, the container at its bottom communicating with said discharge duct, a valve chamber extending transversely of the discharge duct, a plunger valve operable within said chamber and across the mouth of said duct and adapt-

ed when retracted to permit down flow of material into said chamber in advance of the plunger and adapted when thrust forwardly to eject the previously deposited charge of material and cut off the further flow of material through the duct, and means connected with the handle for retracting the plunger valve during the initiatory movement of the handle and adapted to advance the plunger valve during the final movement of the handle, substantially as described.

2. In a dispensing apparatus of the character described, the combination of a platform having a discharge duct, a container secured thereon and adapted to contain a semi-solid substance, a plunger operable within said container to apply pressure to the material therein contained, a horizontally swinging handle and connections for imparting a predetermined down feeding movement to the plunger with each operation of the handle, the container near its bottom communicating with said discharge duct, a valve chamber extending transversely of the discharge duct, a plunger valve operable within said chamber and across the mouth of said duct and adapted when retracted to permit down flow of material into said chamber in advance of the plunger and adapted when thrust forwardly to eject the previously deposited charge of material and cut off the further flow of material through the duct, a rock shaft extending exteriorly of the container, a pin and slot connection between said rock shaft and said handle, and connections between said rock shaft and said plunger valve for retracting the plunger valve during the initiatory movement of the handle and advancing the plunger valve during the final movement of the handle, substantially as described.

3. An open can for use in connection with dispensing apparatus consisting of a surrounding imperforate wall, a removable imperforate cover having a flange in close sliding engagement with said wall, and a flat bottom having a depending flange around its margin whereby the bottom of the can may be supported freely above the lower edge of the flange, said bottom having a discharge port formed therein, substantially as described.

4. A can for use in connection with dispensing apparatus consisting of a surrounding imperforate wall, an imperforate flat cover having an outwardly turned flange in close sliding engagement with said wall, and having a perforating projection depending from the inner face of the cover, and a flat bottom having a depending flange formed around its margin whereby the bottom of the can may be freely supported above the lower edge of the flange, substantially as described.

5. A can for use in connection with dispensing apparatus consisting of a surrounding imperforate wall, an imperforate flat cover having an outwardly turned flange in close sliding engagement with said wall, and having a perforating projection depending from the inner face of the cover, and a flat bottom having a depending flange formed around its margin whereby the bottom of the can may be suported freely above the lower edge of the flange, the bottom having a discharge port formed therein, substantially as described.

6. In a dispensing apparatus of the character described, the combination of a platform having an annular flange, a raised portion within said annular flange and containing a discharge duct, a container adapted to contain a semi-solid substance and having a flat bottom containing a discharge port adapted to register with said discharge duct, a flange depending below said bottom and adapted to secure the can upon the annular shoulder of the platform with the bottom raised above the platform and in contact with said raised part containing the discharge duct, a plunger operable within said container to apply pressure to material therein contained, a valve mechanism for controlling said discharge duct, a handle, and operative connections between said handle and plunger for depressing said plunger and between said handle and valve mechanism, substantially as described.

7. In combination, a can comprising a surrounding imperforate wall, an imperforate cover having a flange in close sliding engagement with said wall, and a flat bottom having a depending flange around its margin whereby the bottom of the can may be supported freely above the lower edge of the flange, said bottom having a discharge port formed therein, and a dispensing apparatus comprising means adapted to apply inward pressure on said imperforate cover and supporting means adapted to support said flange and bottom, said means being provided with an opening adapted to register with said discharge port.

HENRY CORDELL.
EARL PEARL SHULTIS.