June 3, 1930. W. D. WALKER 1,761,853

STARTING MOTOR CONTROL MECHANISM

Filed Aug. 17, 1925

Fig. 1.

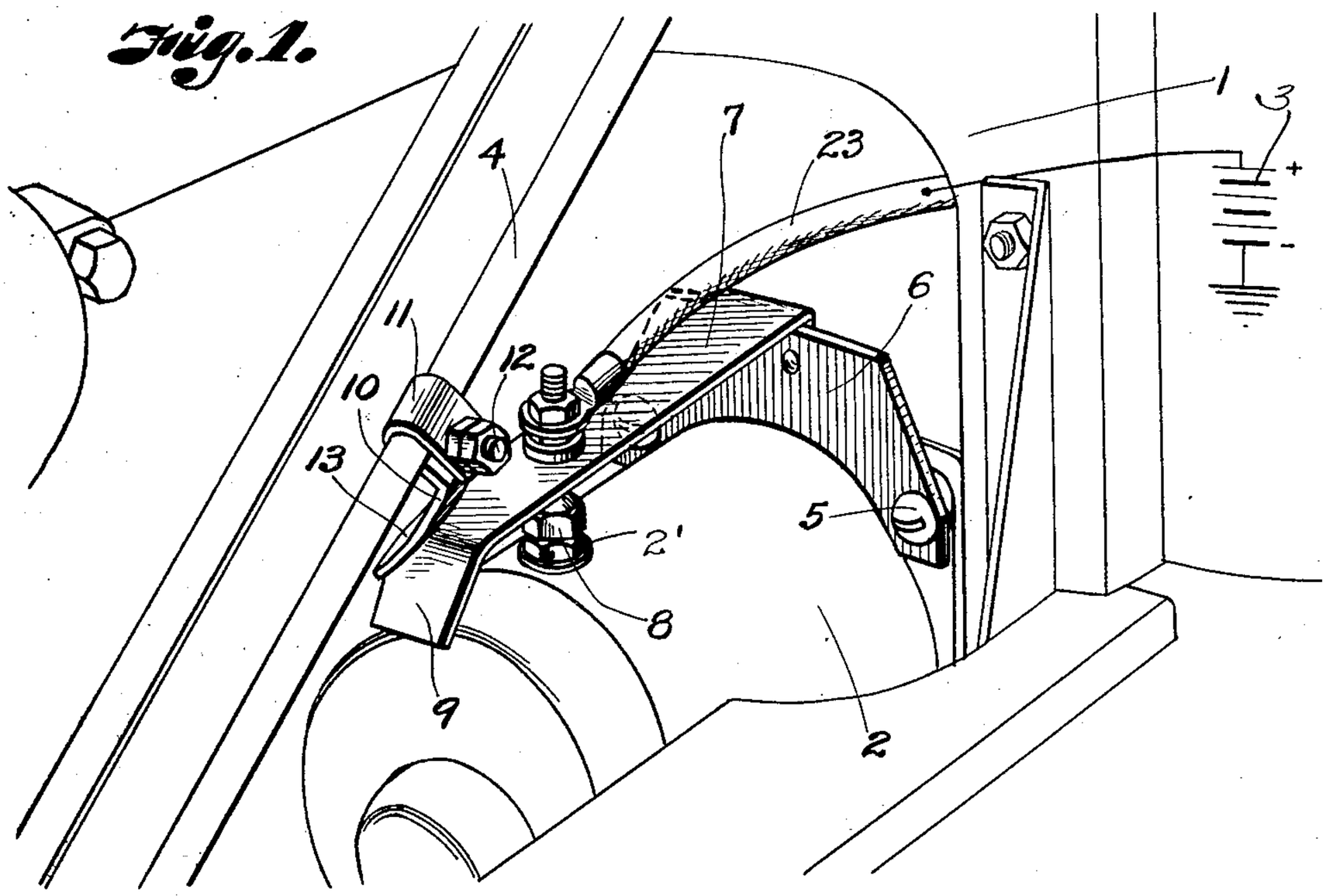

Fig. 2.

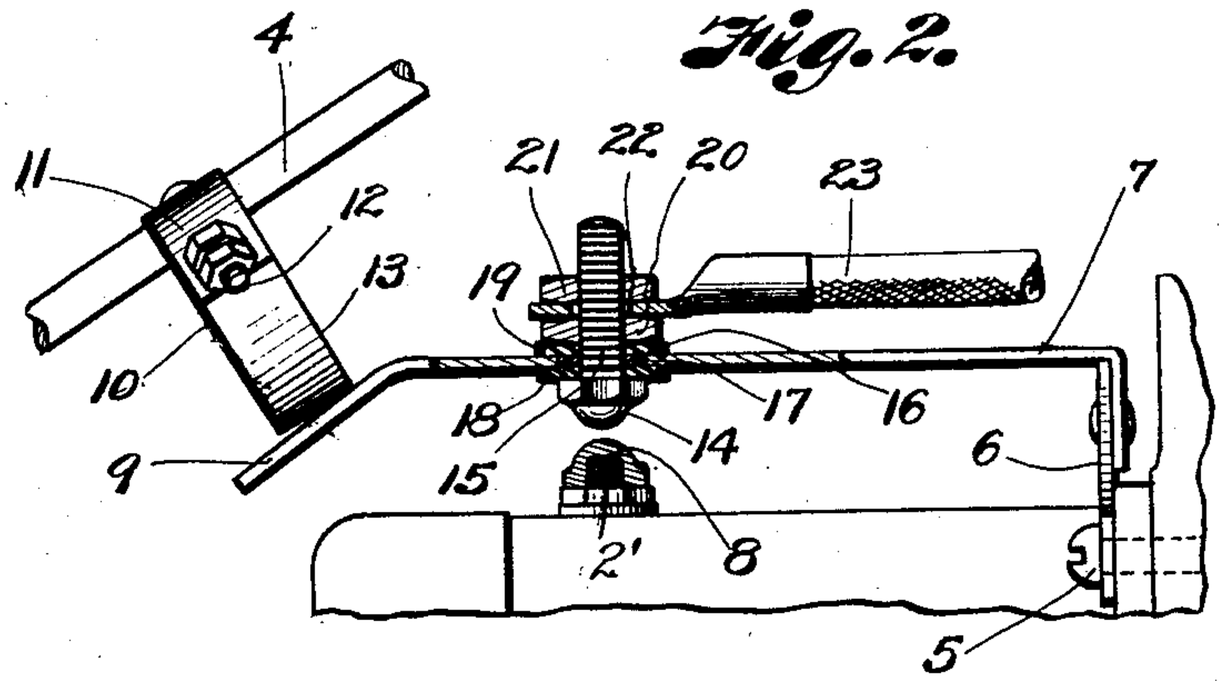

Fig. 3.

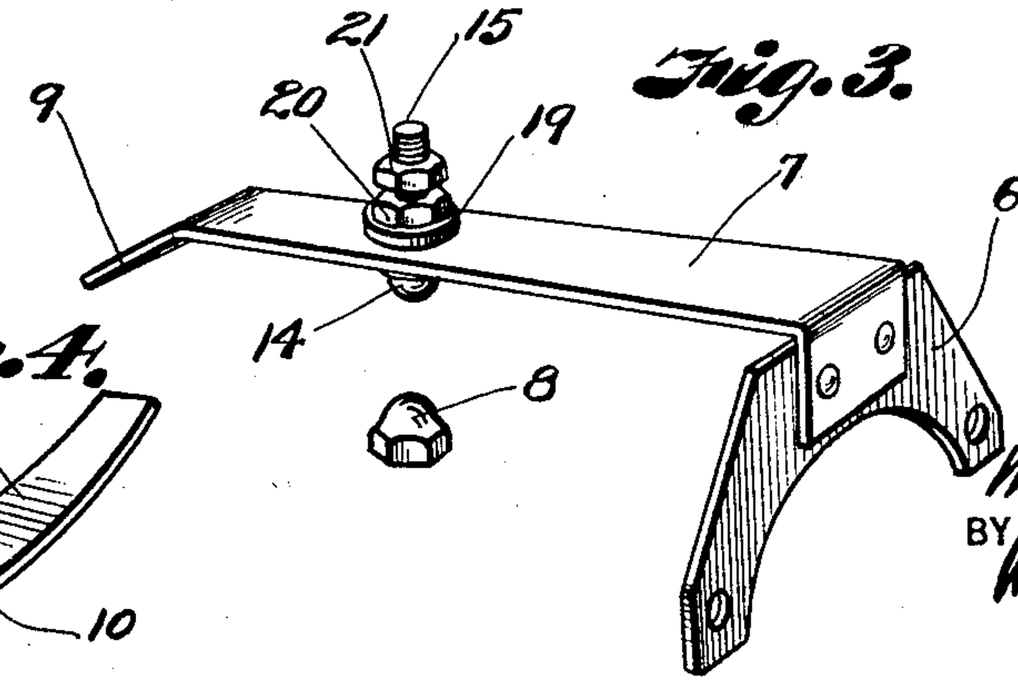

Fig. 4.

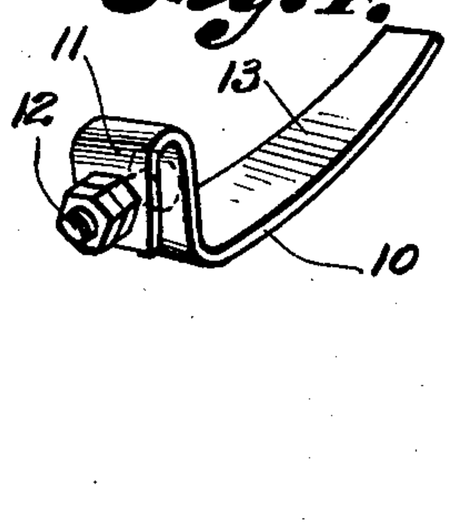

INVENTOR
William D. Walker
BY Arthur C. Brown
ATTORNEY

Patented June 3, 1930 1,761,853

UNITED STATES PATENT OFFICE

WILLIAM D. WALKER, OF KANSAS CITY, MISSOURI

STARTING-MOTOR-CONTROL MECHANISM

Application filed August 17, 1925. Serial No. 50,696.

My invention relates to starting switch controls and more particularly to a device for use in connection with the operative mechanism of motor vehicles of the Ford type, to permit operation of the starting motor only when the ignition for the main motor is set for a retarded spark, the principal object of the invention being to prevent damage to the starting motor from back-fire, which not infrequently occurs when the starter is operated while the ignition mechanism is set for an advanced spark.

In accomplishing this object I have provided improved details of structure, the preferred forms of which are illustrated in the accompanying drawings, wherein:

Fig. 1 is a perpective view of a portion of a motor vehicle, including a starting motor and spark controlling lever rod of conventional form and illustrating my improvements applied thereto.

Fig. 2 is a longitudinal view of a portion of the starting motor and spark lever rod with my control mechanism applied thereto, a portion of the control mechanism being broken away to illustrate the electrical connection.

Fig. 3 is a detail perspective view of the contact arm and its mounting.

Fig. 4 is a detail perspective view of the brush for actuating the contact arm.

Referring more in detail to the drawings:

1 designates a portion of the motor vehicle, 2 a starting motor, and 3 a battery of any conventional type, permanently mounted on the frame of the vehicle in any suitable manner. 4 designates a part of the spark lever rod which extends from the steering wheel (not shown) in the usual manner and in such proximity to the starting motor as to provide cooperative relationship between the elements of the control mechanism hereinafter described.

Fixed to the frame of the vehicle, adjacent the starting motor, preferably by screws 5, is a mounting plate 6, carrying a spring arm 7, which extends over the motor 2 and particularly over a contact member 8 grounded on the starter housing and through which current is passed to the starting motor from the battery when proper contacts are made, the end of the arm 7 having a down-turned lip 9 at its free end for engagement by a brush 10 that is rigidly fixed to the spark lever 4.

The detail construction of the brush 10 is preferably that shown in the drawings; comprising a single piece of strap metal formed into a U 11 which fits over the rod and is securely attached thereto by a bolt 12, one end of the strap being extended downwardly and curved, as at 13, to provide for wiping contact thereof with the curved lip 9 on the flexible arm 7 of the mating control member.

The arm 7 carries a contact member 14 directly over the contact member 8 on the starter housing, the member preferably consisting of a bolt 15 which extends through a non-conductive bushing 16 in an opening 17 in the arm 7, and through non-conductive washers 18 and 19 above and below the arm 7 to insulate the bolt from the arm, the bolt and washers being held securely to the arm by a head 14 and a nut, the latter being located above the upper washer 18 and in conductive relation to the bolt 15.

Interposed between the nut 20 and a similar nut 21 on the bolt 15 is the terminal ring 22 of a circuit wire 23 leading to the battery, so that current may be conducted from the battery to the starting motor when connection is made between the contacts 8 and 14.

In this preferred construction the contact member 8 consists of a female stud that is removably applied to the standard stud 2′ on the starting motor and the contact member 14 of a bolt which may be removably mounted on the spring arm. Consequently, either of the contact members may be replaced should they become oxidized or otherwise unfit for use.

Assuming the parts to be constructed and assembled as described, and the curvature of the lip 13 of the brush arm 10 being such as to retard contact of the starter contacts until the spark lever has been turned sufficiently in a clockwise direction to insure a retarded spark in the main motor, the operation and use of the device is as follows:

When it is desired to start the vehicle motor the operator first pulls his spark lever in a clockwise direction, which is the direction in

which it must be turned to retard the spark, such turning of the lever throwing the brush arm 13 into contact with the lip on the end of the resilient arm 7 and bending the arm downwardly toward the starting motor until the contact point 14 on the arm contacts the point 8 on the motor, whereupon a circuit is closed through the motor and battery which energizes the starting motor so that it can perform its function of starting the main motor.

When the main motor is started the spark is advanced by rotating the spark control lever in an anti-clockwise direction, this spark-advancing operation removing the brush arm 13 from contact with the flexible arm 7 and permitting the arm to return to normal position, thereby opening the circuit through the starting motor and discontinuing operation of the latter.

By controlling the starting motor through the spark lever, damage to the starting motor because of back-fire induced by an advanced spark is obviated and a more compact arrangement of parts is afforded because of the elimination of separate lever mechanism for the starting motor.

Should either of the contact points (but particularly the point 8) become oxidized, or otherwise unfit for use, it may be removed and replaced by a fresh point without material expense or inconvenience.

What I claim and desire to secure by Letters Patent is:

In an automobile starting motor control switch, a bracket comprising a plate secured to the frame of the automobile in spaced relation with said motor and a flexible arm normally spaced from the motor and having a downwardly inclined free end, a contact carried by said arm, and a cam-like finger on the spark control rod of the automobile movable into wiping engagement with said inclined free end when the rod is turned in spark retarding direction for flexing the arm to move said contact into engagement with the stationary contact of the starting motor.

In testimony whereof I affix my signature.

WILLIAM D. WALKER.