June 3, 1930. G. E. VANCE 1,761,852

SECTIONAL RING GRINDER

Filed Jan. 16, 1928

FIG 1

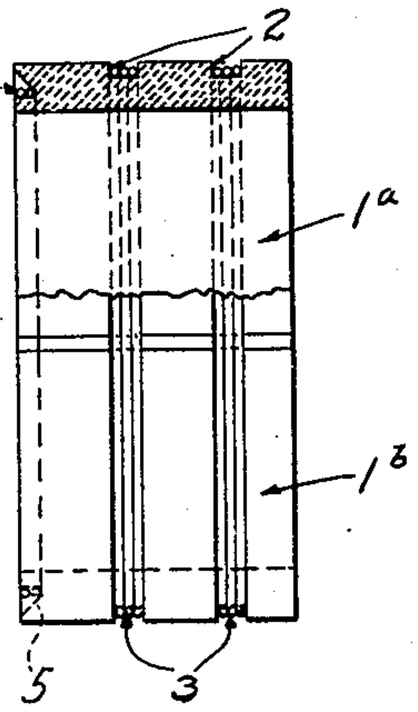

FIG 2

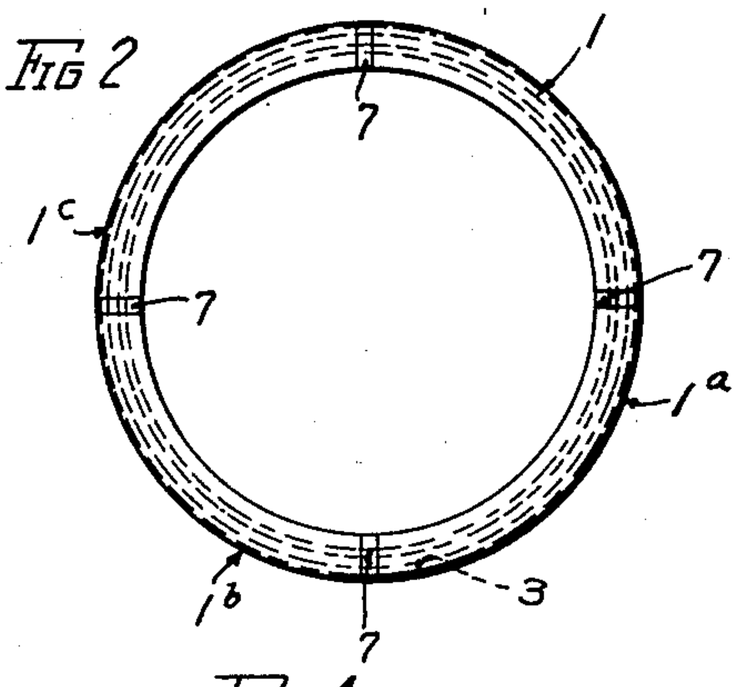

FIG 3

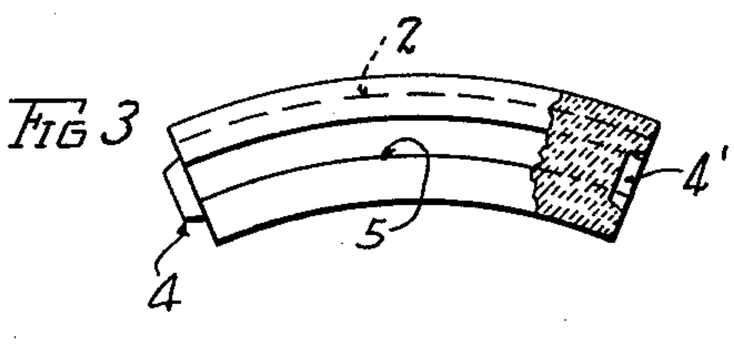

FIG 4

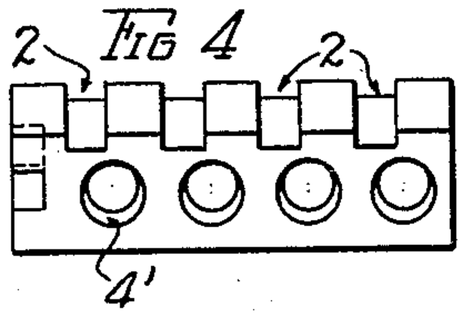

FIG 5

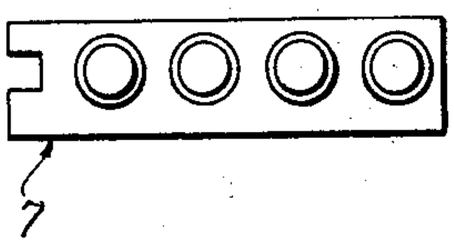

FIG 6



FIG 7

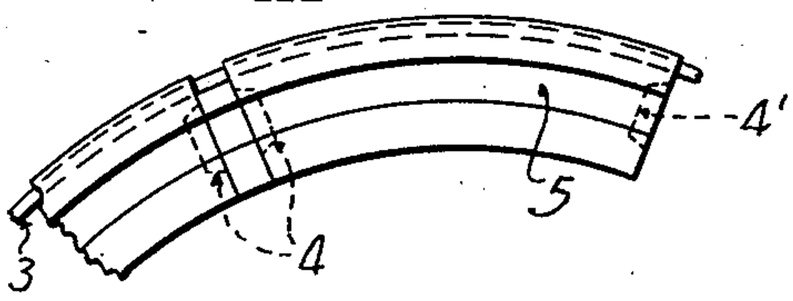

FIG 8

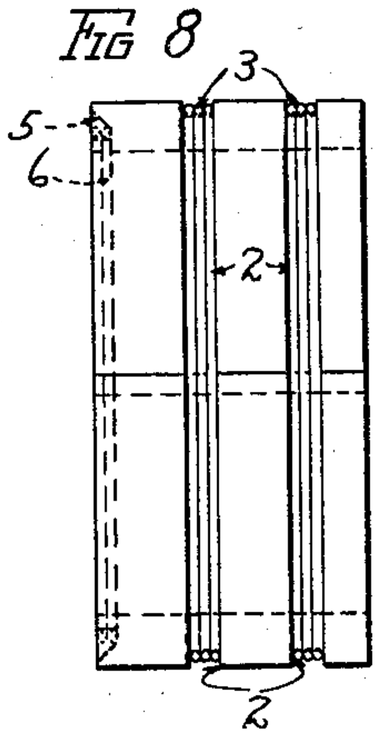

FIG 9

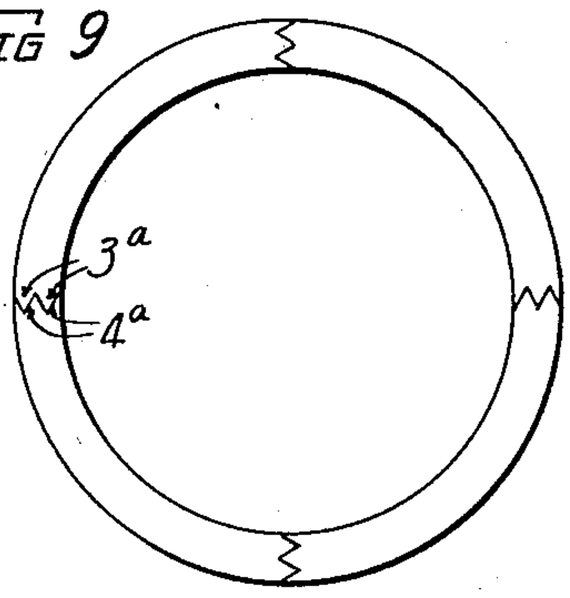

Inventor

George E. Vance

By Staley & Welch

Attorneys

Patented June 3, 1930 1,761,852

UNITED STATES PATENT OFFICE

GEORGE E. VANCE, OF SPRINGFIELD, OHIO, ASSIGNOR TO THE SAFETY GRINDING WHEEL & MACHINE COMPANY, OF SPRINGFIELD, OHIO, A CORPORATION OF OHIO

SECTIONAL RING GRINDER

Application filed January 16, 1928. Serial No. 247,006.

My invention relates to sectional grinding wheels which are made in the form of a ring grinder and in which the segments are secured firmly together by means which will resist the strains tending to displace the segments in use, particularly in an axial direction.

My invention relates particularly to improvements in the ring grinder shown in my prior Patent No. 1,642,096 of September 13, 1927.

The invention consists in the constructions and combinations and parts hereinafter described and pointed out in the claims.

In the accompanying drawings:

Fig. 1 is a side elevation partly in section of my sectional grinding wheel.

Fig. 2 is an end view of the same.

Figs. 3, 4, 5, 6 and 7 are detail views of the various sectional parts showing the manner of joining the sections together.

Figs. 8 and 9 are respectively a side elevation and detail of a modification.

The ring grinder is made up of a series of segments 1, 1ª, 1ᵇ, etc. of arcuate form and having on their outer periphery grooves 2. The segments extend the full length of the grinding element so that the meeting lines between the same are parallel to the axis of rotation. These segments are formed at their respective ends with interengaging parts or lugs and when assembled they are held in position by suitable metal clamping devices 3 which lie wholly within the grooves 2.

The individual sections are formed at their ends with interengaging parts in the nature of lugs 4 preferably of a truncated cone form and corresponding recesses 4′ which are fitted together prior to the time that the clamping devices are inserted in the peripheral grooves. When the sections are thus interlocked they are held against independent movement radially and axially.

There is also preferably provided at one end of the assembled ring the groove 5 in which is located a metal ring 6 which can be secured into the groove by cementing it therein by sulphur or some suitable cement.

In some instances I preferably provide intermediate or spacing sections 7 which fit between the sections 1, 1ª, 1ᵇ, etc. as shown more clearly in Figs. 5 and 6. When these intermediate spacing sections are used they are preferably made of somewhat softer material than the main sections so that in use a clearance space is provided between the segments. When these spacing segments are used they are provided on the side with lugs or recesses to fit in corresponding recesses or lugs on the main segments. By the use of these segments having interengaging parts on the clamping devices and peripheral grooves on the surface of the ring I provide a ring in which the segmental parts are held firmly against displacement both radially and axially.

This type of grinder is generally used for grinding surfaces or other parts where the end of the cylindrical ring or wheel is used for the grinding action and as it is worn away to one of the peripheral grooves the clamping parts may be removed and a new grinding surface presented. By preventing independent axial movement of the segments in the manner described an unbroken grinding surface is insured.

Figs. 8 and 9 illustrate a modification in which the engaging parts are formed in the nature of serrations or V-shaped ribs 3ª extending longitudinally of the segments and engaging with corresponding V-shaped recesses or grooves 4ª in the adjacent segments or parts.

Having now described my invention what I claim as new and desire to secure by Letters Patent is:

1. A grinding wheel having a series of segments, the meeting lines of which extend parallel to the axis of the wheel, means for holding said segments against radial displacement, and means for holding said segments against axial displacement relatively to each other consisting of overlapping radially-disposed faces between said segments to prevent independent axial displacement of the segments.

2. A grinding wheel having a series of segments assembled in ring form with a meeting line between the segments extended in an axial direction, means for holding said

segments against radial displacement, and interlocking parts between the meeting edges of said segments consisting of truncated cone-shaped members engaging corresponding recesses in the adjacent segments.

In testimony whereof, I hereunto set my hand this 10th day of January, 1928.

GEORGE E. VANCE.