June 3, 1930. W. V. VAN ETTEN 1,761,807

ROLLER SKATE

Filed Nov. 24, 1928

Fig. 1

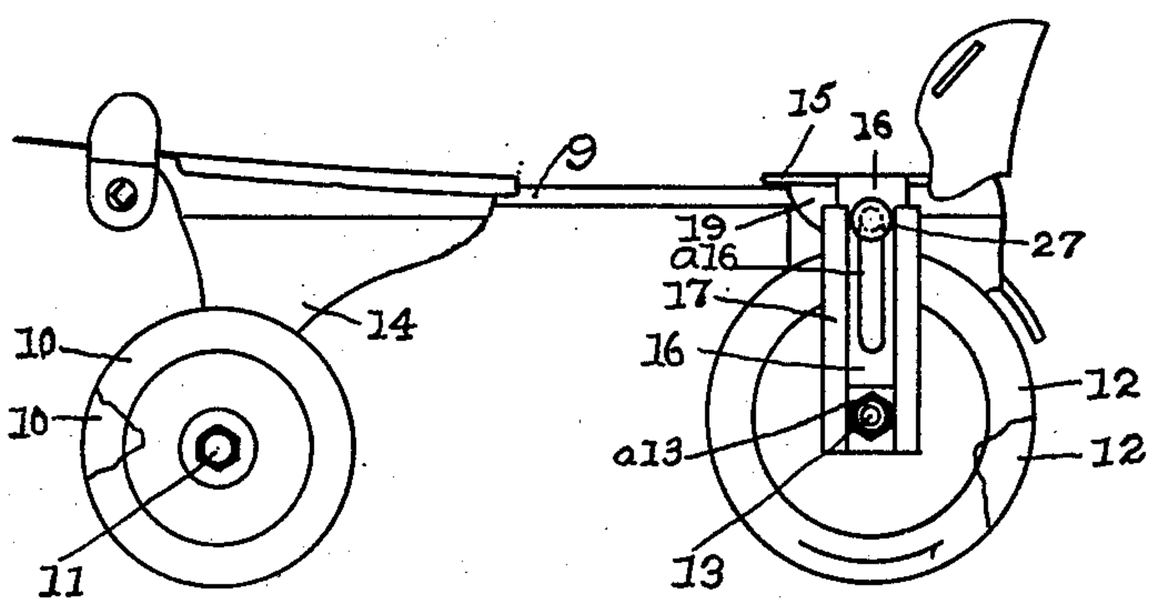


Fig. 2

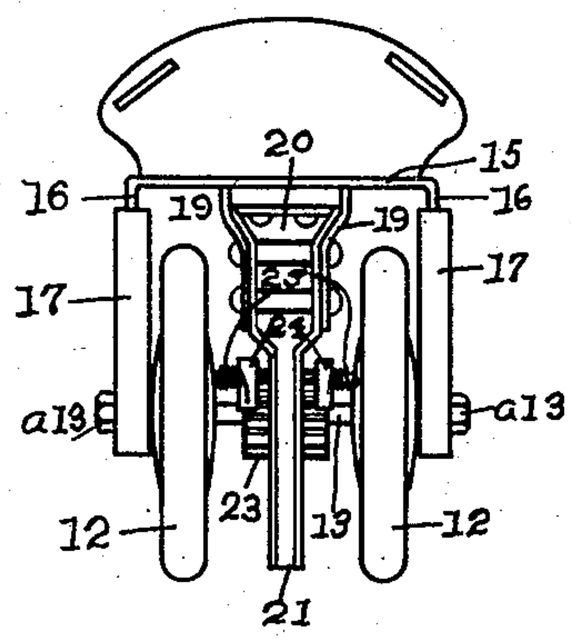


Fig. 3

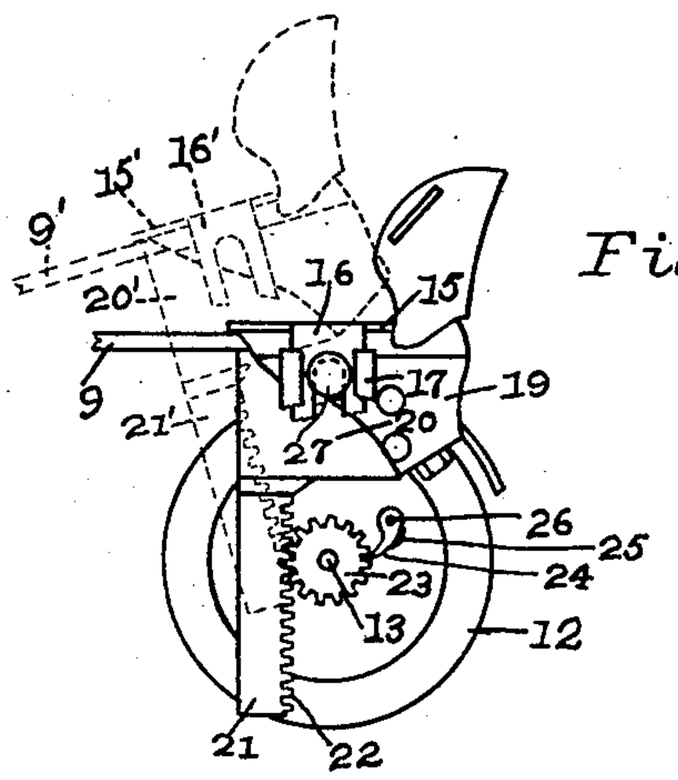


Fig. 6

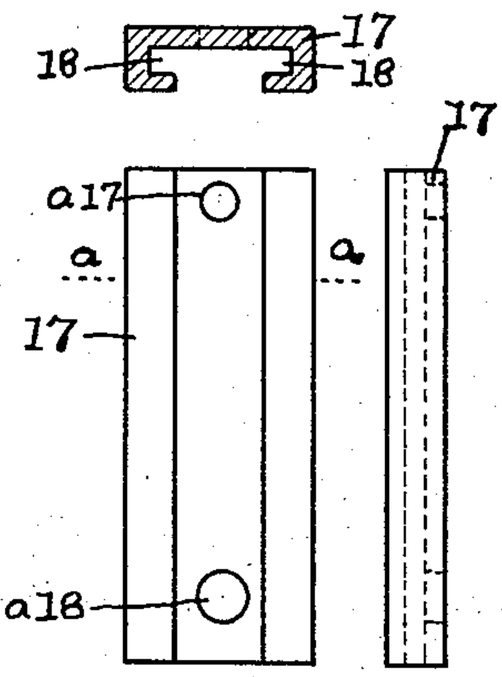


Fig. 8

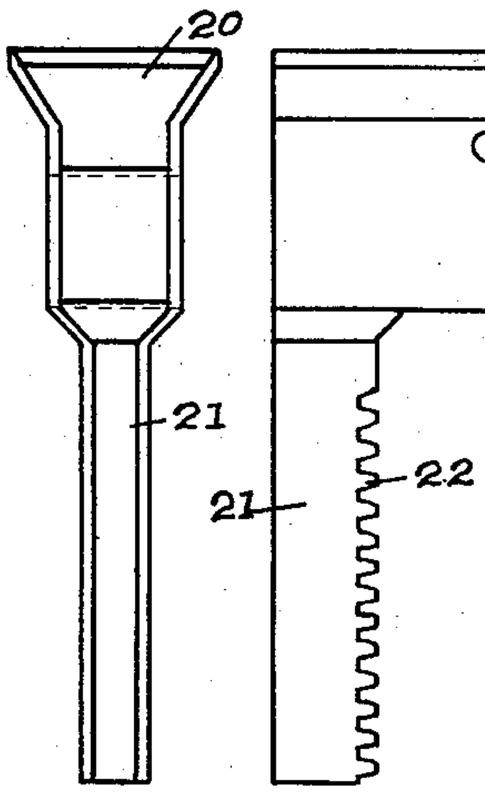


Fig. 7

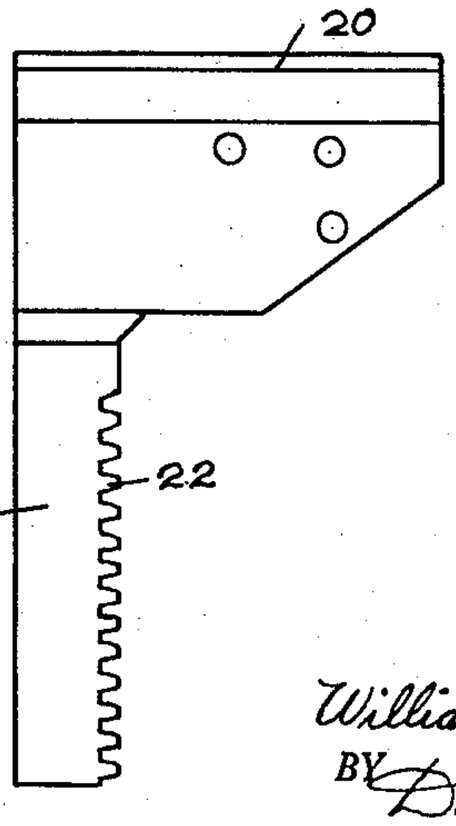


Fig. 4 Fig. 5

INVENTOR,
William V. Van Etten.
BY David E. Lain,
ATTORNEY.

Patented June 3, 1930 1,761,807

# UNITED STATES PATENT OFFICE

WILLIAM V. VAN ETTEN, OF BELLINGHAM, WASHINGTON

## ROLLER SKATE

Application filed November 24, 1928. Serial No. 321,572.

My invention relates to improvements in roller skates, and has for an object to provide roller skate mechanism which causes the weight of the user to aid in propulsion.

Another object of my improvement is to provide said mechanism of simple, durable and not expensive character making it possible for the user to drive the skates in the ordinary way quite entirely, by using his own weight entirely or by combining the usual and the new ways of propulsion.

Other objects of my improvement will appear as the description proceeds.

I attain these and other objects of my improvement with the mechanism illustrated in the accompanying sheet of drawings, which form a part of this specification, in which Figure 1 is a side elevation of one of my skates with the weight-propelling mechanism in place thereon, Fig. 2 is a rear view of Fig. 1, Fig. 3 is a view similar to Fig. 1 with the front end and one of the rear wheels and guide members broken away, Fig. 4 is a side elevation of one of two similar guides, Fig. 5 is an edge elevation of Fig. 4, Fig. 6 is a transverse view of Fig. 4 in section on the line *a*—*a*, Fig. 7 is a side elevation of the toothed rack segregated, and Fig. 8 is an edge elevation of Fig. 7. Figs. 4—8 are drawn on a larger scale.

Similar characters refer to similar parts in the several views. Certain parts are broken away to show others hidden thereby.

With more particular reference to the designated parts: The skate frame has base 9 to which is connected front wheels 10, 10 which are mounted for revolution on front axle 11. Axle 11 is fastened to front bolster 14.

Rear wheels 12 are mounted loose for revolution on rear axle 13 the ends of which are fastened to the lower ends of side guides 17, 17 by being extended through holes $a^{18}$ therein and secured in place by nuts $a^{13}$.

A plate 15 is fastened on top of base 9 near the rear end thereof and has slides 16, 16 projecting from each end thereof and bent downward at right angles to depend therefrom in engagement with grooves 18 in side guides 17, 17. Each of slides 16 has a longitudinal slot therein with which is engaged stop screw 27. This screw is secured in a tapped hole $a^{17}$ near the top of guide 17 and prevents slide 16 from disengaging therefrom when at its extended limit.

Two dependent side plates 19, 19 are fastened to the bottom of the rear end of base 9 and to the shank 20 of rack 21 to fasten said rack to the skate frame. Gear and ratchet pinion 23 is mounted loose for revolution on rear axle 13 between rear wheels 12 in engagement with teeth 22 of rack 21.

Pawls 24, 24 are mounted for oscillation on pins 26 on rear wheels 12 to engage with pinion 23 when it revolves in a direction which will turn wheels 12 to propel the skate forward, but these pawls will pass over the pinion teeth under the resilient pressure of springs 25 thereon when said pinion revolves in the opposite direction.

The engagement between rack 21 and pinion 23 is such that when said rack moves downward pinion 23 engages pawls 24 and revolves wheels 12 in a direction to propel the skate forward, while when said rack moves upward pinion 23 revolves in the opposite direction and said pawls pass over the teeth thereof without engaging therewith and wheels 12 are not affected by the upward movements of rack 21 but may continue to revolve in a direction for forward propulsion when said rack is moving upward. Hence, wheels 12 not only serve as vehicle wheels for the skate but are driving wheels thereof.

My improved mechanism is shown herewith as applied to a well-known make of roller skates which are made for fastening to the feet of the user with straps, not shown, in the usual way. When thus fastened and the foot is elevated above the ground to either cause the rear wheels only to be free of the ground with the front wheels in contact therewith or both front and rear wheels above the ground, said rear end of the skate may attain a position shown in dotted lines in Fig. 3 where base 9 is at 9′, plate 15 is at 15′, slides 16 are at 16′ and rack 20, 21 is at 20′, 21′.

Now if the downward movement of the foot causes wheels 12 to contact with the ground and then continues till the rear end of

the skate is in its full-line position, rack teeth 22 have caused the revolution of pinion 23 which, through pawls 24, has driven wheels 12 thus causing the forward propulsion of the skate by said downward foot movement. When the foot is raised and rack teeth 22 cause the pinion to revolve in the opposite direction, for reasons explained above, drive wheels 12 are not revolved by said pinion movement.

The alternate repetition of these movements of both feet of a skater, equipped with my skates, will cause a nearly continuous forward propelling revolution of the driving wheels of the skates and the skater will be driven forward by power which is not available when ordinary roller skates are used.

The power used in propelling the driving wheels of my skates, conveyed by the mechanism above described, comes from the downward movements of the body of the skater and these movements differ little from those required when using ordinary roller skates thus the propelling effort made available by my mechanism is secured with little additional effort on the part of the skater.

The foot work of the skater briefly referred to above is that of the usual roller skater, but propulsion can be had by using my skates with another kind of foot movements quite ineffective to propel the skater when wearing the ordinary roller skates. By alternately raising the heel of each foot while the weight of the body is born on the ball of the foot the rear or heel end of plate 9 will be carried upward lifting rack 21 to its upper position at 21′ in Fig. 3, assuming in this case that wheels 12 remain on the ground, and when the foot again returns to its horizontal position with the weight of the heel thereof born by the ground through the skate structure wheels 12 have been driven forward by the return downward of the rack and said alternate raising and lowering of the heels will act to almost continuously propel the skates forward.

Having thus disclosed my invention, what I claim as new therein and desire to secure by Letters Patent is,—

In roller skates, a skate frame, a front axle fastened to said skate frame, a pair of wheels mounted for revolution on said front axle, a rear axle, guides fastened to said rear axle, slides fastened to said skate frame engaged with said guides for limited reciprocation therein, a gear and ratchet pinion mounted loose for revolution on said rear axle, two rear wheels mounted loose for revolution on said rear axle on opposite sides of said pinion, spring-pressed pawls pivoted on each of said rear wheels to engage with said pinion only when said pinion revolves to drive said rear wheels forward through said pawls, and a rack fastened to said skate frame for continuous engagement with said pinion during said oscillations of said rear axle adapted to revolve said pinion to engage said pawls and drive said rear wheels forward when said rack moves downward on said pinion.

WILLIAM V. VAN ETTEN.