April 15, 1930. H. C. RAYNES 1,754,370

APPARATUS FOR PRODUCING FIBER BOARD

Filed Oct. 29, 1927 2 Sheets-Sheet 1

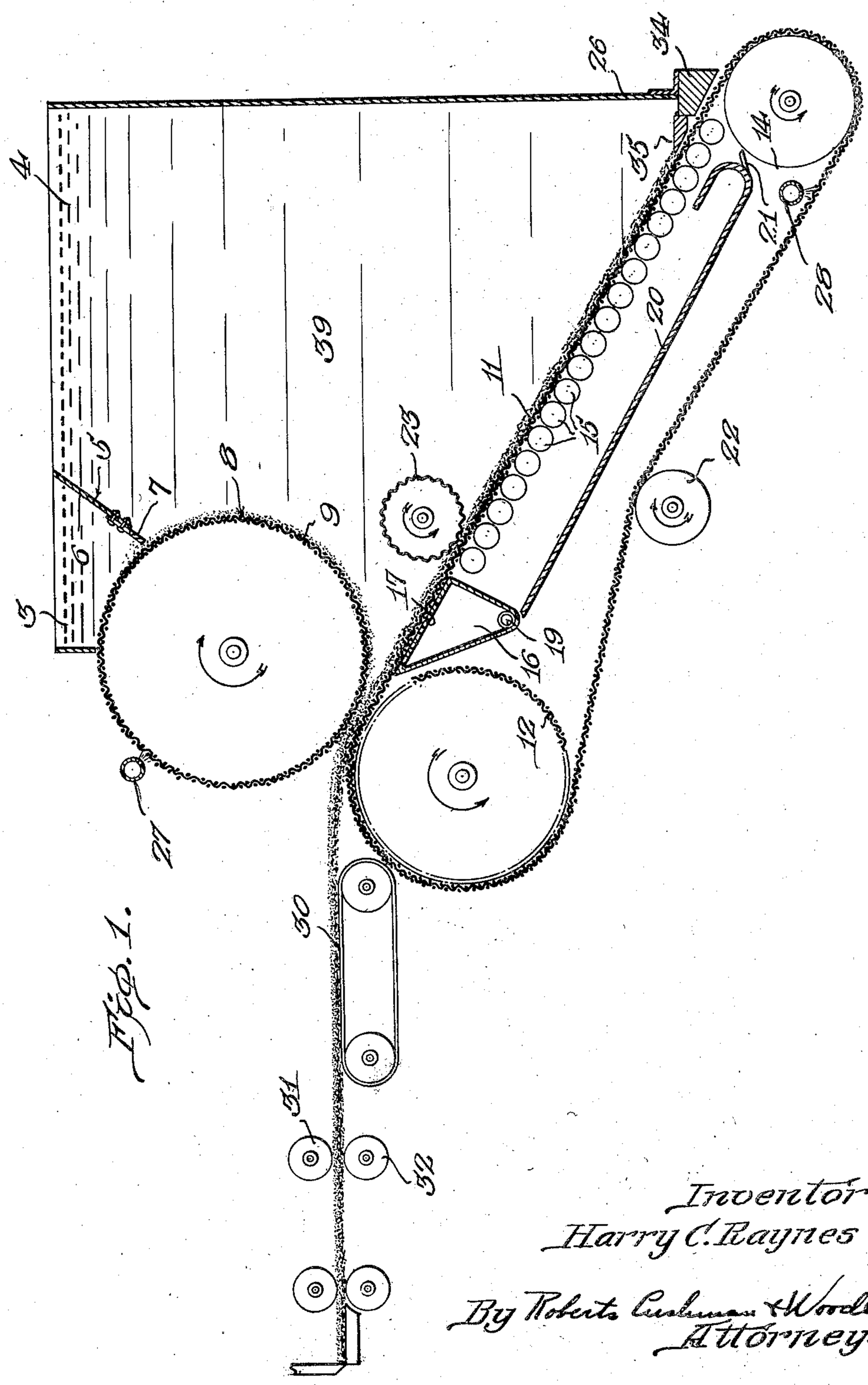

Fig. 1.

Inventor
Harry C. Raynes

By Roberts Cushman & Woodbury
Attorneys

April 15, 1930. H. C. RAYNES 1,754,370

APPARATUS FOR PRODUCING FIBER BOARD

Filed Oct. 29, 1927 2 Sheets-Sheet 2

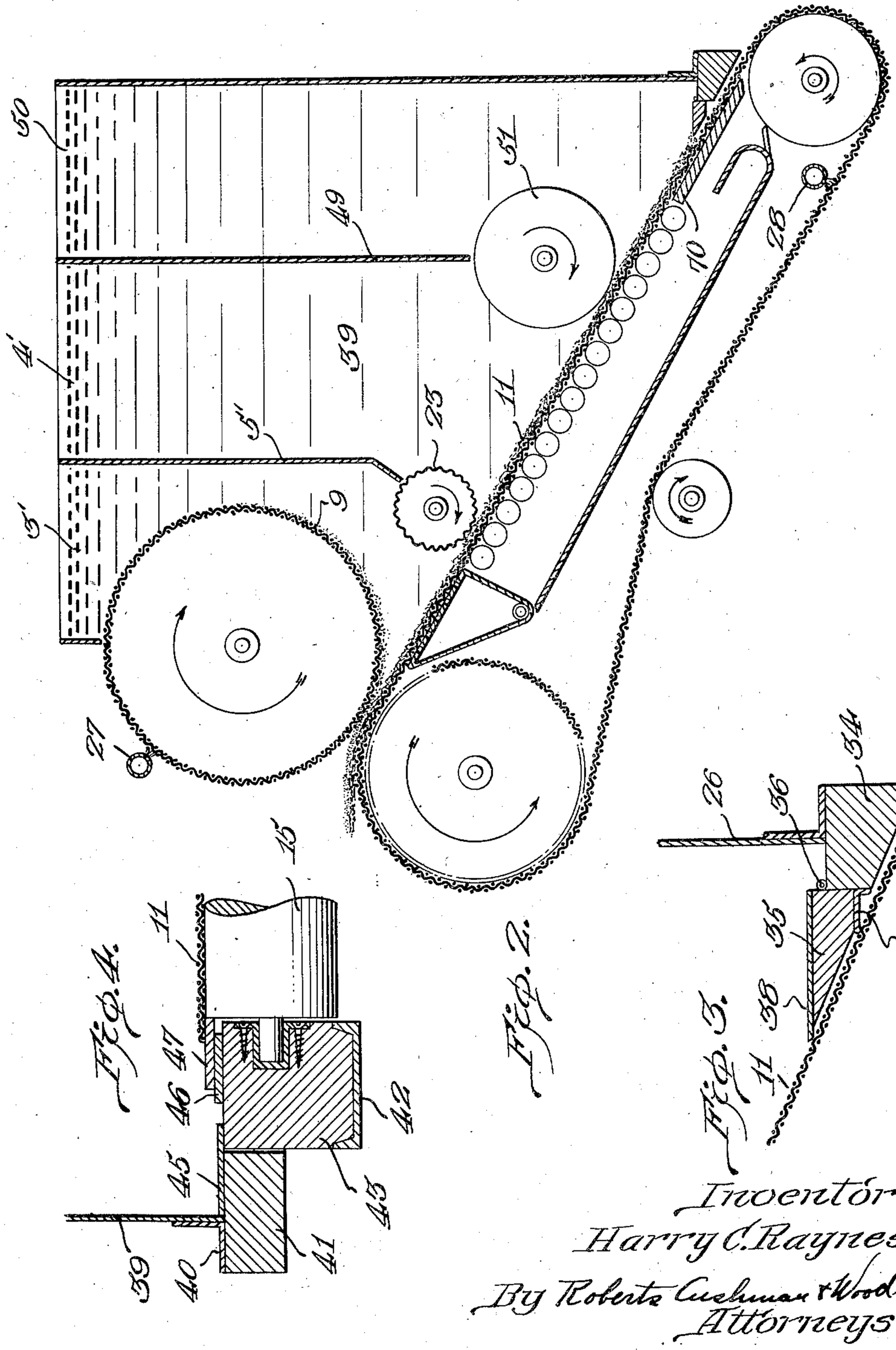

Fig. 2.

Fig. 4.

Fig. 5.

Inventor
Harry C. Raynes
By Roberts Cushman & Woodbery
Attorneys

Patented Apr. 15, 1930 1,754,370

UNITED STATES PATENT OFFICE

HARRY C. RAYNES, OF PORTSMOUTH, NEW HAMPSHIRE, ASSIGNOR, BY MESNE ASSIGNMENTS, TO BEMIS INDUSTRIES, INCORPORATED, OF BOSTON, MASSACHUSETTS, A CORPORATION OF DELAWARE

APPARATUS FOR PRODUCING FIBER BOARD

Application filed October 29, 1927. Serial No. 229,621.

This invention relates to a method and apparatus for manufacturing wall board or fiber board, particularly board of the type disclosed in my copending application, Serial No. 134,663, filed September 10, 1926.

This board is provided with different characteristics upon and adjoining its opposite faces; one side thereof is formed of fine fiber and is rather smoothly calendered to permit the direct application of paint or varnish, while the opposite side is formed of coarse fibers and is preferably roughened to receive plaster or the like without requiring the use of lathing.

This process permits the rapid and continuous formation of a substantially integral wall board of the character described, in which the coarse fiber layer gradually merges into the layer of fine fibers so that the completed board comprises a substantially unitary whole which is free from any tendency to split. The coarse fibers are deposited upon the layer of fine fibers while the pulp is still in a soft, semi-fluid state, the primary sheet of plastic material being expressed and the fibrous layers simultaneously pressed together to unite them into a substantially integral sheet.

The apparatus disclosed herein is compact and adapted to continuously manufacture this type of wall board in the form of satisfactory, uniform product in which fibers of different characteristics are united. To this end, the type of machine disclosed by the present invention is provided with a novel arrangement of component elements including foraminous members, which are designed to receive fibers of different character and to carry them to the outlet of the pulp vat, whence they are extruded as an integral plastic sheet. The pulp vat itself comprises compartments for coarse and fine fibers which are concomitantly received on the foraminous members, each of these members forming a wall portion of one of the compartments below the fluid level therein, while, in one form of the invention, one member may form a part of the wall of both compartments, so that it receives intermingled layers of coarse and fine fiber, thereby insuring the close union of the fibers in the ultimate fiber board. This type of machine is very compact and is arranged to make use of a comparatively high hydrostatic head, so that the fibers are deposited at a relatively rapid rate, whereby rapid continuous emission of the plastic sheet may result.

The above and further objects and advantageous features of the invention will be apparent to those skilled in the art upon a reading of the subjoined description and claims in conjunction with the accompanying drawings, in which—

Fig. 1 is a diagrammatic vertical sectional view of one form of my apparatus;

Fig. 2 is a view similar to Fig. 1 showing a modified form of the apparatus;

Fig. 3 is a detail view in vertical section showing the means for sealing the lower end of the vat; and

Fig. 4 is a view in vertical section showing the means for sealing the sides of the vat.

The wall board or fiber board that is produced by the machine exemplified in the accompanying drawing may be made from a great variety of raw materials such, for example, as screenings, vegetable fibres, straw trimmings or waste from saw mills, waste from cotton mills, waste from either rag or wood fiber mills, municipal waste such as cotton, paper, wood or other fibers, unmerchantable stumpage or waste from lumbering operations, such as slashings and any other fibers of this general nature. These various fibers are fed preferably by a handling and sorting conveyor into a reducing mill in which the material may be initially divided. The fiber may then pass to a shredder or refining mill in which the material may be more finely divided.

The various forms of fiber as thus prepared may then be conducted to a precipitation system where they may be separated according to their various specific gravities, the differentiation being aided, if desired, by a chemical treatment of the fiber while in the mixing conveyor. For example, the heavy material may be divided out from the wood fibers, and the soft and hard wood fibers may be separated. The former are

preferably directly subjected to chemical treatment, while the latter pass into steaming kiers where they may also be impregnated by suitable chemical compositions. The hard and soft wood fibers may then be combined together with the proper proportion of waste paper or rag pulp, and may be then subjected to a final chemical treatment to aid fire and moisture resistance. It is to be understood, however, that any suitable pulp and method of preparation may be employed in my apparatus.

When using two compartments in the vat I prefer to use a base of stock which is mostly screenings from the pulp mill with some waste paper and for a surface or coating stock a mixture of ground wood with lesser amounts of ground wood screenings and waste paper, both stocks being mixed with a large proportion of water, the exact proportions being variable.

The pulp is supplied to the machine which more particularly forms one aspect of the subject matter of the present invention and is disclosed in the accompanying drawings. Referring to Fig. 1, the coating stock and basic stock are received in suitable head or mixing boxes, not shown, and fed therefrom into tanks or compartments 3 and 4, compartment 3 being used for the coating stock. These compartments may be separated by partitions generally indicated at 5 comprising a fixed member 6 and an adjustable member 7 which may be slid on the fixed member 6 to increase or diminish the distance between its edge and the cylinder mold or drum 8. A desirable clearance between the lower edge of member 7 and the drum 8 is about $\frac{3}{16}''$, but it should be understood that this distance may be varied at will in accordance with the characteristics of the stock and the type of board to be produced.

The coating stock is deposited upon the drum 8 which rotates in a clockwise direction is indicated by the arrow in Fig. 1. This cylinder mould is of ordinary construction and may comprise a non-corrosive screen 9 of brass, bronze, Monel metal or the like supported upon suitable ribs and is preferably of a coarser mesh than is customary in paper manufacture due to the character of the fibers. In the form of the invention shown in Fig. 1, the cylinder mold 8 on entering the vat first passes through the coating stock compartment 3 then through the compartment 4 and thus adds some of the rough or basic stock to the coating stock so that when it reaches the outlet of the vat, the layer on the drum 8 is partly finished stock and partly coating stock.

The rest of the stock is picked up on a lower carriage which comprises an endless belt or screen 11 preferably of the same mesh as the screen 9, the screen 11 being driven by means of a roll 12 which rotates in a counterclockwise direction as seen in Fig. 1. The roll 12 is preferably made in some hollow or porous form so that excess water from the pulp may pass therethrough when the board is passing between the drum 8 and the roll 12; for example, the roll 12 may be a cylinder mould. The lower run of screen 11 may pass over an idler roll 22 which is preferably adjustable vertically to vary the tension of the belt 11 and adjustable laterally to keep the same centered. The lower portion of screen 11 passes about a roll 14 which may be solid, skeleton or similar to the roll 12. A series of closely spaced table rolls 15 may support the upper course of the screen 11.

As shown in Fig. 1, the vacuum or suction box 16 is located near roll 12 and has a perforated top plate 17 to permit water to pass through from the stock adjacent to the outlet of the vat, the sole outlet from the box being a suction pipe 19 opening into the box adjacent to its bottom.

It has been found that during the operation of the apparatus, some fine stock passes through the screen 11 together with the water, thus tending to foul the apparatus. I therefore provide a catch screen or drain tray 20 running substantially the full width of the machine, this drain tray being preferably bent over at its lower end to form a gutter to receive the wet material which may run off as waste at either side of the tray. On the end of the tray 20 is a doctor 21 which may be of wood or other suitable material and which is positioned so that its end lies closely adjacent to the roll 14 for removing any material that may be deposited on the roll.

It has been found that the pulp is likely to be irregularly deposited upon screen 11, and to remove these irregularities, I preferably provide an additional roller 23 in the tank 4 adjacent to the screen 11 and opposite one or more of the table rolls. This roller is preferably corrugated in order to engage the plastic mass and to form an even surface on the same. The roll may be adjustably mounted and is driven in a counterclockwise direction, as seen in Fig. 1, so that the surface adjacent to the screen 11 is traveling in a direction opposite to that of the screen. Rolls 8, 12 and 23 may be driven from any suitable source of power, not shown.

The two layers of fiber deposited on the separate screens 11 and 9 meet adjacent the outlet of the apparatus and pass out between the rolls 8 and 12, being there compressed. The distance between the two screens at the narrowest point is preferably adjustable and for certain purposes $\frac{3}{8}''$ to $\frac{1}{2}''$ has been found to be a satisfactory clearance. The board passing from the outlet between rolls 8 and 12 is supported on a bridge or conveyor 30 and is carried to squeeze rolls 31, 32 where the greater part of the remaining water is squeezed out. A succeeding pair of rolls may

include the upper roll 31 which is preferably smooth and the lower roll 32 which is knurled to roughen the lower surface of the board. Thus one surface may itself form an attractive finish or may receive paint directly and the lower surface may be used to support plaster without the use of lathing. From the squeeze rolls the board may be passed through any suitable cutting means, such as is disclosed in my copending application above referred to.

If desired the entire lower carriage, including the screen 11, roll 12, table rolls and drain trays may be rotatable about the axis of the roll 14 so as to permit the apparatus to be cleaned out and also to permit a variation of the clearance between screens 9 and 11 at the outlet of the tank.

Referring to Fig. 3, I show means for preventing leakage at the lower end of the tank. To the end plate 26 of the tank is secured a block or beam 34 preferably of some water-resistant wood, such as cypress, to which is hinged at 36 a second block or beam 35 whose lower edge is beveled to correspond with the inclination of the screen 11. Below the block 35 is a section of flexible fibrous material 37, such as felt, which is affixed to the block 34 and is adapted to bear on the screen 11, and above the block 35 is a strip of fibrous material 38, such as canvas, which is adapted to touch the screen 11, this combination serving effectually to seal the joint. The hinge 36 permits the raising of the block 35 to completely clear the screen.

In Fig. 4 I show a means for sealing the sides of the tank adjacent to the wire or screen 11, such means comprising a block or beam 41, preferably of cypress, fixed to the sides 39 of the tank by angle members 40. The table rolls 15 are preferably supported in a block or beam 43, preferably of strong wood, such as oak which is in turn supported by a metal channel member 42, a slight clearance being left between the blocks 43 and 41. The narrow joint between blocks 41 and 43 is sealed by a strip of flexible material 45, such as canvas. Affixed to the block 43 is a metal plate 46 which may support a second metallic strip or plate 47 on which the screen 11 slides adjacent the ends of the table roll 15.

In some cases it may be desirable to provide a thicker surface coat than is possible in the form of the device shown in Fig. 1, and for this purpose I may use a device such as shown in Fig. 2 in which the partition 5′ extends substantially vertically from the screen 11 instead of abutting the screen 9, the adjustable member 7 being dispensed with, and in place thereof the partition 5′ may terminate closely adjacent to the roll 23 which serves as a valve in the event that the heads of the stock in the compartments 3′ and 4′ are different.

In some cases it may be desirable to coat both sides of the board, and for this purpose I may use a second partition 49 (Fig. 2) providing a third compartment 50 which may be used for the lower coating stock by permitting deposition of a layer of the same upon the screen 11 prior to the deposition of the stock from the tank 4′. I have here shown a roll 51′ at the lower end of the partition 49 which is rotatable in the direction indicated to serve as a valve between compartments 4′ and 50 as above described with reference to roll 23′, but it is to be understood that any suitable form of valve or seal, adjustable or otherwise may be used if desired. These rolls are rotated in a direction to conform to the direction of movement of the pulp layer and preferably serve lightly to smooth the same. While I have shown both the partitions 5′ and 49 in Fig. 2 for convenience of illustration, it is obvious that each of these partitions may be used separately as well as together.

The plate 70 shown beneath a portion of screen 11 in Fig. 2 serves to check the flow of liquid when the first portion of the pulp layer is being deposited, thus eliminating too rapid deposition and the forming of lumps.

For the purpose of cleaning the screens 9 and 11, I provide pipes 27 and 28 respectively which are perforated at intervals and may be used with either water or compressed air as desired in order to remove the material from the screen as shown at 28 or to blow it off by a series of jets as shown at 27.

Obviously any suitable openings, control valves and the like may be arranged to control the level of the liquid in the various compartments.

I claim:

1. A machine of the class described, comprising a pulp vat having an outlet, a pair of compartments in said vat adapted to hold pulp of different characteristics, a pair of movable foraminous surfaces, each having a portion adjoining one of said compartments and adapted to pick up fiber therefrom, the surfaces being arranged in converging relation at the outlet of the vat, one of said surfaces forming the bottom of the vat.

2. A machine of the class described, comprising a pulp vat having an outlet, a pair of compartments in said vat adapted to hold pulp of different characteristics, and a pair of movable foraminous surfaces each having a portion adjoining one of said compartments and adapted to pick up fiber therefrom, the surfaces being arranged in converging relation at the outlet of the vat, and one of said surfaces forming the bottom of the vat and being inclined upwardly toward said outlet.

3. A machine of the class described comprising a pulp vat having an outlet, a partition dividing the vat into compartments, an endless foraminous member forming at least a portion of the bottom of one compartment and being movable toward said outlet, and

a second endless foraminous surface movable toward said outlet and having its face adjoining said outlet in converging relation to the other foraminous surface, said second surface having a portion passing in contact with the material in the second vat compartment.

4. A machine of the class described comprising a pulp vat having an outlet, a partion dividing the vat into two compartments, an endless foraminous member forming at least a portion of the bottom of one compartment and being movable toward said outlet, and a second endless foraminous surface movable toward said outlet and having its face adjoining said outlet in converging relation to the other foraminous surface, each portion of said second surface passing in contact with material in the second compartment and subsequently passing in contact with the material in the first compartment.

5. A machine of the class described comprising a pulp vat having an outlet, a partition dividing the vat into two compartments, an endless foraminous member forming at least a portion of the bottom of one compartment and being movable toward said outlet, and a second endless foraminous surface movable toward said outlet and having its face adjoining said outlet in converging relation to the other foraminous surface, each portion of said second surface passing in contact with material in said second compartment while defining one side of said compartment.

6. A machine of the class described comprising a pulp vat having an outlet, a partition dividing the vat into two compartments, an endless foraminous member forming at least a portion of the bottom of one compartment and being movable toward said outlet, and a second endless foraminous surface movable toward said outlet and having its face in converging relation to the other foraminous surface adjoining said outlet, said second surface having a portion passing in contact with the material in the second compartment, and defining one side of each of said compartments.

7. A machine of the class described comprising a pulp vat having an outlet, a partition dividing the vat into two compartments, an endless inclined foraminous belt forming at least a portion of the bottom of one compartment and being upwardly movable toward said outlet, and a meshed wire drum having its surface movable toward said outlet and having its face in converging relation to the foraminous belt adjoining said outlet, said drum having a portion passing in contact with the material in the second compartment.

8. A machine of the class described comprising a pulp vat having an outlet, a partition dividing the vat into two compartments, an endless foraminous belt forming at least a portion of the bottom of one compartment and being movable toward said outlet, and a meshed wire drum having its surface movable toward said outlet and having its face adjoining said outlet in converging relation to the foraminous belt, said drum having a portion passing in contact with material in said second compartment, said belt being inclined upwardly toward the exit.

9. A machine of the class described comprising a pulp vat having an outlet, a partition dividing the vat into two compartments, an endless foraminous belt forming at least a portion of the bottom of one compartment and being movable toward said outlet, a meshed wire drum having its surface movable toward said outlet and having its face in converging relation to the other foraminous surface adjoining said outlet, said drum having a portion passing in contact with material in the second compartment, and a vacuum box under a portion of said belt adjoining said outlet.

10. A machine of the class described comprising a pulp vat having an outlet, a partition dividing the vat into two compartments for stock having different characteristics, an endless foraminous belt, skeleton rolls supporting one end of said belt and holding it in position to form an inclined bottom for the vat with its end adjacent to said outlet in the higher position, table rolls supporting said belt between the skeleton rolls, a drain tray beneath the table rolls for carrying away water and stock, which passes through said belt, and a hollow foraminous drum in converging relation to said belt at said outlet, said drum forming a part of the wall of each compartment below the normal level of the stock therein.

11. A machine of the class described comprising a pulp vat having an opening, a partition dividing the vat into two compartments, a pair of movable foraminous surfaces each having a portion adjoining one of said compartments and adapted to pick up fibers therefrom, and a roll adjacent to one of said surfaces and cooperating therewith to provide the fiber layer with an even surface.

12. A machine of the class described comprising a pulp vat having an outlet, a partition dividing the vat into two compartments for stock having different characteristics, an endless foraminous belt, skeleton rolls supporting the ends of said belt and holding it in position to form an inclined bottom for the vat with its end adjacent to said outlet in the higher position, table rolls supporting said belt between the skeleton rolls, an inclined drain tray between said skeleton rolls having its lower end turned up to form a gutter, a doctor bearing against the lower skeleton roll, a skeleton drum covered with wire mesh in defining said outlet, said partition being at a variable distance from said

skeleton drum, a ribbed roll adjacent to said belt opposite one of said table rolls and rotating in a direction opposite to the direction of motion of said belt for engaging the fiber layer thereon, and a vacuum box below the upper run of said belt adjacent to said outlet for removing some of the water from the pulp layer on said belt.

13. A machine of the character described comprising a vat, said vat having an imperforate side wall, a foraminous belt forming the bottom of the vat and inclining upwardly from said side wall, a movable foraminous surface in converging relation to the upper end of the inclined belt and cooperating with the same in forming an end portion of the vat, whereby a pulp layer may be deposited upon the foraminous belt and a second pulp layer be deposited upon the foraminous surface, said belt and surface moving into juxtaposition at the side of the vat so that the respective layers of pulp are brought into intimate contact with each other and pressed between the belt and foraminous surface.

Signed by me at Portsmouth, N. H., this 21st day of October 1927.

HARRY C. RAYNES.