April 15, 1930. C. A. LEONARD 1,754,327

PAPER BAG HOLDER

Filed March 19, 1929 2 Sheets-Sheet 1

Fig. 1.

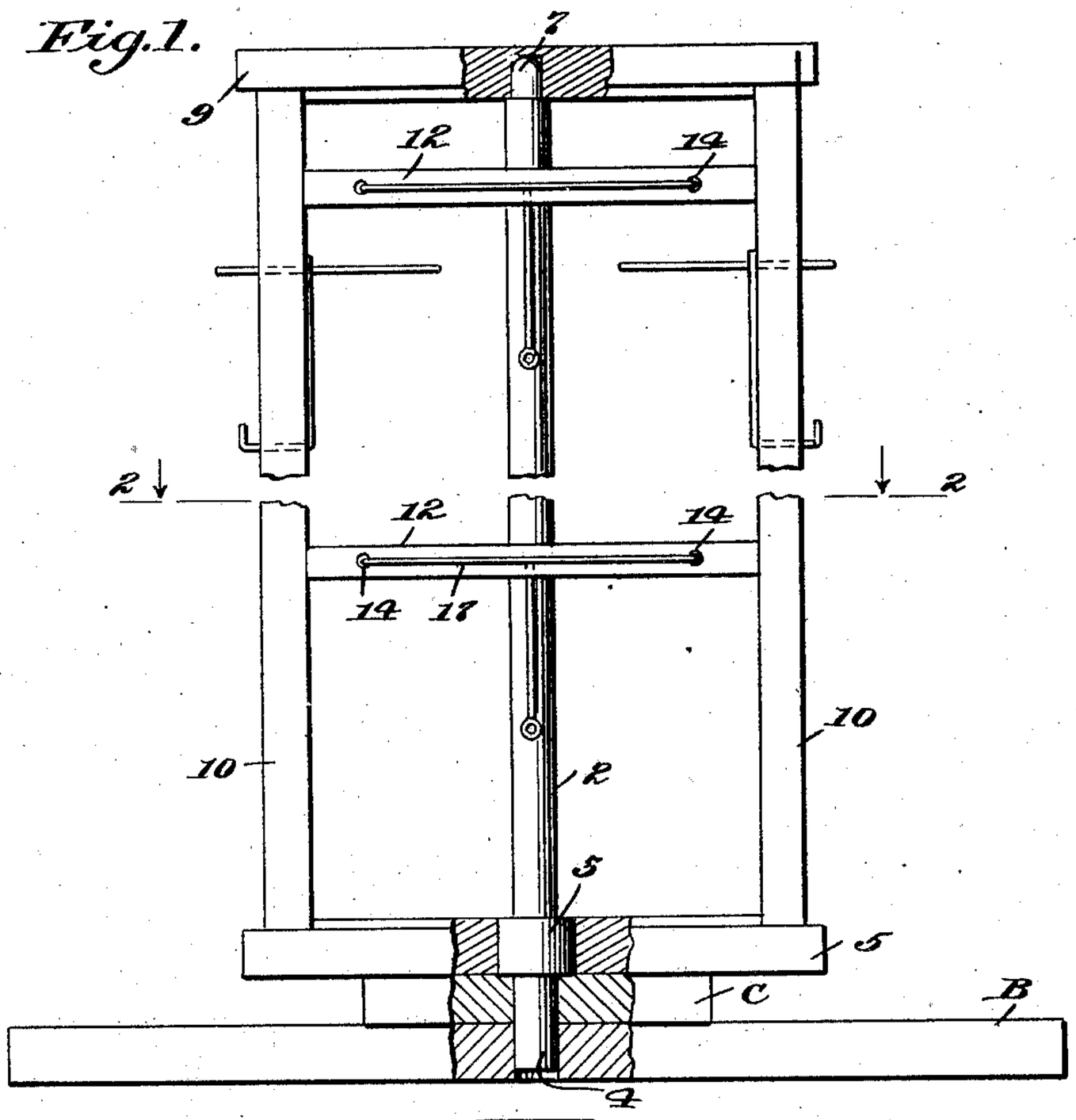

Fig. 2.

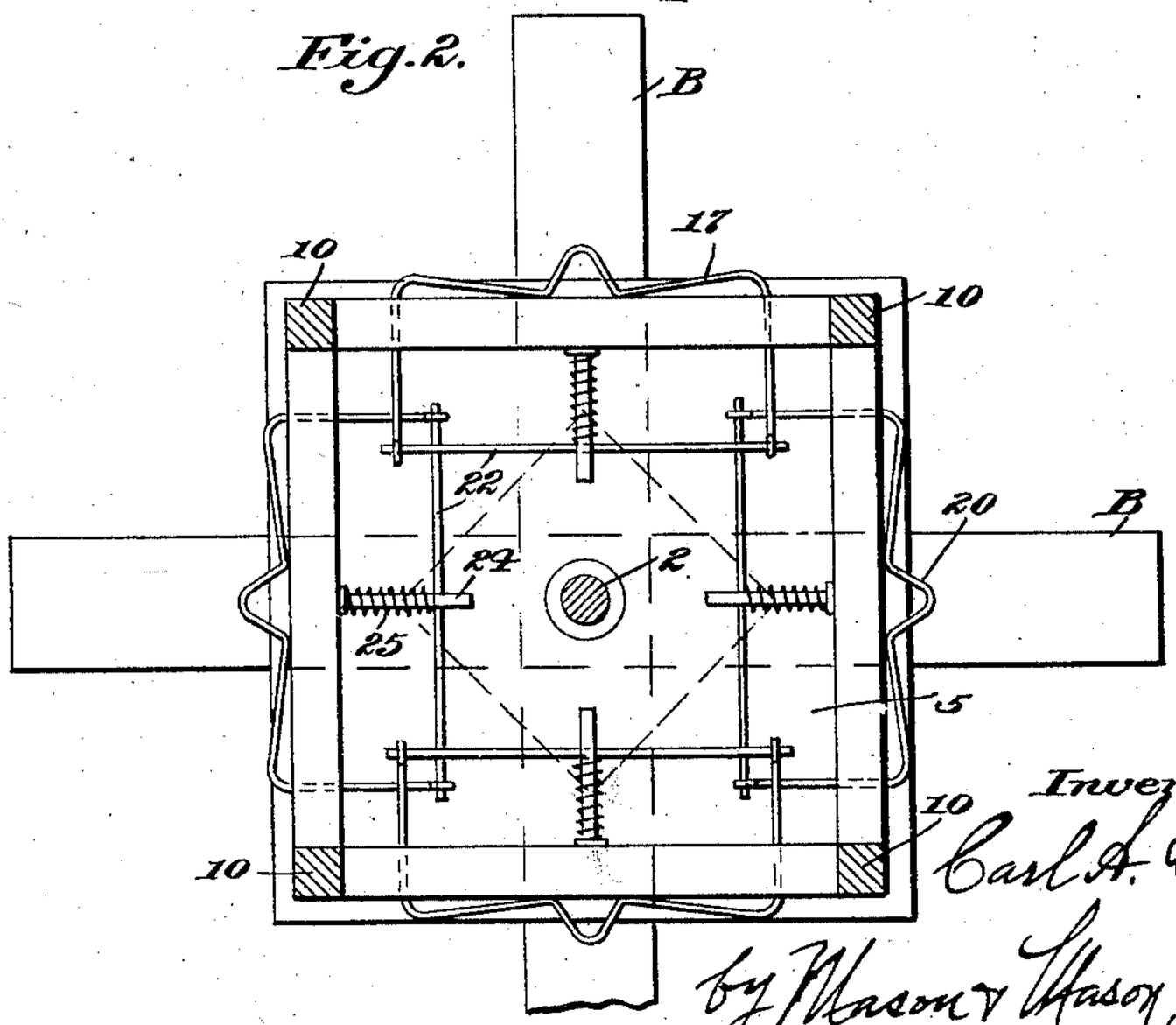

Inventor:
Carl A. Leonard,
by Mason & Mason, Att'ys.

April 15, 1930. C. A. LEONARD 1,754,327

PAPER BAG HOLDER

Filed March 19, 1929 2 Sheets-Sheet 2

Fig. 3.

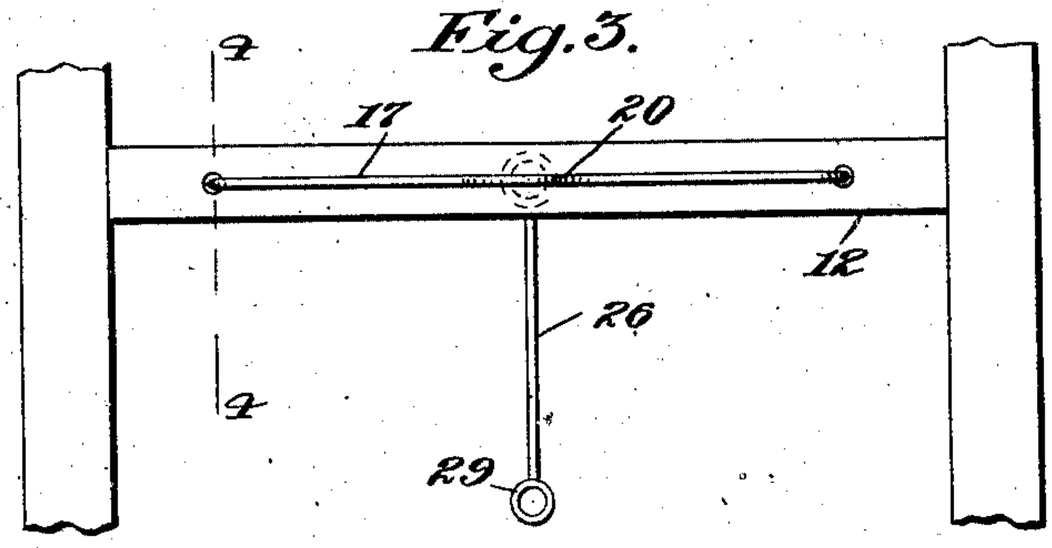

Fig. 4.

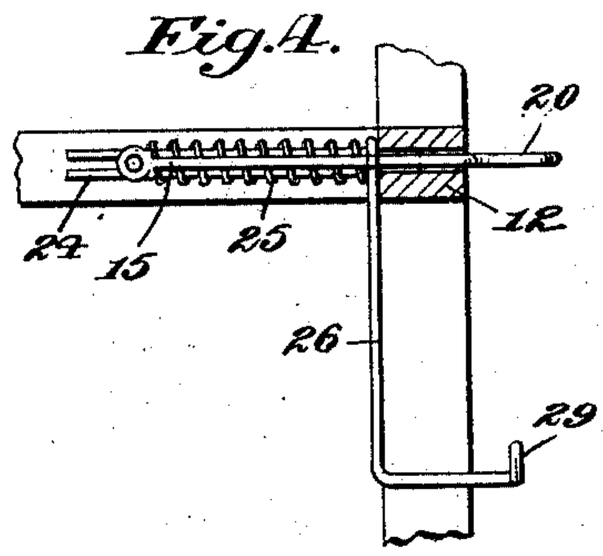

Fig. 5.

Fig. 6.

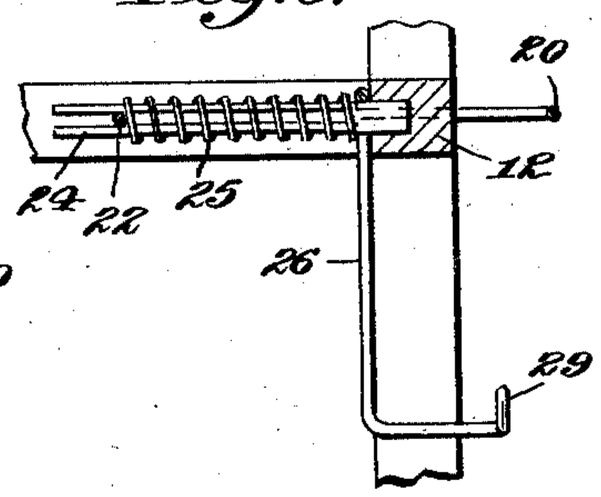

Fig. 7.

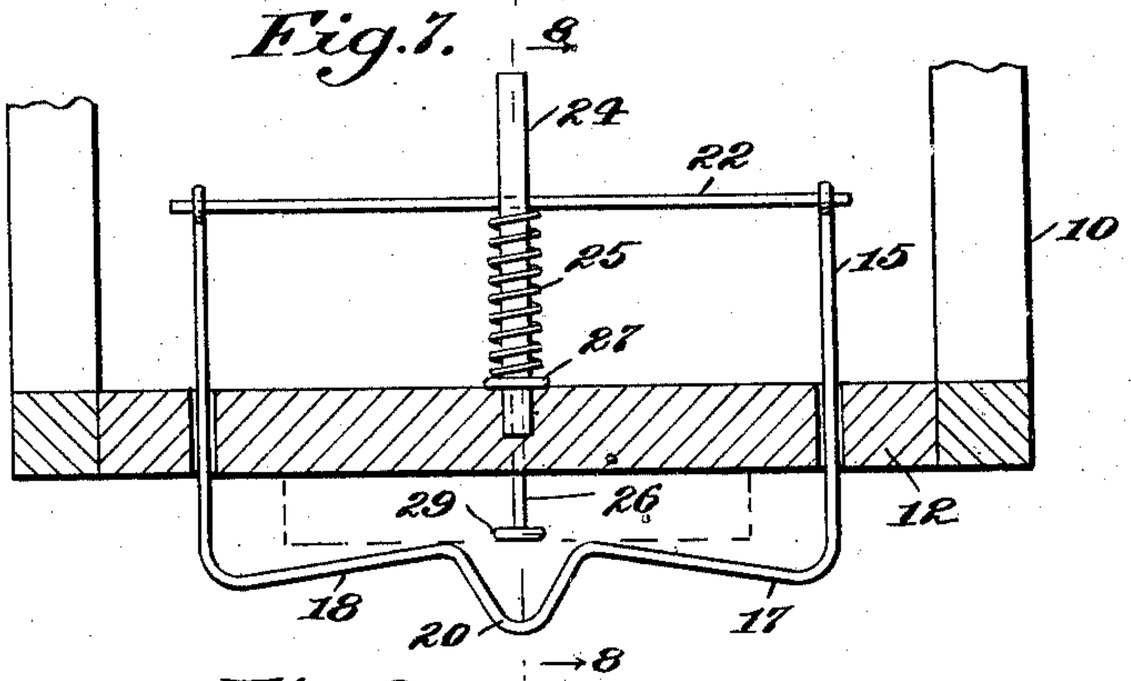

Fig. 8.

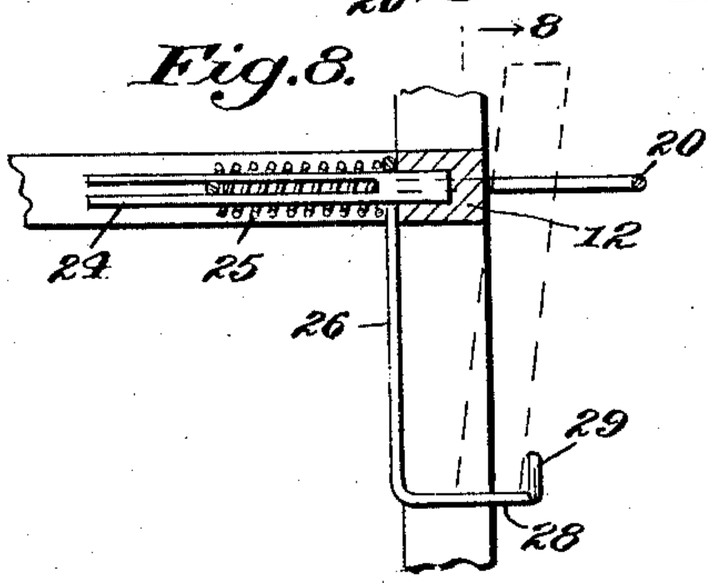

Inventor:
Earl A. Leonard,
by Mason & Mason,
Att'ys.

Patented Apr. 15, 1930 1,754,327

UNITED STATES PATENT OFFICE

CARL A. LEONARD, OF BRISTOL, TENNESSEE

PAPER-BAG HOLDER

Application filed March 19, 1929. Serial No. 348,292.

This invention relates to paper bag holders and supporting means therefor.

An object of the invention is to provide a rotatable or other form of supporting rack, together with one or more paper bag holders which are so applied to the rack as to be readily accessible and to support and hold the bags in position in such manner that they may be easily removed from the holders.

Other valuable and important objects and features of the invention will be apparent from the following description, when considered in connection with the accompanying drawings, in which:

Fig. 1 is a view in side elevation, partly broken away, of a rack equipped with paper bag holders;

Fig. 2 is a sectional plan view on the line 2—2 Fig. 1;

Fig. 3 is an enlarged detail view, showing a portion of the rack with a bag holder thereon;

Fig. 4 is a sectional detail on the line 4—4 Fig. 3;

Fig. 5 is a sectional plan view through the rack illustrating a single bag holder;

Fig. 6 is a sectional detail view on the line 6—6 Fig. 5;

Fig. 7 is a view similar to Fig. 5 showing the bag holder in position for supporting a package of paper bags; and

Fig. 8 is a sectional view on the line 8—8 Fig. 7.

The base B for the rack is herein shown as composed of two crossed timbers, surmounted by a spacing block C, which supports the lower rectangular portion 5 of the rack. A central supporting standard 2 provided with an enlarged portion 3, has its lower end 4 seated in central apertures in the base B and the block C. The standard 2 is preferably provided at its upper end with a rounded portion 7 which is seated in a socket located centrally of the top member 9 of the rack. Between the members 5 and 9 of the rack, vertical corner posts or standards 10 are located, said posts being rigidly connected with the top and bottom pieces, 9, 5, to form a rack of rectangular form.

Extending between the corner posts 10 at suitable levels as desired are cross pieces 12 which are rigidly connected with the corner posts and extend horizontally therebetween. These cross pieces are provided with parallel perforations 14 through which freely pass the arms 15 of the bag holders 17. These bag holders are of U-form, and each has in addition to the side members 15, clamping bars 18 which extend in front of and bear against the cross pieces 12. The bars 18 each are bent inwardly at the points 18ª to engage the faces of the cross pieces 12 and are then bent outwardly to form loops 20, which may be grasped by the hand of the operator in order to pull the bag holders out for the purpose of receiving packages of bags.

The arms 15 of each bag holder are provided at their inner ends with eyes 21, or similar means to receive cross wires 22. Rigidly secured in sockets formed in the rear portions of cross pieces 12 are guides or forks 24 between the limbs of which freely slide the cross wires 22, and a spiral spring 25 surrounds each guide member 24, and is confined between the cross pieces 12 and the wires 22. With the construction as described it will be seen that the bag holders will be steadied and truly guided against twisting movements by the perforations 14 and the forked member 24, and furthermore that the spring 25 being under tension, the bag holder 17 will be normally held by a yielding force in the position shown in Fig. 5, where the front member 18 is maintained in engagement with the outer face of the cross piece 12.

Supports 26 for the bags are provided, the same being preferably made of wire, and having a loop 27 which surrounds the fork 24, close against the back face of the cross piece 12, thence extending downwardly, and thence outwardly at 28, and having at its lower terminal an eye 29 which is bent upwardly, and is spaced a suitable distance from the front face of the cross piece 12. The bag supports 26 (see Figs. 7 and 8) are adapted to be engaged by a package of bags as the same is inserted in position to be clamped by the bag holder 17, and the package is prevented from falling downwardly by its engagement with the horizontal member of the support 26.

As shown in Figs. 1 and 2, a plurality of bag holders comprising the several elements heretofore described are arranged upon the several cross pieces 12 of the rack, and bags of different sizes may be inserted in these several bag holders so that a salesman may, by rotating the rack upon its pivotal support 7, bring any one of the sides of the rack opposite to him and in convenient access to the desired package of bags. The device, accordingly, presents a convenient and readily accessible holding means for a plurality of different sized bags, and is easily operated to extract the bag or bags desired, in a minimum space of time.

It will be understood that when any one of the bag holders is pulled outwardly the spring 25 will be compressed and a space will be presented for the insertion between bar 12 and the bag holder 17 of a package of bags of desired thickness, and upon release of the bag holder the spring 25 will react and firmly clamp the package of bags against the front face of any one of the cross bars 12.

The right is reserved to make such changes in the relative arrangement of the parts described or in their specific construction as is contemplated by the spirit of the invention, provided such changes or alterations do not depart from the scope of the following claims.

I claim:

1. A bag holder comprising in combination a rack having a cross bar provided with spaced perforations, a bag holder of U-shape having a front bar which is bent inwardly to engage the face of said supporting member, and thence bent outwardly to form a loop-like handle, a cross bar connecting the inner terminals of said limbs, a forked guide rigidly secured to the back face of said supporting member embracing and guiding said bar, and a spiral spring confined between said supporting member and bar.

2. In a device of the class described, the combination of a horizontal supporting member provided with spaced perforations, a U-shaped bag holder having parallel limbs extending through said perforations, a cross bar connecting the inner ends of said limbs, a forked guide rigidly extending from the rear face of said supporting member and embracing said cross bar, a spring confined between said member and cross bar, and a bag supporter sustained from said guide and provided with a horizontal portion to engage a package of bags.

3. In a bag holder of the type described, the combination of a rectangular rack, a vertical standard for supporting said rack for rotation thereon, a plurality of horizontal supporting members carried by said rack, bag holders each comprising a U-shaped device having parallel limbs extending through perforations in said supporting members, bars connecting the inner terminals of said limbs, bifurcated guide members extending inwardly from said supporting members and embracing said cross bars, and spiral springs confined between said supporting members and cross bars.

In testimony whereof I have hereunto set my hand this 14th day of March A. D. 1929.

CARL A. LEONARD.