Oct. 15, 1929. G. E. HOWARD 1,731,663

METHOD AND APPARATUS FOR GRINDING AND POLISHING PLATE GLASS

Filed May 7, 1927 3 Sheets-Sheet 1

Fig. 1.

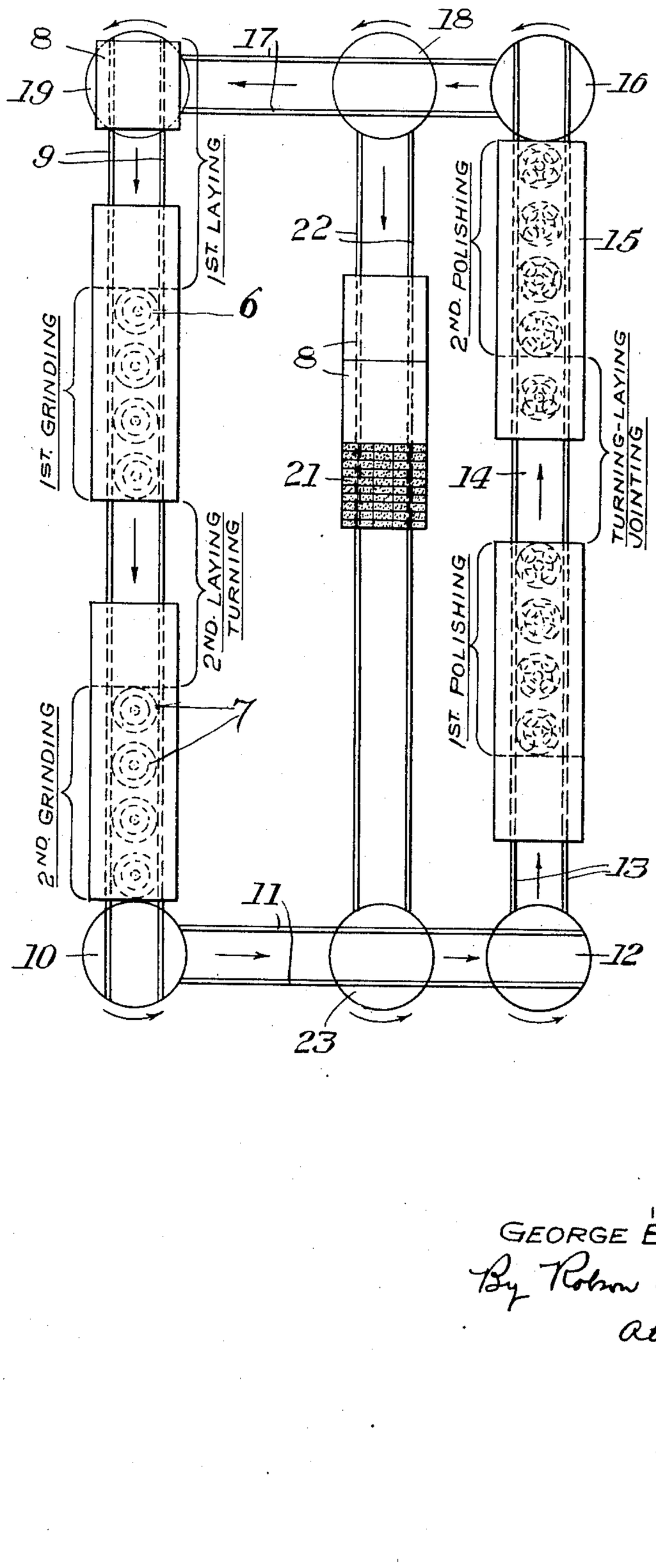

INVENTOR
GEORGE E. HOWARD
By Robson & Brown
Attorneys

Oct. 15, 1929. G. E. HOWARD 1,731,663

METHOD AND APPARATUS FOR GRINDING AND POLISHING PLATE GLASS

Filed May 7, 1927 3 Sheets-Sheet 2

Fig.2.

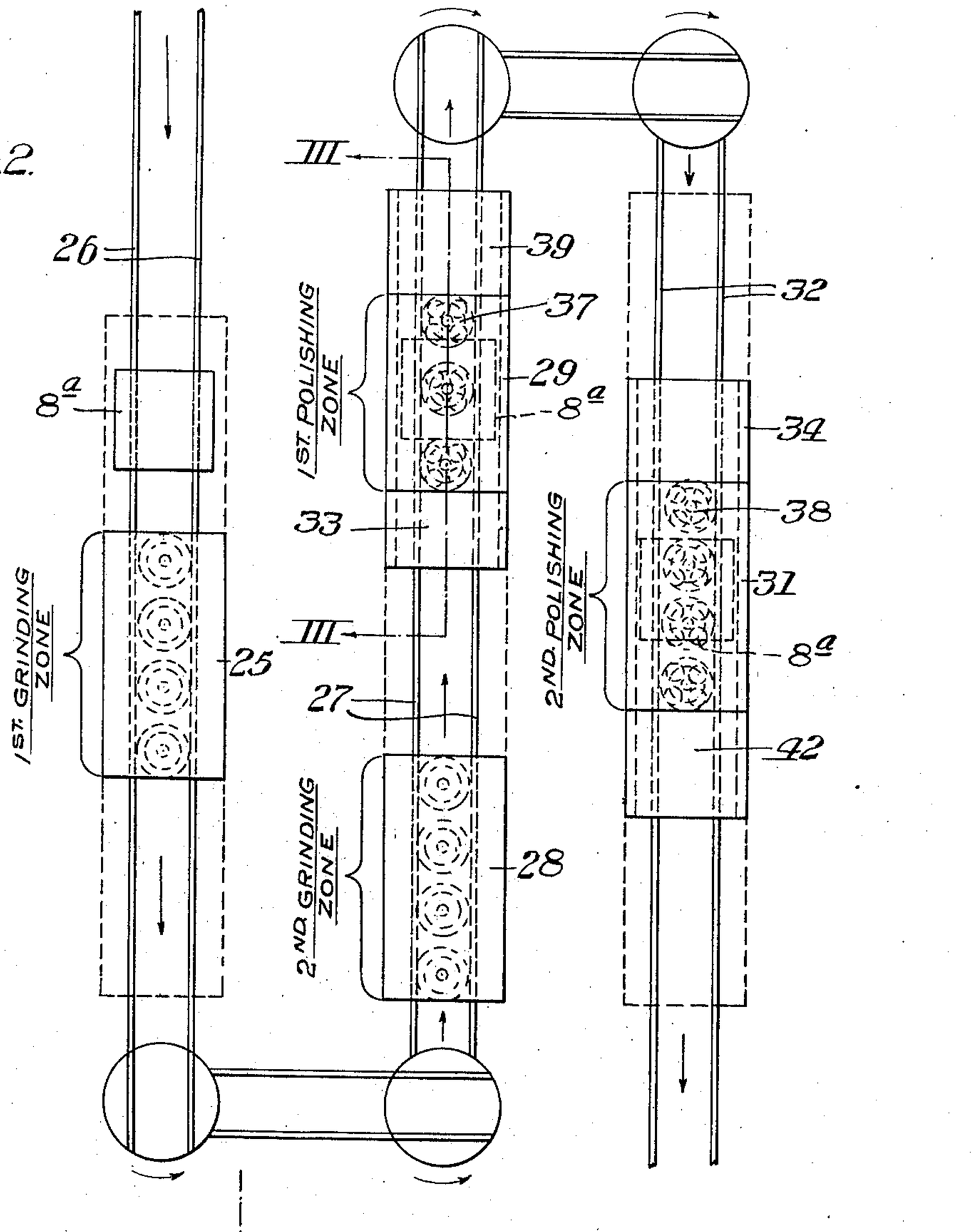

Fig.3.

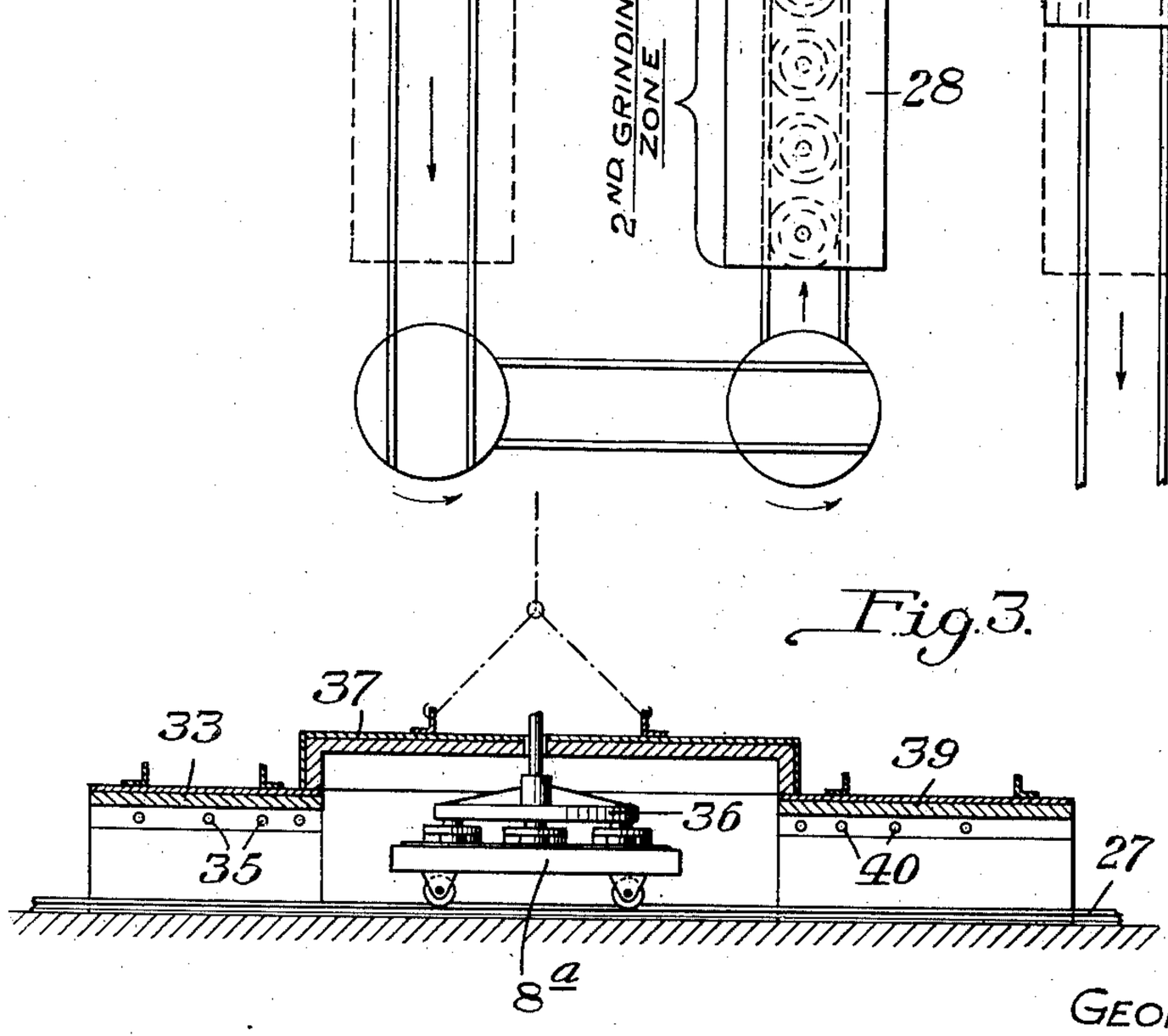

INVENTOR
GEORGE E. HOWARD
By Robson & Brown
Attorneys

Oct. 15, 1929. G. E. HOWARD 1,731,663

METHOD AND APPARATUS FOR GRINDING AND POLISHING PLATE GLASS

Filed May 7, 1927 3 Sheets-Sheet 3

Fig. 4.

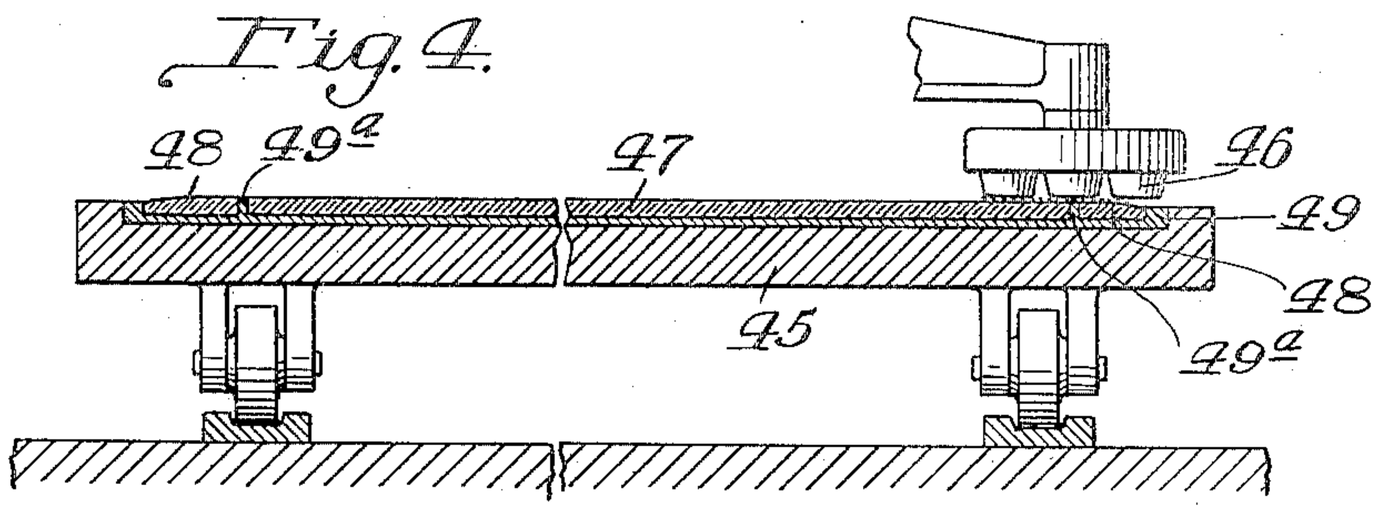

Fig. 5.

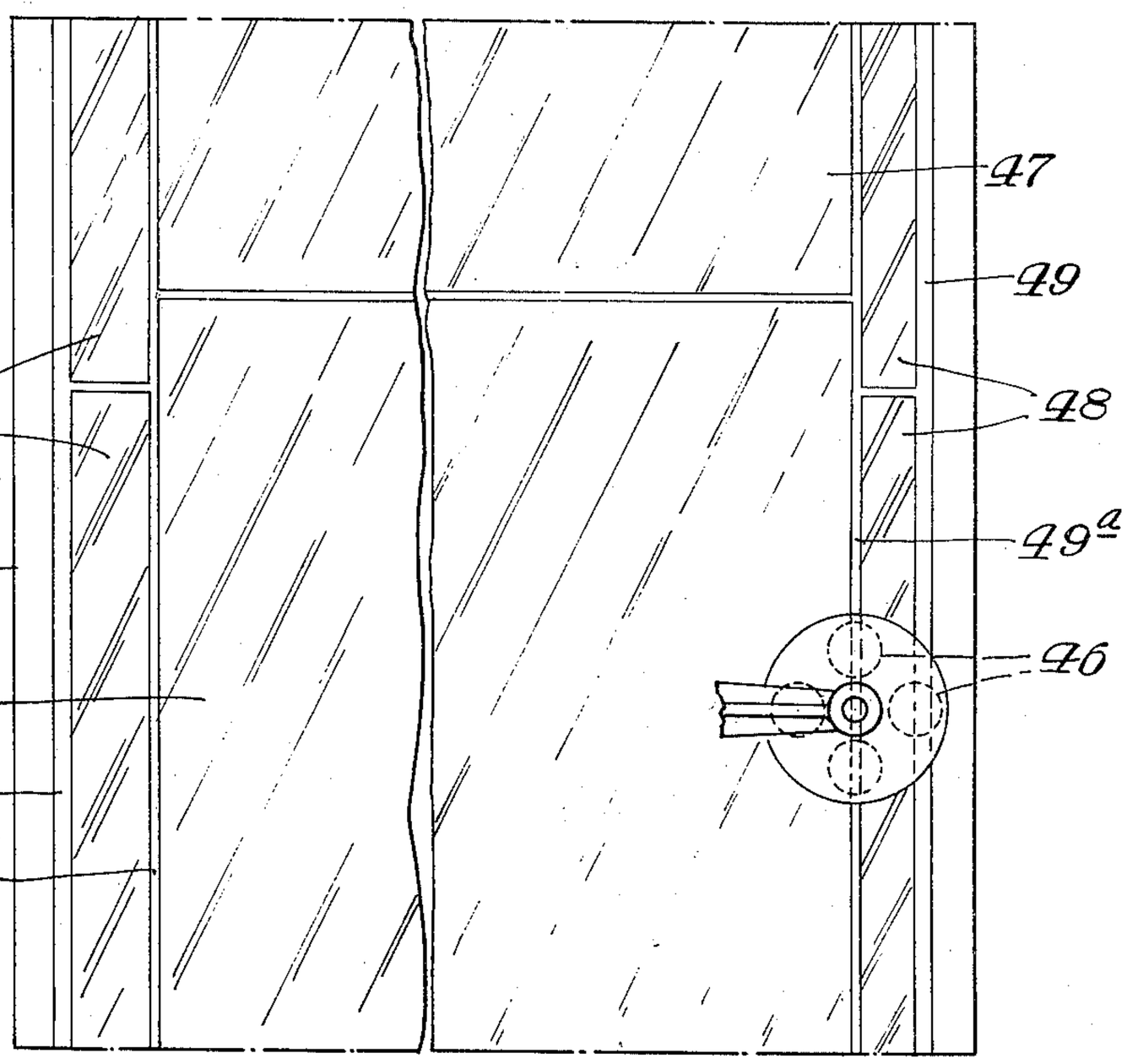

Fig. 6.

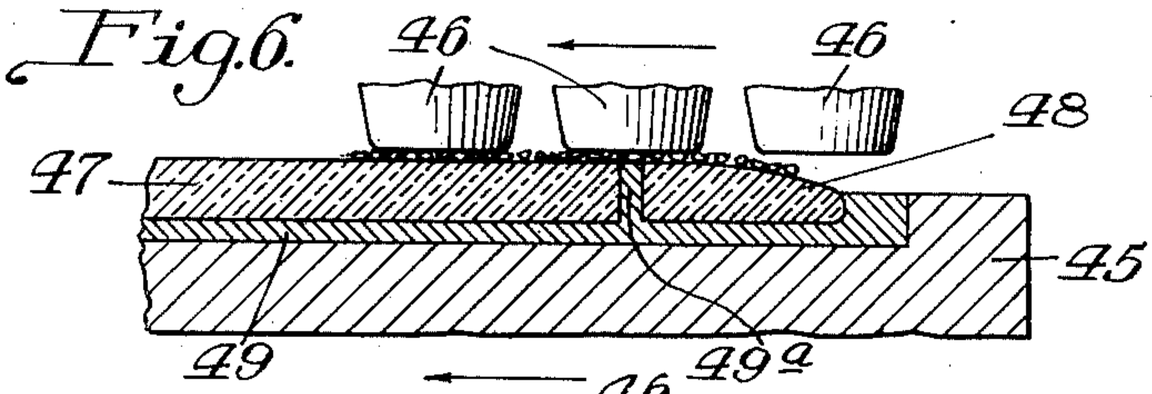

Fig. 7.

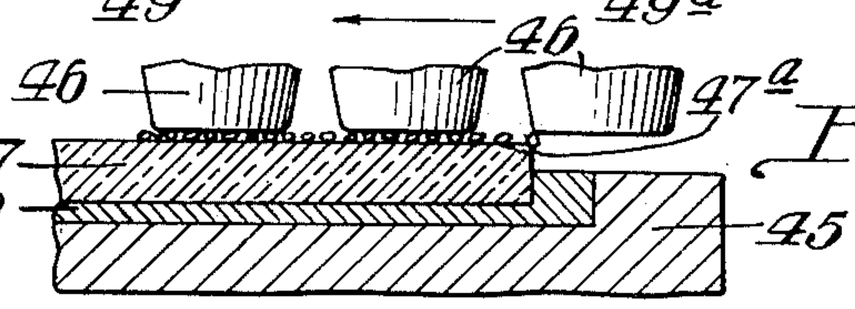

INVENTOR
GEORGE E. HOWARD
By Robert S. Brown
Attorney

Patented Oct. 15, 1929 1,731,663

UNITED STATES PATENT OFFICE

GEORGE E. HOWARD, OF BUTLER, PENNSYLVANIA, ASSIGNOR TO HARTFORD-EMPIRE COMPANY, OF HARTFORD, CONNECTICUT, A CORPORATION OF DELAWARE

METHOD AND APPARATUS FOR GRINDING AND POLISHING PLATE GLASS

Application filed May 7, 1927. Serial No. 189,566.

My invention relates to the grinding and polishing of plate glass and more particularly to a system of handling the plates of glass during grinding and polishing, and also includes means for protecting the sheets against breakage through sudden temperature changes or through impact of the runners at the edges thereof.

In the grinding and polishing of plate glass, both in the continuous or car system, and in the older systems where the glass has been trimmed on the edges as in the pot or casting system of making rough plate, a great amount of breakage occurs. This breakage is due to a number of causes. In the case of pot or casting glass, the plates are usually quite large and are sometimes warped when they come from the lehr. Variations in thickness are also present to a considerable degree, especially in the larger plates, and some differences in thickness occur also in a glass continuously rolled in the form of a ribbon, directly from a tank or forehearth. After one side of a plate of glass has been ground, that surface is levelled but there is still unevenness present in the opposite surface of the plate. If the plate is subjected to a polishing operation, upon the side first ground, before grinding the other side of the plate, difficulty is experienced in securing an even polishing heat, by reason of the variations in thickness of the plate. It is quite essential that the polishing heat as between different portions of the plate be as uniform as possible to avoid setting up strains in the body of the glass, and also to facilitate evenness of polishing action.

Instead of polishing that surface of the plate which is first ground, before grinding the other side, as is common practice, I first grind one side of the plate, then turn the plate and grind the other side, whereupon the plate is placed beneath a polishing head and the second-mentioned side is polished. Thereafter, the plate is again turned to the side which was first ground, and polished. The advantage of this consists in having the polishing operation performed upon glass having practically even thickness and therefore the strains set up by this process are largely eliminated and breakage thereby reduced. It adds an additional laying operation in the chain as opposed to the present cycle of operations, but the cost of this additional laying is more than overcome by the saving in the breakage of the glass.

Another feature of my invention resides in the provision of means for controlling the temperature of the glass during the polishing stages, to prevent breakage thereof and to produce a better product. In the polishing of plate glass, considerable heat is generated, and while the differences in temperature at various stages during the cycle of polishing which involves polishing one side of the sheet, turning the sheet and polishing the other side, are not so great as in the annealing process, yet as in the case of annealing, better results are secured if care is exercised to prevent rapid change in temperature of the sheet. To this end, I make provision for raising the temperature of the plates at the beginning of a polishing operation, for shielding the plates against cooling air currents during polishing, and for preventing rapid dissipation of the heat at the completion of a polishing operation.

Still another feature of my invention resides in the provision of means for avoiding rupturing of the plates of glass during grinding thereof, through impinging of the grinding runners against the edges of the plates. The edges of the plates are frequently chipped by the runners and cracks started which may gradually spread across the body of the sheet, during the grinding operation, or may spread later during the polishing of the sheet. Damage by the runners is particularly likely to occur in cases where grains of sand become caught between the edge or upper corner of the glass and the runners. To avoid such injury to the glass, I provide buffer strips at the edges of the table to protect the edges of the glass plate, these buffer strips being preferably strips of waste glass which may have been cut from the edges of a rough plate previous to grinding, as hereinafter described.

Various other advantages and objects of

my invention will appear upon reading the following description:—

One manner in which my invention may be practised is shown in the accompanying drawing, wherein Figure 1 is a diagrammatic plan view of a system of grinding and polishing; Fig. 2 is a diagrammatic plan view similar to Fig. 1, but exemplifying other features such as the control of temperature of the glass during the polishing operations; Fig. 3 is a view taken on the line III—III of Fig. 2; Fig. 4 is a cross sectional view of a wheeled table, showing means for protecting the edges of a glass plate from breakage by the grinding runners; Fig. 5 is a plan view of the apparatus of Fig. 4; Fig. 6 is a view of a portion of the apparatus of Fig. 4, but on an enlarged scale, and showing the manner in which the buffer strips protect the edges of the plates from the runners, and Fig. 7 is a view showing one manner in which the edges of the plates are damaged by the grinding runners when buffer strips are not employed.

Referring more particularly to Fig. 1, I show cars or traveling tables 8 that are first moved along the track 9, after the plates of glass have been placed thereon by imbedding in plaster, or supported in some other manner, at the first laying station. As cars are added to the train, they are advanced past the first grinding station where the upper surfaces of the plates are operated upon by grinders 6 in the usual manner. As each car reaches the second turning and laying station, the glass is turned and the table then advanced beneath grinders at the second grinding station. When each car reaches the end of the track 9, it is uncoupled from the following cars and turned by a turn table 10 of suitable form, to permit it to be advanced along tracks 11, as indicated by the arrows. A turn table 12 is provided for permitting transfer of the cars from the tracks 11 to tracks 13 upon which tracks the cars are advanced beneath polishing heads 7 at the first polishing station, to effect polishing of that surface of the glass which was ground at the second grinding station. After the first polishing operation, the glass is turned and laid at a station 14 to expose that surface which was ground at the first grinding station to the action of polishers at station 15. As each car enters the track 13, it will join the line of cars which will have passed to the track 13 in advance thereof.

When the cars have reached the end of the track 13, they are transferred by a turn table 16 to tracks 17 that lead across a turn table 18 to a turn table 19 where they may be again shunted to the tracks 9. At some point, preferably intermediate the turn tables 16 and 19, the glass is stripped from the cars and taken to stock, the cars thereupon being ready to receive glass, preparatory to another cycle of operations.

It will be understood that the polishing stations may be placed in line with the grinding stations, if desired, instead of being disposed to one side thereof, as shown in the drawing.

In order to facilitate cleaning of the polishing pads, I show what may be termed a cleaning car 21, that may suitably be shunted from track 17 by the turn table 18, to a track 22 and from the track 22 directed to the track 11 by a turn table 23. The cleaning car will be provided with suitable brushes, scrapers, or similar washing or other cleaning devices which will be engaged by the polishing pads as the car 21 passes along the track 13. By this arrangement, the pads may be softened and cleaned periodically without removing them and without seriously affecting the operation of the system.

After the polishing pads have been cleaned, it is necesasry that they operate upon glass for a considerable period of time before a new polishing face is formed thereon. The polishing car in its passage along track 13 is followed by cars containing glass upon which the pads will be resurfaced, but the glass on the cars which are the first to follow the cleaning cars will not be properly polished and must be again passed beneath the polishing heads. I, therefore, shunt such cars, by means of the turn table 18 to the track 22 and remove the cleaning car 21 from in front of the cars following it, by shifting it from the track 22 to the left on track 11, thus permitting the cars containing the partially polished glass to be again passed over the turn table 12 to the tracks 13, the cleaning car being returned to the track 22 until it is desired to again use the same.

In Figs. 2 and 3, I show a system similar to that shown in Fig. 1, but wherein a single grinding zone 25 is provided on track 26, and the second grinding operation and the first polishing operation are performed on the second track 27, at stations 28 and 29 respectively. A second polishing station 31 is provided above a track 32, the cars being transferred from one track to the other by means of turn tables and lateral tracks as in the system of Fig. 1. In connection with the system of Figs. 2 and 3, I disclose heat-controlling means which may also be applied to the system of Fig. 1, as well as to various other systems. At the entrance to polishing stations 29 and 31, I provide hoods 33 and 34 respectively that may contain burners or hot air inlets 35 to impart a preliminary heating to the glass, as the tables 8^a pass through the same, so that the temperature of such glass is not increased too rapidly by the polishing heads 36. Hoods 37 and 38 are provided over the polishing heads at the stations 29 and 31, that serve to assit in maintaining the glass at proper polishing temperatures and prevent chilling thereof by air currents. The hoods 37 and 38

are preferably removably mounted to permit access to or removal of the polishing heads 36.

As the tables 8ª. carry the glass from beneath the polishing head at station 29, they pass beneath a hood 39 that may simply serve to prevent too rapid radiation of heat from the glass, or heat may be supplied thereto through openings 40, or under some conditions it may be desired to supply cooling air through such openings, with the object of controlling the rate of cooling of the glass.

After the tables have passed from beneath the hood 39, they are transferred to the tracks 32 and the glass turned and relayed, whereupon the tables pass beneath the hood 34 where the glass is pre-heated, or at least the chill taken from the glass and the car, preliminary to encountering the polishers at station 31. At station 31, the hood 38, as in the case of the hood 37, protects the glass against currents of air which might tend to chill the same. When the glass is carried from beneath the hood 38, it passes beneath a hood 42 where it is permitted to cool gradually, preliminary to stripping of the same from the tables.

The temperature beneath the hoods 37 and 38 may be controlled by suitable means, as in case it is desired to increase the temperature at the beginning of the polishing operation, for instance, or to control radiation of heat toward the completion of the polishing operation.

In Figs. 4 to 7, I have shown one manner in which the glass may be placed upon tables or cars 45, the inventive idea hereinafter described being applicable to either traveling tables, or cars, or to those of the non-traveling type. The grinding runners are represented somewhat diagrammatically by the numeral 46. In order to grind the entire surface of the glass, it is necessary that the runners extend somewhat over the edges thereof. Since the runners are rotatably driven, there is a tendency for them to catch upon the edge of the glass and chip or crack the same, as indicated in Fig. 7, at 47ª. This chipping or cracking is probably largely due to the catching of grains of sand between the edges of the runners or grinding shoes and the edge of the glass sheet 47, as indicated in Fig. 7.

For this reason, I provide buffer strips 48 that are preferably composed of the glass which is ordinarily trimmed from the edges of a sheet previous to the grinding thereof and thrown away. These waste strips not only constitute an inexpensive source of supply, but are desirable in that they will wear down as the grinding of the sheet progresses, thus permitting the plate to be accurately ground.

The plates 47 and the strips 48 are imbedded in plaster 49 upon the table in the usual manner. The strips 48 are ordinarily of reduced thickness at their outer edges, or of partially bevelled form, in their natural condition, so that the runners will move over the same smoothly, but even if the strips were of uniform thickness, cracks formed therein would not pass beyond the plaster joint 49ª, between adjacent edges of the sheets 47 and the strips 48.

In addition to serving as buffers to prevent chipping and cracking of the sheets of glass, the strips serve as "out riders" that permit overlapping of the runners further beyond the edges of the sheets, thus making it possible to secure more even zoning of grinding action than where the projection of the runners beyond the edges of the sheet must be restricted.

The arrangement shown in Figs. 4 to 6 is of utility also in connection with the polishing of glass, because, ordinarily, those portions of the plates which are near the edges are under polished relative to those portions thereof removed from the edges, with the result that either the polishing of the mid portion of the glass has to be carried on for an excessive period of time to permit bringing of the edge portions to the proper condition, or the edge portions have to be trimmed off and thrown away. In either case, a loss is sustained. By providing strips 48, the polishing runners may safely be permitted to overlap or project beyond the edges of the sheet of the plate to such degree that the edge portions thereof will be properly polished, simultaneously with the polishing of its mid portion, because the strips afford a support for the projecting portion of the runner.

I claim as my invention:—

1. The method which comprises increasing the temperature of a plate of glass, polishing the same, shielding the glass from air currents during polishing, and retarding radiation of heat therefrom after completion of the polishing operation.

2. The combination with a polishing device and means for advancing a plate of glass past the same, of a heating member disposed in advance of the polishing device, a hood for shielding the glass while being operated upon by the polishing device, and a hood positioned to control radiation of heat from the glass after it has been polished.

3. The method which comprises subjecting a sheet of glass in a heated condition to the action of a polisher which has frictional rubbing contact with the glass and generates heat therein to polish the same, and thereafter retarding radiation of heat from the glass.

4. The method which comprises increasing the temperature of a plate of glass to a point approaching polishing temperature, subjecting it to the action of a polisher which has frictional rubbing contact therewith and generates further heat therein, and thereafter retarding radiation of heat from the glass.

5. The method which comprises subjecting

a sheet of glass in a heated condition to the action of a polisher which has frictional rubbing contact with the glass and generates heat therein to polish the same, and thereafter retarding radiation of heat from the glass by passing the glass in position beneath a hood.

Signed at Pittsburgh, Pa., this 29th day of April, 1927.

GEORGE E. HOWARD.