April 30, 1929. A. VUCCINO 1,711,368

METHOD OF PACKING CIGARETTES

Filed May 5, 1927 2 Sheets-Sheet 1

Fig. 1.

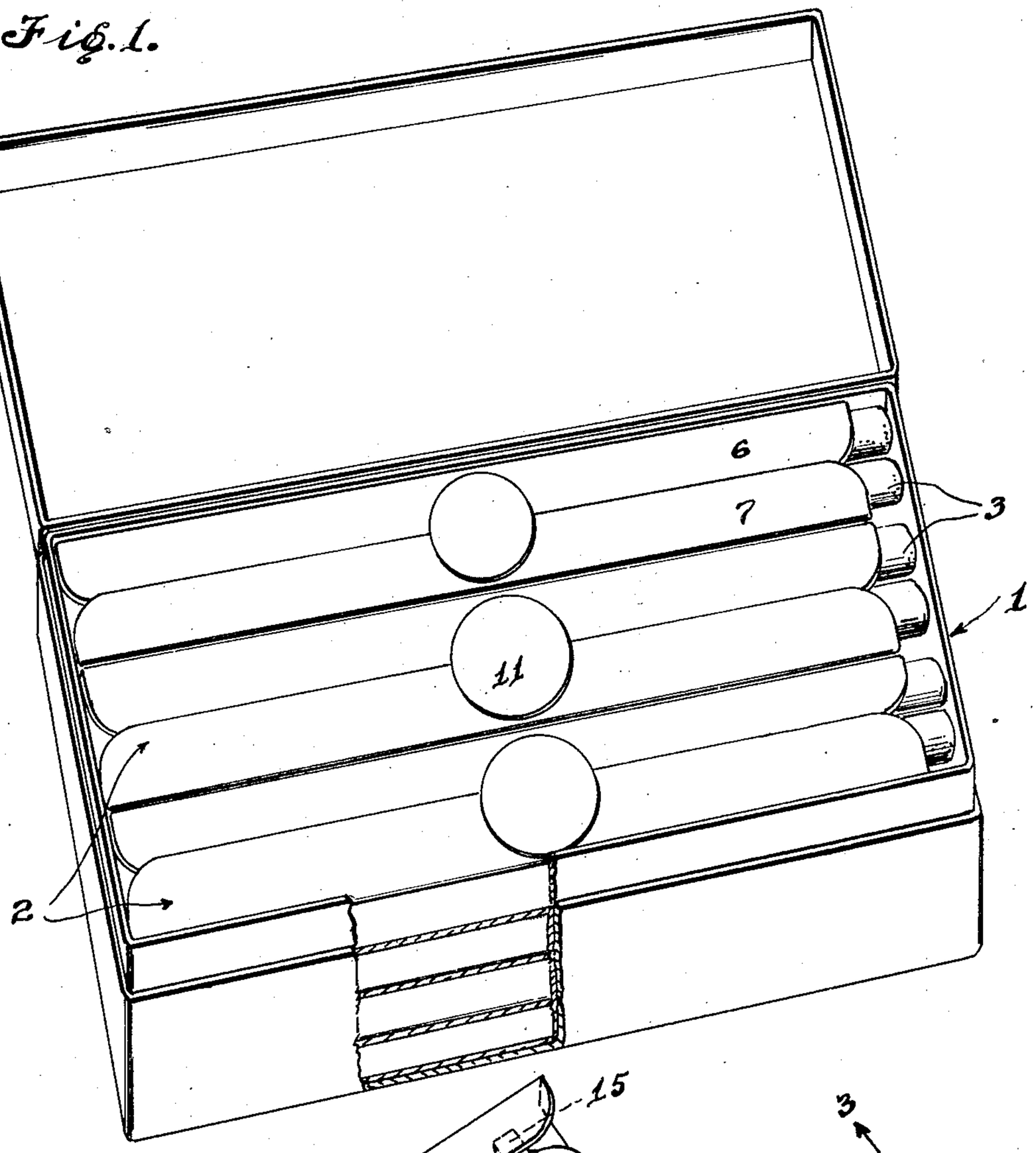

Fig. 7.

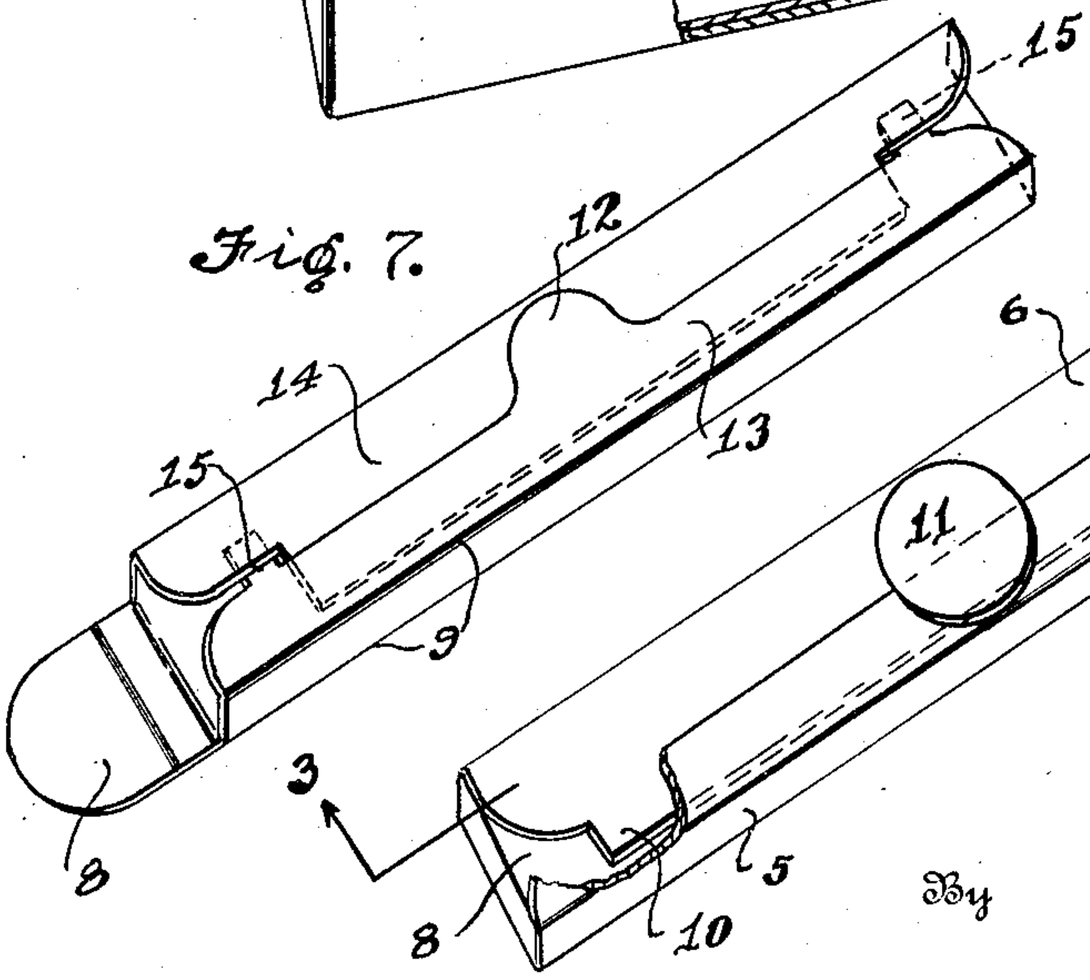

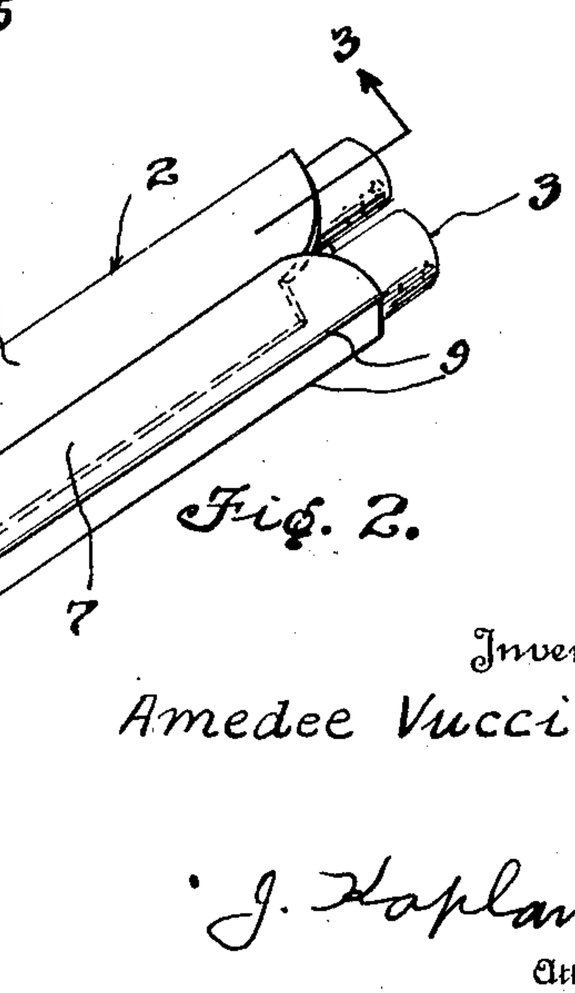

Fig. 2.

Inventor
Amedee Vuccino

By J. Kaplan
Attorney

April 30, 1929. A. VUCCINO 1,711,368

METHOD OF PACKING CIGARETTES

Filed May 5, 1927 2 Sheets-Sheet 2

Fig. 3.

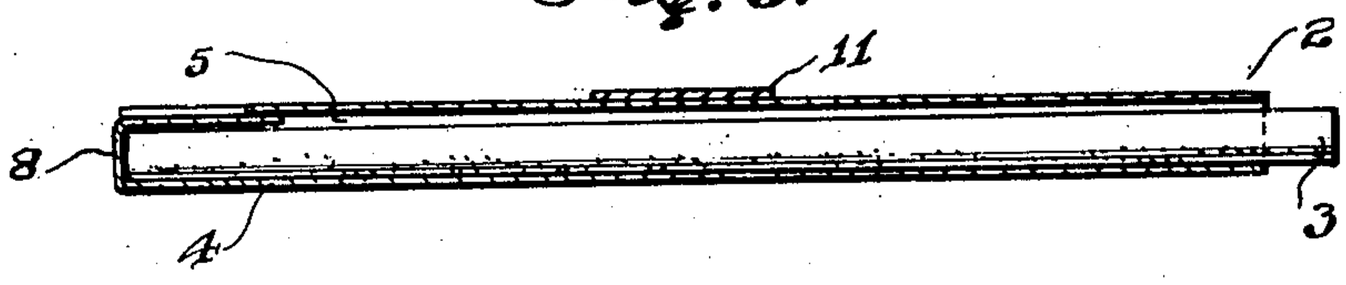

Fig. 4.

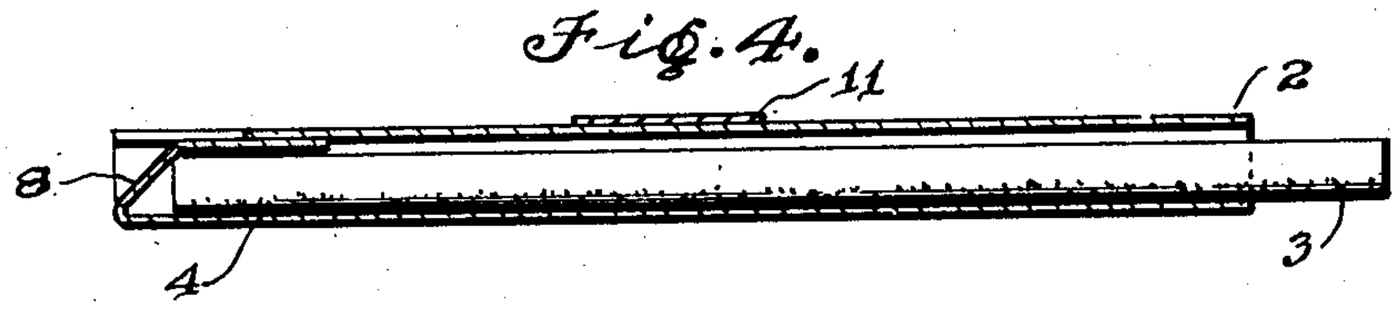

Fig. 5.

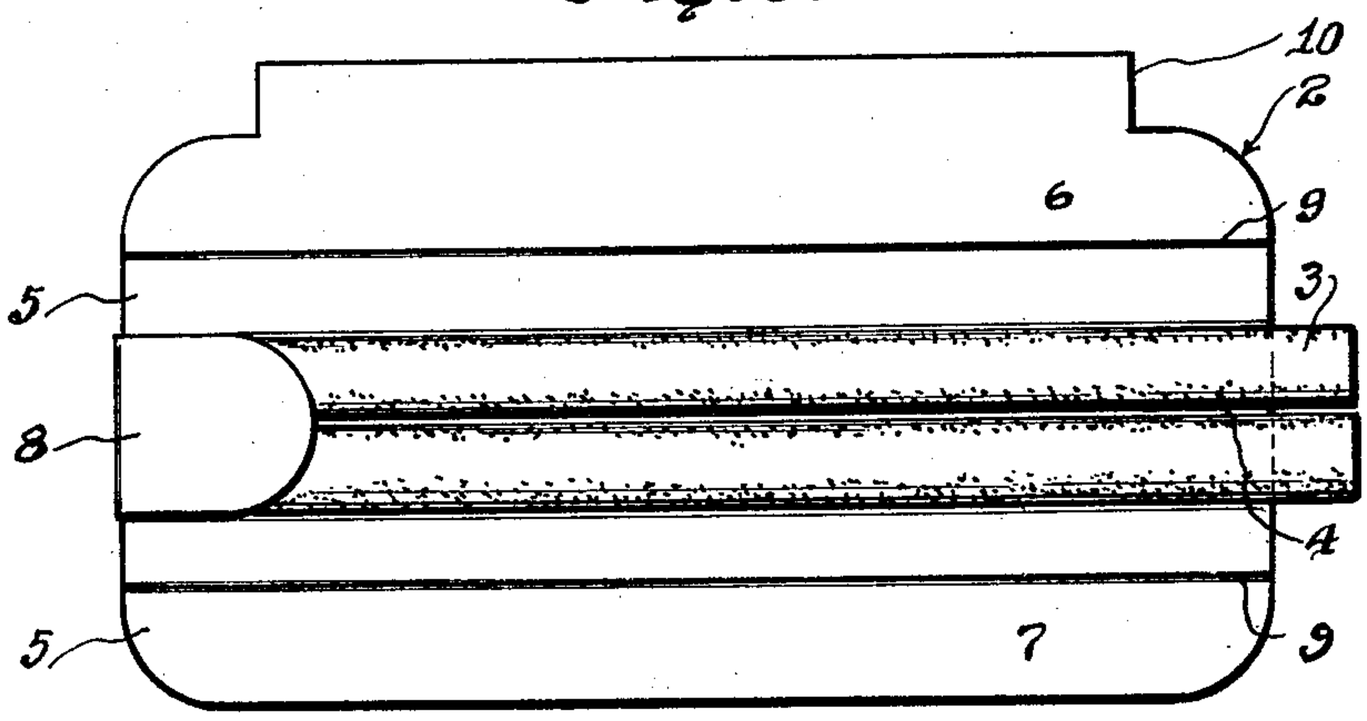

Fig. 6.

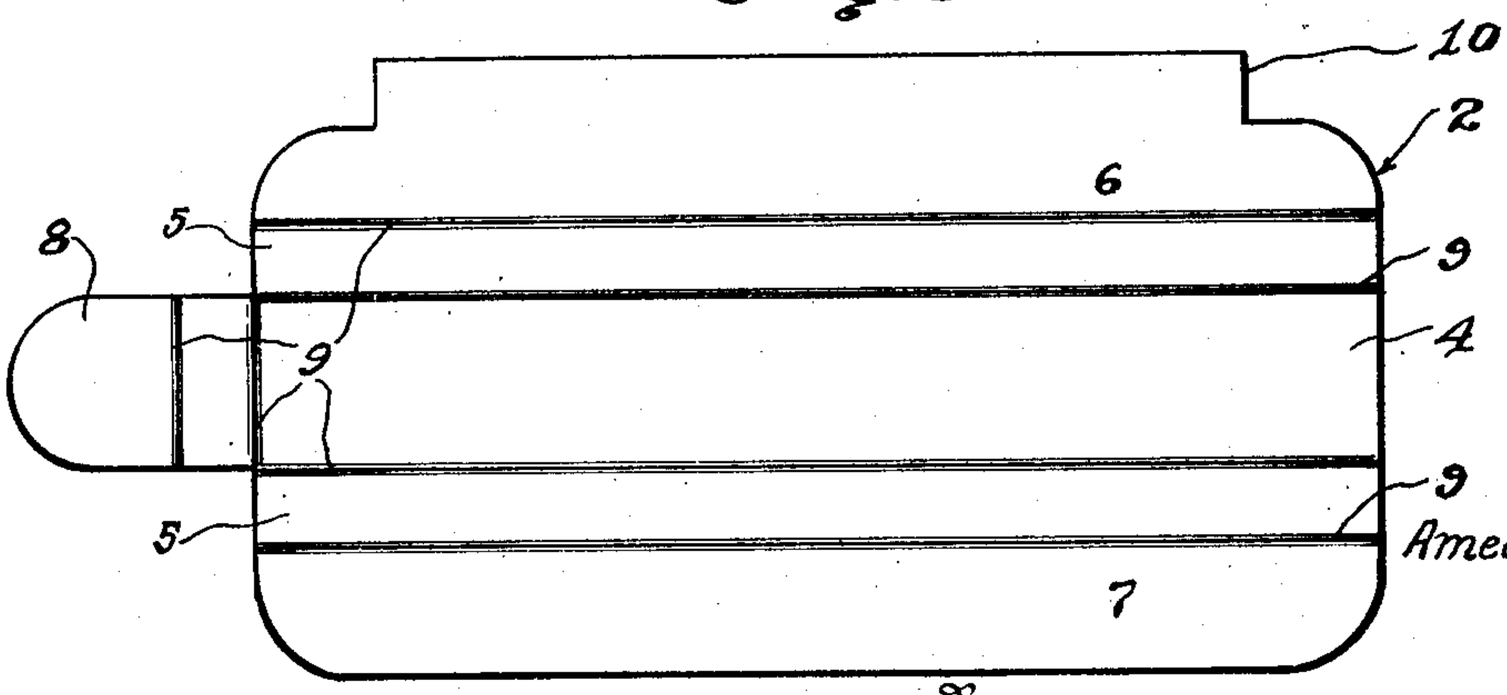

Inventor
Amedee Vuccino

By

J. Kaplan
Attorney

Patented Apr. 30, 1929. 1,711,368

UNITED STATES PATENT OFFICE.

AMEDEE VUCCINO, OF NEW YORK, N. Y.

METHOD OF PACKING CIGARETTES.

Application filed May 5, 1927. Serial No. 188,998.

This invention relates to a method of packing cigarettes or the like.

The principal object of the invention is to provide a package for packing and vending cigarettes in a sanitary and convenient manner and which will keep the cigarettes in good condition and without being broken when placed in the pocket of the purchaser.

Other objects will appear as the disclosure progresses. The drawings are intended merely to indicate a possible embodiment of the invention. It is obvious that the actual needs of manufacture may necessitate changes. It is therefore not intended to limit the invention to embodiment illustrated but rather to define such limits in the appended claim.

For a more general understanding of the invention attention is now called to the drawings.

Figure 1 is a perspective view of a box containing the packaged cigarettes.

Fig. 2 is a perspective view of an individual package containing two cigarettes.

Fig. 3 is a sectional view on line 3—3 of Fig. 2.

Fig. 4 is a similar view as Fig. 3 showing the cigarette partly ejected from the package.

Figs. 5 and 6 are views showing the package in an open position.

Fig. 7 is a perspective view of a modified form of the package.

Referring to the drawings in detail in which like numerals denote like parts throughout the specification, numeral 1 designates a box containing the packaged cigarettes, 2 the packages and 3 the cigarettes contained therein.

As noted in Figs. 4 and 5 the packages consists of a bottom member 4 wide enough to accommodate two cigarettes, side wall members 5, top flaps 6 and 7 and an end flap 8, all separated or defined by scorings 9. The flap 6 is provided with an extension 10 which fits underneath the flap 7. The packages are shorter than the length of the cigarettes so the ends thereof can protrude from the packages.

For sealing the package a seal 11 is provided. For ejecting the cigarettes the end flap is pushed inwardly and thereby moves the cigarettes partly out of the package so they can be conveniently gripped by the hand.

In Fig. 7 is shown a modified form of the package where the seal 12 is made integral with the flap 13 and is adapted to be pasted over the flap 14. In addition a pair of tabs 15 are provided which fit underneath the flap 14 and thereby lock the ends of both flaps together.

It will thus be seen that I have provided a convenient, sanitary and efficient way to pack and vend cigarettes. The material of the package, being of tough cardboard, will protect the cigarettes from being broken when kept in a pocket of the purchaser.

Having described my invention I claim:

In a receptacle for packing and vending cigarettes consisting of a bottom member wide enough to accommodate two cigarettes, side wall members substantially as deep as the thickness of a cigarette, top flaps, one of said flaps being wider than the other flap, the added width of both flaps being greater than the width of the said bottom member so the said wide flap will be underneath the other of said flaps, the said wide flap having narrowed end portions which are as wide as one half the width of the said bottom member, the other of said flaps having tabs at each end thereof and said tabs extending outward of said other flap and underneath the said narrowed portions of the wide flap.

In testimony whereof I affix my signature.

AMEDEE VUCCINO.